July 7, 1959 V. G. SHARPE 2,893,726

REFRIGERATOR DOOR CONTROL

Filed July 19, 1956 2 Sheets-Sheet 1

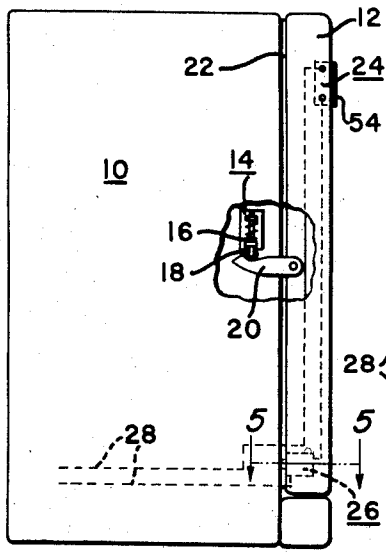

Fig. 1

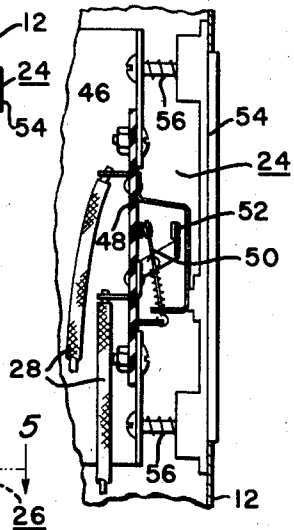

Fig. 3

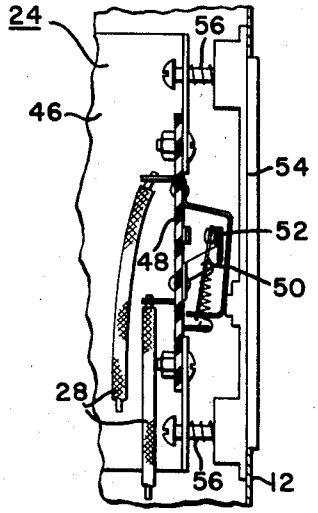

Fig. 4

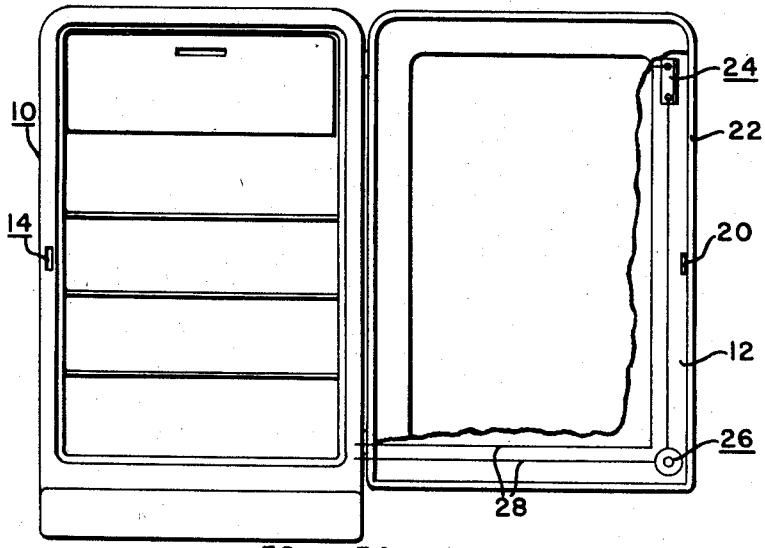

Fig. 2

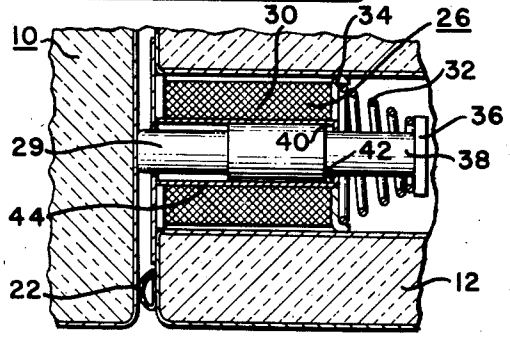

Fig. 5

INVENTOR.
Verlos G. Sharpe
BY Edwin S. Dybvig
His Attorney

July 7, 1959 V. G. SHARPE 2,893,726

REFRIGERATOR DOOR CONTROL

Filed July 19, 1956 2 Sheets-Sheet 2

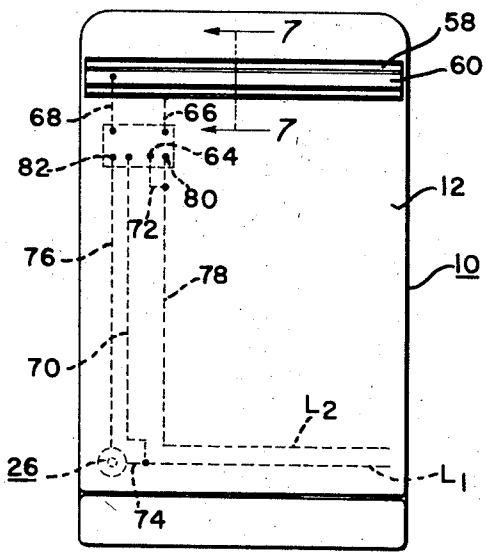

Fig. 6

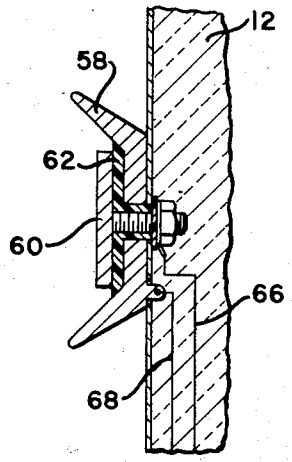

Fig. 7

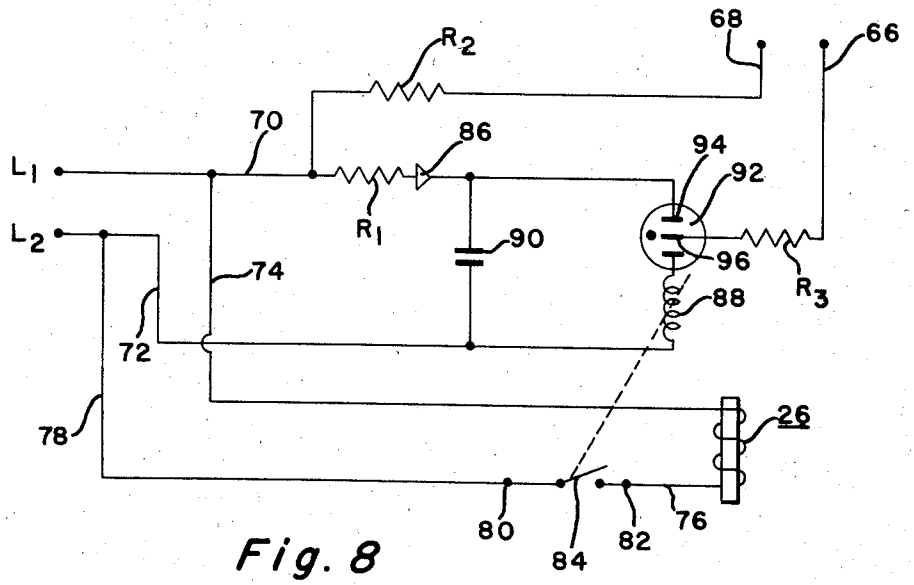

Fig. 8

INVENTOR.
Verlos G. Sharpe
BY Edwin L. Rybnig
His Attorney

United States Patent Office 2,893,726 Patented July 7, 1959

2,893,726

REFRIGERATOR DOOR CONTROL

Verlos G. Sharpe, Dayton, Ohio, assignor to General Motors Corporation, Detroit, Mich., a corporation of Delaware

Application July 19, 1956, Serial No. 598,877

1 Claim. (Cl. 268—72)

This invention relates to a domestic appliance and more particularly to a door actuating mechanism for a refrigerator.

An object of the invention is to provide means for opening a refrigerator door in response to the closing of an electrical switch located without the interior of the refrigerator cabinet.

Another object is to provide means for opening a refrigerator door in response to the bridging of a pair of metallic parts located without the refrigerator cabinet with an electrical resistance having a relatively high value.

A more specific object is to provide a refrigerator with friction catch means for holding the refrigerator door closed, and with a solenoid connected between the door and refrigerator cabinet for opening the door against the bias of the friction catch means, the solenoid being connectable with a voltage supply by a switch located without the interior of the refrigerator cabinet.

Further objects and advantages of the present invention will be apparent from the following description, reference being had to the accompanying drawings, wherein a preferred form of the present invention is clearly shown.

In the drawings:

Figure 1 is a side view of a refrigerator showing the electrical connections for the door actuating means of this invention and showing the friction catch means for the refrigerator door;

Figure 2 is a front view of a refrigerator with the refrigerator door open, showing the electrical connections for actuating the door opening means of this invention;

Figure 3 is an enlarged side view of a switch that is used to connect a door actuating solenoid of this invention with a voltage supply, the switch being in the open position;

Figure 4 is an enlarged side view of the switch of Figure 3 with the switch shown in the closed position;

Figure 5 is an enlarged sectional view taken along line 5—5 of Figure 1;

Figure 6 is a front view of a refrigerator having a modified control circuit for the door opening mechanism;

Figure 7 is a sectional view taken along line 7—7 of Figure 6; and

Figure 8 is a schematic electrical illustration of a switch actuating circuit used in the modified door opening arrangement of Figure 6.

Referring now to Fig. 1, a refrigerator having a cabinet generally denoted by reference numeral **10** is shown provided with a door **12**. The door is held in a closed position by means of friction catch or detent means generally denoted by reference numeral **14**. The friction catch or detent means may include a spring-biased plunger **16** having a roller **18** that cooperates with a detent plate **20**. The detent plate **20** is recessed as shown, the recess cooperating with roller **18** to hold the door in sealing engagement with the cabinet **10** when the door is in a closed position. A sealing strip **22** of rubber or other

suitable material may be provided between the refrigerator cabinet **10** and door **12** to insure an air-tight fit therebetween. The door **12** carries an electrical switch generally denoted by reference numeral **24**. The electrical switch **24** is connected in series with a solenoid generally denoted by reference numeral **26**. The solenoid **26** and electrical switch **24** are connected to electrical lines **28** that are in turn connected to a conventional 110-volt voltage supply by means of suitable leads and an electrical plug connector (not shown).

The solenoid **26**, as more particularly shown in Fig. 5, comprises a plunger **29** that slides within a solenoid winding **30**. The solenoid plunger **29** is spring-biased to a retracted position by means of a spring **32** interposed between spring retainer **34** and a plunger abutment **36**. The solenoid plunger is reduced as at **38** and has a shoulder **40** that cooperates with a shoulder **42** formed on solenoid frame **44** to limit outward movement of plunger **29**. With this arrangement the solenoid plunger is normally held in a retracted position. When switch **24** is closed so as to energize the winding **30**, the plunger **29** moves leftwardly in Fig. 5 to open the door **12** of the refrigerator against the bias of friction catch device **14**. The opening force of the solenoid is preferably of a value just strong enough to overcome the spring bias of the friction catch device **14**.

The switch **24** is preferably mounted within the door **12** of the refrigerator so that the actuating touch plate **54** of the switch is substantially flush with the outer wall of door **12**. As more particularly shown in Figs. 3 and 4, the switch **24** comprises a main base portion **46** having flanged portions to which is attached an insulating block **48**. The insulating block **48** carries a conventional overcenter spring-type switch structure that includes a contact bar **50** that engages a contact **52** when the switch is in a closed position. The switch is shown in the open position in Fig. 3 and in the closed position in Fig. 4. The switch **24** is actuated by a touch plate **54** that extends longitudinally of the switch. The touch plate is secured to the flanged portion of the main base portion **46** and is spring biased away from the base portion by means of springs **56**. With this arrangement any leftward pressure on touch plate **54** at any point along the length of the touch plate will actuate the switch **24** to move the contactor **50** to the position shown in Fig. 4. When this happens, the solenoid **26** is energized and kicks the door open.

A modified arrangement for energizing a solenoid for opening a refrigerator door is illustrated in Figs. 6, 7 and 8. In this arrangement the solenoid is energized in response to the bridging of a pair of metallic parts with a high resistance. The two metallic parts are preferably secured to the refrigerator at some point without the interior of the refrigerator cabinet. The two metallic parts may be arranged as shown in Figs. 6 and 7 wherein an inner metal strip **58** is preferably secured to the outer face of refrigerator door **12** and extends laterally thereacross. A second metallic strip **60** is secured to the refrigerator door **12** and extends laterally across the front face of the refrigerator door. The metallic strips **58** and **60** are separated by an electrical insulator **62** that extends coextensively with the metallic strips **58** and **60**. The metallic strips **58** and **60** could be used as the decorative trim strip material for the door of the refrigerator.

The metallic strips **58** and **60** are connected with a switch-box arrangement **64** by means of leads **66** and **68**. The switch-box **64** contains mechanism that operates to complete a circuit to solenoid **26** when the metallic strips **58** and **60** are bridged with an electrical resistance of a relatively high value. This bridging may take place by the user of the refrigerator bridging the plates

58 and 60 by touching the plates with the human hand or the like.

The switch-box 64 is shown in Fig. 6 and as shown schematically in Fig. 8, is connected with conventional power lines L_1 and L_2 by means of leads 70 and 72. The solenoid 26 is connected with line L_1 by means of a lead 74 and is connected to the switch box mechanism by means of a lead 76. The switch-box is connected with line L_2 by means of a lead 78 that is connected with a terminal post 80. The electrical line 76 is connected with a second terminal point 82, the terminal points 80 and 82 being bridged at times by a switch 84. With this arrangement the leads 70 and 72 supply power to the switching arrangement contained in switch-box 64 while the leads 76 and 78 are bridged at times by switch 84 to complete a circuit for solenoid 26.

The switch-box 64 contains the mechanism shown schematically in Fig. 8. Thus, the line 70 is connected with a resistor R_1 and with a dry disk rectifier 86. The line 70 is also connected through a resistor R_2 with electric leads 68 that is connected with metal strip 58. The electrical line 72 is connected with a relay 88 that operates to close switch 84 when the relay is energized. A condenser 90 is connected across lines 70 and 72 and is connected in parallel with a cold cathode gas tube 92 having a plate 94 and a firing electrode 96. The firing electrode is connected with a lead 66 through a resistor R_3. With this circuit arrangement the bridging or shorting of metallic plates 58 and 60 with a high resistance, places a relatively high resistance across lines 66 and 68. The insertion of a relatively high resistance between leads 66 and 68 raises the potential of the firing electrode 96 toward that of anode 94, thus causing the tube to fire and causing the condenser 90 to discharge through the gas tube 92. The discharge of condenser 90 causes current to flow through relay 88 to temporarily close switch 84 during the period in which current is flowing through relay 88. Closing of switch 84 in response to the energization of relay 88 makes a circuit for solenoid 26 through lines 74 and 78 thereby energizing solenoid 26 to open door 12 against the spring bias of latch mechanism 14.

It will be apparent from the foregoing that all that is needed to open the refrigerator door with the arrangement shown in Figs. 6, 7 and 8 is a touching by the user of the metallic plates 58 and 60. It is also apparent that the circuit arrangement shown in Fig. 8 might take various forms as long as the circuit responds to the bridging or shorting of the metal plates 58 and 60 with an electrical resistance of a relatively high value.

While the form of embodiment of the invention as herein disclosed constitutes a preferred form, it is to be to be understood that other forms might be adopted, as may come within the scope of the claim which follows.

What is claimed is as follows:

A refrigerator comprising, a cabinet having an opening, a door provided with an elastic door seal about its periphery arranged to engage the front of said cabinet for closing said opening, yieldable holding means associated with said door and cabinet for yieldably holding said door in engagement with said cabinet and for compressing said door seal when said door is in a closed position, a solenoid having a movable actuating part associated with said door and cabinet, said solenoid operating when energized to overcome said yieldable holding means and to move said door toward an open position thereby releasing said holding means, the elastic compression of said door seal assisting said solenoid in the opening of said door, and switch means for connecting said solenoid with a voltage supply, said switch means including a pair of metal parts located without the interior of said cabinet and actuating means actuated by the bridging of said metal parts with a resistance having a relatively high value.

References Cited in the file of this patent

UNITED STATES PATENTS

647,061	Woodcock	Apr. 10, 1900
725,552	Gerald	Apr. 14, 1903
1,089,963	Reinert	Mar. 10, 1914
2,096,902	Lamb	Oct. 26, 1937
2,186,825	Dome	Jan. 9, 1940
2,601,983	Schoelkopf	July 1, 1952