(19) DANMARK

(10) **DK/EP 2710351 T3**

Patent- og
Varemærkestyrelsen

(12) Oversættelse af
europæisk patentskrift

(51) Int.Cl.: ***G 01 N 21/64 (2006.01)***

(45) Oversættelsen bekendtgjort den: **2021-03-15**

(80) Dato for Den Europæiske Patentmyndigheds
bekendtgørelse om meddelelse af patentet: **2020-12-16**

(86) Europæisk ansøgning nr.: **11815551.4**

(86) Europæisk indleveringsdag: **2011-12-28**

(87) Den europæiske ansøgnings publiceringsdag: **2014-03-26**

(86) International ansøgning nr.: **FR2011053208**

(87) Internationalt publikationsnr.: **WO2012089987**

(30) Prioritet: **2010-12-29 FR 1061349**

(84) Designerede stater: **AL AT BE BG CH CY CZ DE DK EE ES FI FR GB GR HR HU IE IS IT LI LT LU LV MC MK MT NL NO PL PT RO RS SE SI SK SM TR**

(73) Patenthaver: **Genewave, Immeuble Le Dorian, Bât 2B, 172 Rue de Charonne, 75011 Paris, Frankrig**

(72) Opfinder: **WEISBUCH, Claude, 11 rue Simonet, F-75013 Paris, Frankrig**
**MARTINELLI, Lucio, 22 rue Dussoubs, F-75002 Paris, Frankrig**
**BENISTY, Henri, 17 rue du Trésor, F-91120 Palaiseau, Frankrig**
**SCHAFAUER, Christof, 93 Rue Compans, F-75019 Paris, Frankrig**
**SAGARZAZU, Gabriel, 1 allée de Caparocenia, F- 64500 Ciboure, Frankrig**
**GACOIN, Thierry, 4 Rue de Gometz, F-91440 Bures Sur Yvette, Frankrig**
**BEDU, Mélanie, Appt 606, Bât. B 6 Impasse du Ramier des Catalans, F-31000 Toulouse, Frankrig**

(74) Fuldmægtig i Danmark: **Chas. Hude A/S, H.C. Andersens Boulevard 33, 1780 København V, Danmark**

(54) Benævnelse: **BIOCHIPINDRETNING**

(56) Fremdragne publikationer:
**DE-A1- 19 611 025**
**FR-A1- 2 832 506**
**FR-A1- 2 846 745**
**FR-A1- 2 892 196**
**FR-A1- 2 932 885**
**US-A1- 2001 003 043**
**US-B1- 6 620 623**
**SAGARZAZU G ET AL: "Quantitative analysis of enhanced light irradiance in waveguide-based fluorescent microarrays", BIOSENSORS AND BIOELECTRONICS, vol. 24, no. 7, 15 mars 2009 (2009-03-15), pages 2281-2284, XP025959015, ELSEVIER BV, NL ISSN: 0956-5663, DOI: 10.1016/J.BIOS.2008.11.001 [extrait le 2009-02-23]**
**SCHMITT K ET AL: "Optical Guided-wave Chemical and Biosensors I, High-Refractive-Index Waveguide Platforms for Chemical and Biosensing", 1 janvier 2010 (2010-01-01), OPTICAL GUIDED-WAVE CHEMICAL AND BIOSENSORS I; [SPRINGER SERIES ON CHEMICAL SENSORS AND BIOSENSORS ; 7], SPRINGER,**

**Fortsættes ...**

HEIDELBERG [U.A.], PAGE(S) 21 - 54, XP002655410, ISBN: 978-3-540-88241-1 alinéa [0006] - alinéa [0009]; figures 1-3,8,15
Mélanie Bedu: "Développement de guides d'ondes planaires de TiO2 optiquement actifs pour biopuces Ã ondes évanescentes", THESE DE DOCTORAT , 1 mars 2010 (2010-03-01), page 200PP, XP002675840, Ecole Normale Superieure de Cachan, France Extrait de l'Internet: URL:http://tel.archives-ouvertes.fr/docs/00/46/23/82/PDF/Soutenance_Melanie_Bedu.pdf [extrait le 2012-05-15]

# A BIOCHIP DEVICE

The invention relates to a biochip device for analyzing biological molecules by fluorescent marking.

In such devices, a substrate includes pads constituted by probe molecules capable of hybridizing in preferential manner with target molecules contained in a hybridizing solution obtained from a sample to be analyzed. The target molecules are marked with the help of chromophore elements capable of emitting fluorescence, the wavelength of which depending on the nature of the chromophore elements, when they are excited by appropriate light.

After hybridizing, the biochip is dried and illuminated with a light source at the excitation wavelength of the chromophores marking the target molecules, and an image of the fluorescence of the biochip is picked up with the help of appropriate optics. In the image obtained in this way, the intensity of each point is related to the quantity of chromophores present at the corresponding point of the biochip and thus related to the number of target molecules that have been selectively fixed at that point during the hybridizing stage, thus making it possible to obtain information about the biological species content of the hybridized solution.

That type of sequential reading of the fluorescence of the biochip after hybridizing is nevertheless unsuitable for performing real time reading of the hybridizing signal since the stages of hybridizing and of imaging are spaced apart in time, and take place in separate hybridizing and reading devices.

Certain devices are capable of integrating the hybridizing and the reading stages, and thus make it possible to detect the signal in real time during the hybridizing stage (see in particular Y. Marcy, P.-Y. Cousin, M. Rattier, G. Cerovic, G. Escalier, G. Bena,vM. Gueron, L. McDonagh, F.L. Boulaire, H. Benisty, C. Weisbuch, J . -C. Avarre, "Innovative integrated system for real time measurement of hybridization and melting on standard format microarrays" Biotechniques 44, 2008, 913). The image of the fluorescence of the pads carrying the hybridized molecules is acquired in the presence of the hybridizing liquid containing the target molecules that are marked, and thus fluorescent, which may be present in

high concentration. Fluorescence is then observed coming both from the target molecules attached to the pads of probe molecules (forming the useful signal) and from fluorescent molecules in the solution (constituting a background signal that is added to the useful signal).

That is disadvantageous, since the strong background signal generated by the fluorescent species in solution limits the sensitivity the detection of the attachment of target molecules and limits the dynamic range of the hybridization measurement.

In order to avoid that drawback, one possibility consists in selectively exciting the molecules at the surface of the biochip without exciting the molecules present in the solution, by using an evanescent wave at the surface of the biochip so as to excite only the fluorescent pads (one technique often used for that purpose is a configuration of the total internal reflection fluorescence (TIRF) type) Other evanescent wave excitation methods consist for example in using substrates carrying a waveguide, preferably a monomode waveguide, and in exciting one or more modes in the waveguide with the help of etched coupling gratings or in exciting guided modes in the biochip by illumination via an edge face (US2004/077099 Al).

One can find in the article “Optical Guided-wave Chemical and Biosensors I, High-Refractive-index Waveguide Platforms for Chemical and Biosensing” form Schmitt et al. published January 1, 2010 (2010-01-10), OPTICAL GUIDED-WAVE CHEMICAL AND BIOSENSORS I, pp. 21-54 a description of means for coupling external excitation light into a guiding optical structure et of the need for accurate coupling, guiding and collimating structures for the excitation light.

Document US6620623 teaches a lighting device wherein light entering the substrate of a biochip is transmitted through the edge of the biochip from a planar network of optical fibers, which requires the alignment of the network of optical fibers with the edge of the substrate. Light exiting the fibers is diffused by a diverging collimator towards the edge of the substrate so that the excitation is homogeneous and that excitation light propagates in the plane of the microarray substrate.

Document US2001/003043 teaches the excitation of a biochip substrate thanks to a collimated beam exciting through the edge of the substate the guided modes in the substrate, or the coupling to the guided modes of the substrate by a face thanks to a prism or a diffraction grating.

Document FR2846745 and Mélanie Bedu's PhD thesis ("*Développement de Guides d'ondes Planaires de $TiO_2$ Optiquement Actifs Pour Biopuces à Ondes Evenescentes*", Ecoles Normale Supérieure de Cachan, November 13, 2009) teaches the excitation of guided modes of a monomodal or multimodal waveguide which contains photoluminescent elements emitting at wavelengths able to excite the chromophore elements of the biochip. Excitation light is converted both in terms of wavelength and of directions by the photoluminescence phenomenon which is, roughly, isotropic. This photoluminescence thus excites guided modes in the waveguide. The excitation induced by the photoluminescence may be generated by a beam incident on the photoluminescent species without being accurately collimated, which is a definite advantage with respect to the above-mentioned techniques. On the other hand, this method has two drawbacks: the manufacturing of waveguides including photoluminescent species is expensive and the method lacks flexibility: photoluminescent species and chromophores are fitted together, as well as excitation light, which imposes that, for instance, once the waveguides are built with their fluorescent species, the chromophores used in the biochip have their excitation wavelengths nearly imposed. That also sets the excitation wavelength. Finally, the power of chromophores excitation is limited by the power tolerated by the photoluminescent species before bleaching.

In general, it is also necessary to take into consideration the interaction between the guided waves and the optofluidic portion of the device in contact with the waveguide.

For the above-mentioned evanescent wave devices, the light coupling requires to use excitation devices having demanding mechanical constraints in terms of precision.

That type of coupling makes it necessary either to use optical systems with sub-micrometer precision on polished edge faces for coupling the excitation light to a single mode, or to have recourse to beams that are collimated with very precise angles (a few milliradians
or less).

The present invention weans off the above-mentioned drawbacks. It is known that light incident on non homogeneous assemblies such as metallic or dielectric particles, or generally scatterers, allows exciting guided modes of any planar structure providing the elements of the scatterer are positioned very close to the waveguide, in the evanescent tail of the modes. This makes it possible to avoid the tight coupling tolerances encountered with the above-described devices. Such scatterers are referred to

herein as "*substantially non-directional means*" for generating or coupling guided modes".

The term "substantially non-directional coupling means" is used herein to designate means for coupling excitation light into the waveguide in the form of waves that are guided in a plurality of directions inside the waveguide by using excitation light coming from a plurality of directions. The coupling of excitation light with the waveguide may be performed by using an excitation light beam that is not necessarily collimated. With such coupling means, there is no longer any need for the beam to be oriented very precisely relative to the waveguide.

Such coupling means are known for waveguides and solar cells, for instance made of silicon. In those applications, a diffusing disordered interface serves to transform the incident light into guided light so that it is used in the waveguide or absorbed in the solar cell. For waveguide applications, the purpose is then to use the light in the waveguide so that it is absorbed therein, e.g. for use in a photodetector device. For solar cells, diffusion takes place over the entire surface of the cell in order to be able to capture all the light intercepted by the cell.

The invention aims at providing a simple solution to the above-mentioned problems of biochip-type devices known in the prior art.

To this end, the invention provides a biochip device as defined in claim 1.

Integrating substantially non-directional coupling means in a biochip device makes it possible to avoid the precision constraints encountered in the prior art.

In the invention, the coupling means cover only a portion of the biochip. In particular, those coupling means are placed at a distance from the fluidic or optofluidic portion so as to avoid extracting guided waves into the fluid containing fluorescent molecules, which is precisely what is sought to be avoided by exciting the fluorophores excited by the evanescent waves only.

In an advantageous configuration, the device includes mode filter means for eliminating from the waveguide guided modes having an effective index less than or equal to a predetermined threshold value, this threshold value being selected so that no guided mode escapes from the waveguide beyond the zone comprising the filter means.

A first drawback of approaches based on substantially non-directional coupling means lies in the low efficiency of the coupling of the exciting modes with the guided modes. In order to reach a given guided mode intensity, it is possible to use an exciting source that is more intense. Nevertheless, the main drawback with a multimode waveguide is that that type of method of exciting guided modes tends to excite modes regardless of their effective index. Yet, modes with the smallest effective indices correspond to modes that leave the waveguide and penetrate into the fluid or into the optofluidic portions, where they contribute to increasing the background signal.

Because the guided modes transfer a propagating flow into the fluid only on contact with the fluid or the optofluidic portion, the use of non-directional coupling means can advantageously be combined with filtering means that eliminate the annoying modes that are capable of interacting with the fluid or the optofluidic portion.

From a theoretical point of view, the condition for non-transfer of a guided mode at an interface is conventionally presented in an angular form (angle of incidence at the interface being greater than a critical angle), however, this condition can be expressed more fundamentally in the form of an effective index of the guided mode, which must be greater than that of the fluid or of the optofluidic portion.

Summarizing the above propositions, in the device of the invention, the coupling mechanical easiness is ensured by means for generating guided waves that are low directional, such as optical scattering media notably, whereas the mode filter means serve to selectively filter out those of the guided modes that can be extracted from the waveguide and thereby increase the interfering background signal. Thus, the guided modes of effective index that is less than that of the material of the hybridizing chamber and than that of the biological solution are filtered out before they reach the optofluidic zone and a fortiori before they reach the zone carrying the chromophore elements, thereby avoiding exciting chromophore elements free in solution and out of reach of the evanescent wave.

In a first embodiment, the filter means comprise an index-matching layer in contact with the waveguide and formed by a medium of index substantially equal to the predetermined threshold value so as to filter the guided modes of effective index less than the threshold value by extracting them, so that they do not reach

the zones comprising fluidic or optofluidic functions. The index- matching layer determines the above-mentioned threshold value below which all modes guided until there are extracted from the waveguide.

In a variant, the index-matching layer is interposed between the waveguide plate and an absorption bottom layer, the index-matching layer and the absorption layer extending along the entire length of the waveguide, the absorption layer having an index not less than that of the index-matching intermediate layer and presenting absorption at the excitation wavelength of the chromophores that is considerable at the scale of the light path between the coupling means and a zone of the waveguide carrying the chromophore elements.

In practice, the absorption layer has an absorption coefficient that is greater than or equal to 2/L, where L corresponds to the distance between the non-directional coupling means and the optofluidic portion, in order to guarantee sufficient absorption of the modes that are of index less than the predetermined threshold value. These modes are expected to propagate in this layer and present after a path length of about L transmission of less than exp(-2), which is approximately equal to 0.14. The waveguide plate and the index-matching layer make it possible with thicknesses known to the person skilled in the art to have at least one guided mode over at least a length L with an index $n_{eff}$ is greater than the desiredthreshold.

In another variant of this first embodiment, the filter means are carried by the waveguide and are located between a zone of the waveguide in which the guided waves are generated and a zone of the waveguide carrying the chromophoreelements.

Advantageously, absorption means or deflector means for absorbing or deflecting the guided modes extracted from the waveguide are placed on the index-matching layer, so that the extracted modes cannot reach the fluidic or optofluidic portions of the biochip.

By way of example, the absorption means consists in a wideband filter. The deflector means may consist in a prism or in a grating, these means being directly contiguous to the index-matching layer.

According to another characteristic of the invention, the index-matching layer and the absorption means or the deflector means extend along the waveguide over a distance that is longer than the length that makes it possible for the guided mode to be filtered that has the greatest effective index to interact at least once with the interface filtering the modes.

This distance is given by 2xextanθ, where e is the thickness of the waveguide and θ is the reflection angle inside the waveguide and relative to the normal of the waveguide. With such a minimum extent for the filter means, it is guaranteed that all of the guided modes of effective index less than the predetermined threshold value will undergo at least one refraction or one absorption or one deflection at the interface with the waveguide and will thus be extracted from the waveguide.

According to another characteristic of the invention, the mode filter means extend upstream from and outside the zone carrying the chromophore elements but also partly in said zone. This has the advantage of filtering photons that might have been diffused by the edges of the hybridizing chamber in the direction of guided modes in the waveguide of uncontrolled index that might subsequently leave the waveguide and excite the hybridizing solution.

Preferably, the threshold value is chosen to be greater than or equal to the greatest refractive index of the elements constituting the environment of the chromophores such as for example a hybridizing chamber placed on the substrate, and that are generally in optical contact and a hybridizing fluid contained in the chamber, thereby avoiding any guided modes of effective index less than the threshold value to be extracted from the waveguide and to propagate directly into the hybridizing fluid, or indirectly into the fluid via the material of the hybridizing chamber, and to excite the chromophores of target molecules that are not attached to probe molecules.

In practice, the threshold value lies in the range n=l.30 to n=l.45 since the refractive index of a hybridizing solution generally lies in the range n=l.3 to n=l.4 and the material constituting the chamber is usually polydimethylsiloxane (PDMS) for which n=l.42.

In a second embodiment, the filter means are formed by the plate carrying the chromophore elements and having top and bottom faces that diverge from each other going from the zone of the coupling means to downstream from the zone carrying the chromophore elements, so as to raise the smallest effective index in the light distribution on the occasion of each internal reflection. This thus corresponds to making the rays of the guided waves more oblique at their arrival in the optofluidic zone than the limit angle associated with the traverse in the fluid or in the material of the hybridizing chamber.

In this second embodiment, the structure is thus no longer planar but flared, with an angle α defined between the top and bottom faces of the above-mentioned plate. Thus, the angle of a guided mode therefore increases by 2 α at each rebound of the guided mode on the bottom face. Applying the laws of geometrical optics to the successive images coming from a point on the top surface readily shows that the smallest angle (corresponding to the lowest effective index) increases up to the limit of 90° as the source generating guided waves approaches the edge formed by the intersection between the top and bottom faces of the waveguide. There therefore exists an ideal position L' between that edge and the optofluidic system for placing the substantially non-directional couplingmeans.

In a particular version of this second embodiment, the top and bottom faces of the waveguide are plane and the non-directional coupling means are placed at one- fourth of the distance between an edge formed by the intersection of the top and bottom faces and the portion of the waveguide carrying the chromophore elements.

In a possible variant, only the top face need be plane, the bottom face being for example curved and concave.

Preferably, the excitation light coupling is performed by diffusion and generates guided modes that propagate in a plurality of directions inside the waveguide.

The guided waves may be generated by illuminating a diffusing structure formed in or on the waveguide, thereby making it possible to form guided waves that propagate in a plurality of directions inside the waveguide, and avoiding a subsequent step of making the guided light uniform in the plane of the waveguide.

Advantageously, the diffusing structure used for providing substantially

non-directional coupling is a structure with a disordered spatial distribution of index.

The diffusing structure may be formed by frosting with a typical grain size both in the plane of the waveguide and perpendicularly thereto in the range of 0.1 micrometers {µm} to 50 µm. The diffusing structure may also be formed by a layer deposited on a face of the waveguide, e.g. a layer of "Teflon" or of metallic or colloidal particles.

In a variant, the diffusing structure may comprise diffusing particles in a resin matrix, e.g. such as an acrylic resin, a glycerophthalic resin, or a polymer, which may be a fluoropolymer. In order to guarantee good diffusion of the excitation light by the diffusing structure, it is preferable for the matrix to have a refractive index that is less than that of the diffusing particles by at least $\Delta n=0.5$. It is thus preferable to use particles of high index, e.g. oxides such as $TiO_2$, $Ta_2O_5$, $BaSO_4$.

The diffusing structure may also be situated inside the waveguide and may be made in the form of microcavities having dimensions of the order of 0.1 µm to 40 µm, and preferably of the order of 0.1 µm to 30 µm. It may also be made in the form of local modifications such as locally forming of non-stoichiometric compounds of the SiOx type in glass, for example, or indeed in the form of molecular zones of phases different from the phase of the waveguide, e.g. ordered instead of amorphous, in particular. These stoichiometric changes or phase changes affect the index or the dielectric tensor of the diffusing structure. Such a diffusing structure may be made by localized energy delivery by using a laser focused on the point at which it is desired to form the diffusing structure.

In a second embodiment of the diffusing structure, the diffusing structure is deposited on a face of the waveguide and comprises a layer of fluorophore material and responds to light excitation by generating fluorescent light that propagates in turn in the waveguide in the form of waves having an evanescent portion.

The fluorophore materials may be of a very wide variety of kinds and in particular they may comprise quantum dots, organic fluorophores, or fluorophores based on rare earth or on luminescent ions.

Other advantages and characteristics of the invention will appear on reading the following description made by way of non-limiting example and with reference to the accompanying drawings, in which:

- Figure 1 is a schematic section view of a prior art biochip device;

- Figures 2 and 3 are schematic section views of a biochip device according to the invention including filter means integrated in the waveguide;

- Figure 4 is a schematic section view of a biochip device according to the invention in which the waveguide carries the filter means;

- Figures 5 and 6 are schematic section views of two variants of the Figure 4 device;

- Figures 7A, 7B, and 7C are schematic representations of the portion of the waveguide portion where the guided waves having an evanescent portion are formed; and

- Figures 8 to 13 show various setups enabling to generate guided waves in the waveguide with the device according to the invention.

Reference is made first to Figure 1, which shows a known prior art biochip device 10 comprising a substrate 12 including a top layer 14 forming a waveguide. An excitation light 16 is directed to coupling means 18, e.g. such as a grating formed on the surface of the waveguide so as to cause a guided wave to propagate inside the waveguide 14. At a distance from the grating 18, the waveguide 14 carries a hybridizing chamber 20 containing a solution 22 including target molecules marked by chromophore elements and suitable for hybridizing with probe molecules deposited on pads 24 on the surface of the waveguide 14.

Detector means are provided, for example on the face of the substrate 12 that is opposite to the one carrying the hybridizing chamber 20, and comprise a camera 26 such as a charge coupled device (CCD) or a complementary metal oxide on silicon (CMOS) camera and a filter 28 for rejecting the light for exciting the chromophore. In such a device, the evanescent portion of the guided wave excites the chromophores carried by the waveguide 14. Nevertheless, and as mentioned above, that type of device can be difficult to implement because of the difficulty of achieving appropriate optical coupling between the incident light and the waveguide, since the coupling requires great precision on the collimation angle of incidence of the excitation light if this coupling is performed by a resonant grating in conventional guided optics, or it requires submicron mechanical precision if the coupling is a direct coupling via the edge face. Furthermore, and above all when the waveguide is suitable for having a plurality of guided modes propagate therein, i.e. a waveguide typically having a thickness greater than the wavelength

of the guided waves for index steps of the order of 1, then guided waves having an effective index of less than the index of the elements surrounding the chromophores, such as the material of the hybridizing chamber 20 or the hybridizing solution 22, are extracted from the waveguide 14 and excite target molecules that are present in the hybridizing solution 22 but that are not attached to probe molecules. This results in a decrease in the signal-to-noise ratio when measurement of the luminescence emitted by the chromophores is performed in real time.

The device according to the invention proposes using coupling means 19 that are substantially non-directional and of dimensions that are not very critical (e.g. 0.1 millimeter mm to 10 mm) providing optical coupling between the light source and the waveguide so as to generate waves that are guided in a plurality of directions inside the waveguide, for example from an excitation light beam that is not collimated. Such coupling means may be for example a diffusing structure and they will be described in greater detail below in the following description.

Advantageously, those coupling means are combined with modal filtering means so as to extract from the multimode planar waveguide 14 the guided modes for which the effective index is less than or equal to a predetermined threshold value.

These filtering means may either be formed by the waveguide itself (Figures 2 and 3) or they may be carried thereby (Figures 4 to 6).

Reference is now made to Figure 2, which shows a stratified structure comprising three superposed layers, with the top layer 30 serving as a planar waveguide without absorption and having an index $n_1$. The second layer 32 is interposed between the top layer 30 and an absorption bottom layer 34. The index-matching intermediate layer 32 has an index $n_2$ substantially equal to the predetermined threshold index value.

In this embodiment, the top layer 30 has the coupling means 19 at one end and has an optofluidic portion 36 at another end. The intermediate and absorption layers 32 and 34 extend over the entire length of the guiding top layer 30 so as to perform filtering over the entire length L separating the substantially non-directional coupling means 19 and the optofluidic portion 36.

The index $n_3$ of the absorbent layer 34 is chosen to be greater than $n_2$, $n_1$ being sufficiently large and the thickness of the layer being appropriate in application of the rules of guided optics and given the contrast firstly with $n_2$ and secondly with the index n of the hybridizing solution 22, to be capable of accepting at least one mode of index higher than the desired threshold. The thickness $z_2$ of the intermediate layer of index $n_2$ is sufficient to ensure that this mode does not escape over the distance L: the exponential decay factor in $z_2$,f= exp[2xπ:x($z_2$ / λ) x $\sqrt{n_{eff}^2 - n^2}$ > 1 must be at least three times greater than the ratio L/$z_1$ of L to the thickness $z_1$ of the layer 30 of the index $n_1$ for the intermediate layer to play its role over the length L. The modes of index $n_{eff}$<$n_2$ are obliged to propagate in the absorbent third layer of thickness $z_3$ and to travel a distance of the order of L therein. It then suffices to provide this third layer 34 with an absorption coefficient $\alpha_3$ that is greater than 2/ L in order to attenuate the undesirable modes of index $n_{eff}$<$n_2$.

By way of example, these three stratified layers may be made of polymer. A typical index sequence may be $n_1$=1.55, $n_2$ =1.42, and $n_3$=1.55. The thicknesses may be $z_1$=5 µm to 50 µm for the layer 30, $z_2$ >3 µm for the layer 32, and $z_3$, greater than or equal to $z_1$ for the layer 34, e.g. being about 500 µm for a length L of 1 centimeter (cm).

The absorption may be obtained by means of an organic or inorganic dye dispersed in the third layer 34. In a practical case, in order to absorb the light at a wavelength of 532 nanometers (nm) that is used for exciting chromophores such as Cyanine 3, it is possible to perform doping with absorbents that are stable, such as $Fe^{3+}$ salts of iron.

Figure 3 shows a second embodiment of coupling means formed by the waveguide. In this embodiment, the top and bottom faces 38 and 40 of the waveguide 42 are plane and they diverge from each other going from the coupling means 19 up to the optofluidic portion 36, e.g. in the form of a wedge. The top and bottom faces 38 and 40 of the waveguide 42 form an angle α at the edge 44 where they intersect which is in the present case situated outside of the device. Such a waveguide 42 is referred to as a "wedge" waveguide. The rays coming

from the coupling means 19 that are reflected on the bottom face 40 of the waveguide 42 become more and more inclined relative to the top face 3 8 , by an angle 2α for each pair of reflections. This filtering is a "dynamic" filtering in which the energy of the modes is shifted to ever increasing effective indices as the light rays propagate. In order to understand the operation of such filtering, it is possible to make use of the laws of geometrical optics. It is thus possible to predict that the successive images 46 of the coupling means 19 are turned through successive angles of 2α on each pair of reflections and that they move away towards the edge 44 by following a semicircle centered on the edge 44. This implies a limit on the angle of incidence that can be achieved at the optofluidic portion, as a function of the two pertinent distances in the geometrical optics problem, namely L' corresponding to the distance of the edge 44 from the coupling means 19, and the distance L from the coupling means 19 to the optofluidic portion 36. Constructing a right-angled triangle ABC with A at the edge 44 and of radius L' shows that the minimum angle of incidence θ of a ray on the optofluidic portion is given by: $\sin(90°-\theta) = \cos\theta = L'/(L+L')$, since the right-angled triangle ABC has the angle 90°- θ at the vertex C. Determining this angle thus requires a minimum value for the effective index that is given by $n_{eff}=n\times\sin(\theta)$. In practice, **it** is desirable to aim for angles θ of the order of 70° ($n_{eff}$=l.41 for a waveguide material having an index of about n=l.5). This imposes the following ratio: $L/L' = 1/\sin(90°-\arcsin(n_{eff}/n))-1 = 2$. It should be observed that this result is independent of the angle α of the wedge. This angle may be chosen in practice to lie in the range 2° to 10°. The overall extent of the coupling means 19, e.g. diffusers, needs to be taken into account, b y seeking merely to ensure that the desired condition applies for the most unfavorable of the rays coming from said means, thus those from the source 19 that are the closest to the hybridizing chamber 20.

In other variants (not represented), the top and bottom faces may diverge from each other, but without being plane, as would be the case for example with curved concave faces. The top face may also be plane while the bottom face may be curved, for example curved concave.

In the embodiments shown in Figures 4 to 6, the filter means are carried by the waveguide and they are interposed between the coupling means 19 and the zone 36 of the waveguide 14 carrying the hybridizing chamber 20. Advantageously,

these means comprise an index-matching layer 48 in contact with the top surface 50 of the waveguide 52. This index-matching layer 48 is chosen so that its refractive index is equal to the predetermined threshold value (Figure 4).

Means 53 for absorbing or deflecting the guided modes that are extracted from the waveguide 52 are advantageously placed on the index-matching layer 48.

In a practical embodiment of the invention, the absorption means may, for example, comprise a filter 54 having a wide absorption spectrum that performs volume filtering of the guided wave. This type of filter is very suitable since it reflects only very little of the guided light waves at its interface with the index-matching layer 48 (Figure 5) The deflection means may, for example, comprise a prism 56 of index selected to deflect the extracted guided light waves as shown at 58 in Figure 6.

Because of the presence of an index-matching layer 48 between the coupling means and the zone 36 of the waveguide carrying the hybridizing chamber 20, the guided modes that are of effective index that is less than the index of the index-matching layer 48 are extracted from the waveguide and are refracted inside said layer. The presence of absorption means 54 or deflection means 56 on the index-matching layer 48 prevents from any reflection of the guided modes that have been extracted at the top interface of the index-matching layer 48, which would lead to the extracted guided modes being re-introduced into the inside of the planar waveguide 52.

In order to guarantee optimal filtering of the guided modes of effective index less than the predetermined threshold value, the index-matching layer 48 and the absorption means or the deflection means must extend between the zone 19 where the guided waves are generated and the zone 36 carrying the hybridizing chamber 20, over a distance that is greater than or equal to $2xe\tan\theta$, where e is the thickness of the waveguide and $\theta$ is the reflection angle inside the waveguide relative to the normal to the waveguide 52 for the guided mode for filtering that has the greatest effective index. In this way, it is possible to guarantee that all of the guided modes of effective index less than the predetermined threshold value will be subjected to at least one reflection at the interface between the waveguide 52 and

the index-matching layer 48.

In a variant, the filter means may also extend at least in part under the pads 24 in the hybridizing chamber so as to filter out the photons that the edges of the chamber might diffuse towards uncontrolled index modes of the waveguide that could then escape and excite the solution.

In an embodiment of the invention, the hybridizing chamber 20 is made of polydimethylsiloxane (PDMS) having a refractive index n=l.42, and the hybridizing solution 22 is water-based having an index of about n=l.33. Under such circumstances, the index-matching medium 36 is selected to have an index that is not less than the highest index in the environment of the chromophores, i.e. n=l.42.

In practice, the threshold index value will be chosen to lie in the range n=l.30 to n=l.45, which corresponds to the index values commonly encountered for the materials of the hybridizing chamber 20 and also for the hybridizing solution 20.

There follows a more detailed description of the means used for generating a plurality of guided waves inside the planar waveguide and having an evanescent portion for exciting the chromophore elements fixed to the pads 24.

In a first embodiment, the device has a diffusing structure formed in the waveguide or on the waveguide and that is to be illuminated by the excitation light.

This diffusing structure (Figures 7 and 8) presents a disordered spatial distribution of index so as to diffuse the excitation light into the waveguide in a plurality of directions. Such a structure makes it easier to convert the excitation light into guided light and with an efficiency that depends little on the excitation conditions, and notably on the angle of incidence. Thus, with such a diffusing structure, the angle of tolerance is quite large, being about 10degrees, which does not require a high precision mechanical and optical setup, as compared with tolerance of about 0.1 degrees when using a grating 18.

This diffusing structure may be situated on one or other of the faces of the waveguide 14 that is transparent to the excitation light 16.

In a first embodiment of the diffusing structure 60, it is constituted by a layer deposited on the waveguide and presenting an internal structure that is disordered.

The layer may consist in a deposit of metallic or colloidal particles 60 (Figure 7A), or a deposit of"Teflon"(polytetrafluoroethylene).

It is also possible to deposit a layer 62 made up of a matrix containing diffusing particles 64 (Figure7B). The matrix may consist in a resin of the same type as that used for paints or varnishes, such as for example acrylic resins or glycerophthal resins or fluoropolymers.

In order to guarantee a good conversion of the excitation light 16 into guided waves for small thicknesses for the diffusion layer, i.e. a diffusion layer with a thickness of about 15% to 60%, it is desirable for the refractive index of the matrix to be less than the index of the diffusing particles 64 by at least $\Delta n=0.5$.

A diffusing structure 66 may also be obtained by making microcavities, for example spheroidal microcavities, inside the waveguide 14 or by locally modifying the material of the waveguide 14 by changing its degree of oxidation or by changing its phase, from amorphous to crystalline or from crystalline to amorphous, e.g. by means of laser pulses having a duration lying in the range 0.1 picoseconds (ps) to 1 microsecond (μs) with typical energy lying in the range 1 nanojoule (nJ) to 100 to microjoules(μJ). This type of structure thus presents index discontinuities suitable for diffusing the excitation light in a plurality of directions. There also exist methods of nucleating pores in a sol-gel phase, and these methods are often used for making layers of low dielectric constant in microelectronics.

In another embodiment of a diffusing structure, it consists in a layer 68 of fluorescent and diffusing material such as the phosphors of white light-emitting diodes (LEDs) that respond to light excitation by generating guided waves having an evanescent portion and propagating in a plurality of directions.

The fluorescent material may consist in an ordered or disordered layer of fluorophores, such as notably those based on quantum dots, organic fluorophores, or fluorophores based on rare earth.

The layer of fluorescent material may also consist in a layer comprising a binder such as an organic or inorganic powder with grain size lying in the range 0.1 μm to 50 μm or a polymer matrix belonging to the families used for makeup and for paint and varnishes, such as acrylic resins, glycerophthalic resins, etc., and fluorophore elements such as those described in the paragraph above.

The layer of fluorescent material may also include diffusing elements of the high-index particle type (e.g. oxides of titanium or carbonates of calcium or barium sulfate) and fluorophores such as those mentioned above.

With the diffusing structure made in these ways, the process of creating guided light waves possessing an evanescent portion may be thought of as emitting a set of optical dipoles at the surface of the waveguide or inside it. With a diffusing structure as shown in Figures 7A, 7B, and 7C, these dipoles oscillate at the same frequency as the excitation light 16, and with a structure that diffuses by fluorescence, the dipoles oscillate after frequency conversion at the frequency at which the fluorophores fluoresce. Under the latter circumstances, the fluorescence frequency is chosen so as to be suitable for exciting the chromophores carried by the pads 24.

The excitation of the diffusing structure by transmission of the excitation light 16 may be performed either directly or indirectly, as shown in Figures 8 to 13.

Figure 8 shows excitation of the diffusing structure by transmission of the excitation light 16 through the diffusing structure 68. This is possible only when the diffusing structure 68 presents little opaqueness in order to avoid the excitation light 16 being absorbed by the diffusing structure 68.

Figure 9 shows the diffusing structure being excited by the excitation light 16 being transmitted through the thickness of the waveguide.

In another configuration, shown in Figure 10, a prism 72 may be optically coupled to the waveguide 52 via an index-matching layer 74. It is also possible for the prism 72 to be integrated with the waveguide 52 by molding. The excitation light 16 is thus deflected by the prism into the inside of the waveguide and it excites the diffusing structure 70.

In a similar embodiment, shown in Figure 11, a chamfer 76 is made at the end of the waveguide that carries the diffusing structure 70. For the two embodiments shown in Figures 10 and 11, the excitation light 16 is oriented parallel to the plane of the waveguide towards the sloping surface of the prism 72 or 10 of the chamfer 76. The light 16 is then deflected towards the diffusing structure 70 in order to

generate guided light waves having an evanescent portion.

In the embodiment of Figure 12, the diffusing structure 70 is carried by the chamfered surface 62 of the waveguide and the excitation light may be at any orientation relative to the plane of the waveguide carrying the pads 24. The excitation light 78 may thus be oriented perpendicularly to the plate or it may be inclined relative to the vertical direction to the plate (as shown at 80). It passes through a portion of the waveguide to then come and illuminate the diffusing structure. The excitation light 82 may also excite the waveguide by diffusion/transmission through the diffuser 70.

In a last embodiment shown in Figure 13, the excitation light 16 is transmitted to the diffusing structure 70 through the polished or unpolished edge face of the waveguide 14.

## PATENTKRAV

**1.** Biochipindretning der omfatter et substrat (12), som består af mindst et lag (52) af et materiale, der danner en multimode bølgeleder og som bærer chromofore elementer, der er egnede til at udsende fluorescens som reaktion på excitation af bølgeledere, der har en evanescent del, **kendetegnet ved, at** den omfatter koblingsmidler (19) til at koble et eksternt excitationslys for chromoforerne sammen med bølgelederen i form af ledende bølger, hvilke koblingsmidler i det væsentlige er ikke-retningsbestemte, således at det eksterne excitationslys spredes i et antal retninger inden i bølgelederen, når det eksterne excitationslys for chromoforerne kommer fra et flere retninger.

**2.** Indretningen ifølge krav 1, der omfatter midler til filtrering af modes for at eliminere de ledende modes af bølgelederen, der har et effektivt indeks, som er mindre end eller lig med en forudbestemt tærskelværdi.

**3.** Indretningen ifølge krav 2, hvor filtermidlerne omfatter et indeksmatchende lag (32, 48), der er i kontakt med bølgelederen (30, 52) og som er dannet af et indeksmedium, der i det væsentlige er lig med den forudbestemte tærskelværdi for således ved ekstraktion at filtrere de ledende modes, der har effektive indeks, som er mindre end tærskelværdien.

**4.** Indretningen ifølge krav 3, hvor det indeksmatchende lag er anbragt mellem bølgelederlaget (30) og et nedre absorptionslag (34), hvilket indeksmatchende lag (32) og absorptionslaget (34) strækker sig i det væsentlige langs længden af bølgelederen (30), hvilket absorptionslag (34) har et indeks, der er mindst lig det for det indeksmatchende mellemlag, og som udviser en betydelig absorption ved excitationsbølgelængden for chromoforerne ved skalaen for lysvejen mellem koblingsmidlerne og en zone af bølgelederen, der bærer de chromofore elementer.

**5.** Indretningen ifølge krav 3, hvor filtermidlerne bæres af bølgelederen (52) og er placeret mellem en zone (19) af bølgelederen (52), i hvilken de ledende bøl-

ger er dannet, og en zone (36) af bølgelederen (52) der bærer de chromofore elementer.

**6.** Indretningen ifølge krav 5, hvor absorptionsmidler (54) til at absorbere ledende modes der er ekstraheret fra bølgelederen, er placeret på det indeksmatchende lag (48).

**7.** Indretningen ifølge krav 5, hvor afbøjningsmidlerne (56) til afbøjning af ledende modes der er ekstraheret fra bølgelederen, er placeret på det indeksmatchende lag (48).

**8.** Indretning ifølge krav 6 eller 7, hvor det indeksmatchende lag (48) og absorptionsmidlet eller afbøjningsmidlet strækker sig over en afstand, der er længere end 2 × e × tan θ, hvor e er tykkelsen af bølgelederen og θ er reflektionsvinklen inde i bølgelederen (14) og i forhold til normalen af bølgelederen (14) for den ledende mode til filtrering, der har det største effektive indeks.

**9.** Indretningen ifølge et hvilket som helst af kravene 2 til 8, hvor modefiltermidlerne strækker sig opstrøms for zonen (36), der bærer de chromofore elementer, og delvist inden for denne zone (36).

**10.** Indretningen ifølge krav 2, hvor filtermidlerne er dannet af laget, der bærer de chromofore elementer og som har topfalder (38) og bundflader (40), der divergerer fra hinanden fra zonen af koblingsmidlerne (19) til nedstrøms for zonen (34), der bærer de chromofore elementer.

**11.** Indretningen ifølge krav 10, hvor top- og bundfladerne er plane, og hvor de ikke-retningsbestemte koblingsmidler (19) er placeret på højst en tredjedel af afstanden mellem en kant, der er dannet ved skæringspunktet mellem topfladen (38) og bundfladen (40), og den del af bølgelederen der bærer de chromofore elementer (36).

**12.** Indretning ifølge et hvilket som helst af kravene 2 til 11, hvor tærskelværdien af indekset er større end eller lig med det største brydningsindeks for de elementer, der udgør omgivelserne for chromoforerne, såsom for eksempel elementerne der udgør et hybridiseringskammer (20), som er anbragt på substratet (12), og en hybridiserende væske (22) der er indeholdt i kammeret (20).

**13.** Indretning ifølge et hvilket som helst af kravene 2 til 12, hvor koblingsmidlerne omfatter en diffus struktur, der er dannet i eller på bølgelederen (14).

**14.** Indretningen ifølge krav 13, hvor den diffuse struktur er en struktur med en uordnet rumlig fordeling af indeks.

**15.** Indretning ifølge krav 13 eller 14, hvor den diffuse struktur er dannet ved mattering eller ved et lag, der er deponeret på en overflade af bølgelederen, f.eks. et lag af "Teflon" eller af metalliske eller kolloide partikler.

**16.** Indretning ifølge et hvilket som helst af kravene 13 til 15, hvor den diffuse struktur (64) omfatter diffusionspartikler (62) i en harpiksmatrix, såsom for eksempel en acrylharpiks eller en glycerophthalharpiks, eller i en polymermatrix, f.eks. fluorholdig, hvilken matrix har et brydningsindeks, der er lavere end mindst 0,5 af den for diffusionspartiklerne.

**17.** Indretning ifølge krav 13 eller 14, hvor den diffuse struktur (66) er placeret inde i bølgelederen og er lavet i form af mikrohulrum med dimensioner af størrelsesordenen 0,1 µm til 40 µm eller i form af lokale modifikationer af bølgelederen, såsom for eksempel en ændring i mediets støkiometri eller en lokal ændring fra en krystallinsk fase til en amorf fase eller omvendt, hvilken ændring påvirker materialets indeks eller dets dielektriske tensor.

**18.** Indretningen ifølge krav 13, hvor den diffuse struktur (68) der er afsat på en flade af bølgelederen, omfatter et lag af fluoroformateriale, der reagerer på en excitation med lys ved at generere fluorescerende lys, der udbreder sig i bølgelederen i form af bølger, der har en evanescent del.

**19.** Indretningen ifølge krav 18, hvor det fluoroformateriale omfatter: kvanteprikker, organiske fluoroforer, eller fluoroforer der er baseret på sjældne jordarter, eller på luminescente ioner.

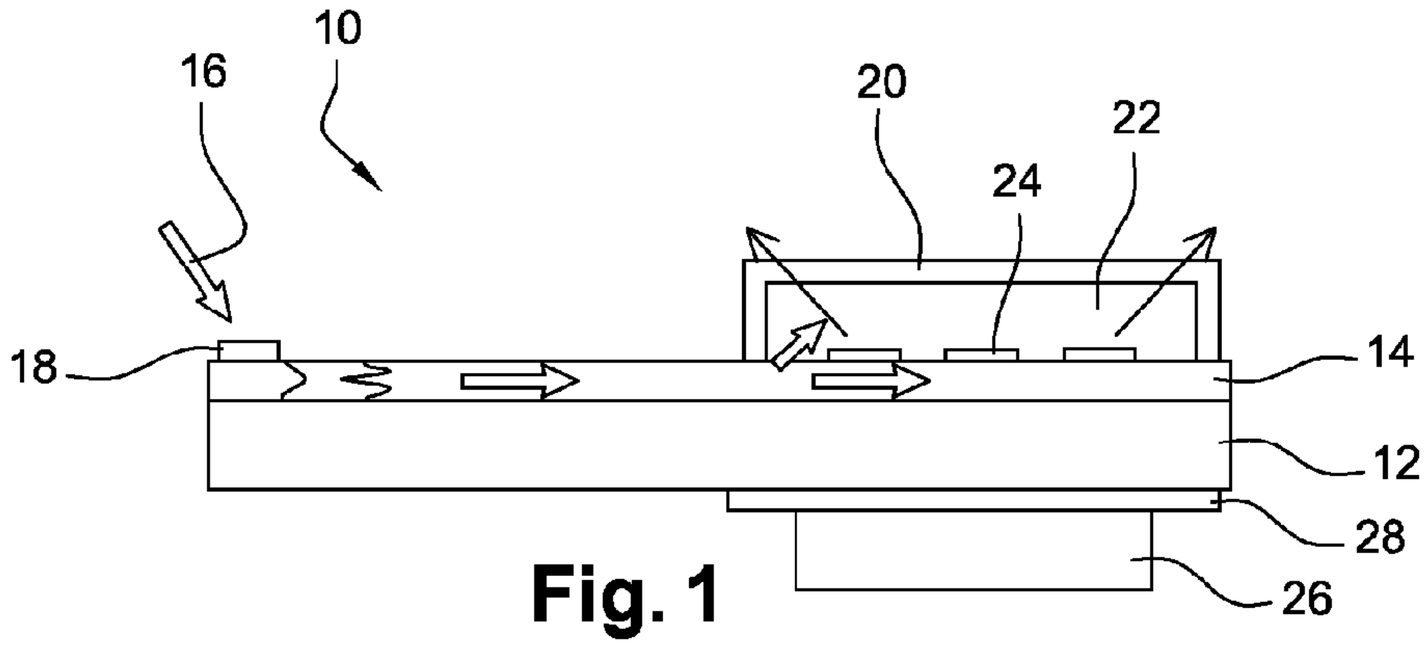


Fig. 1

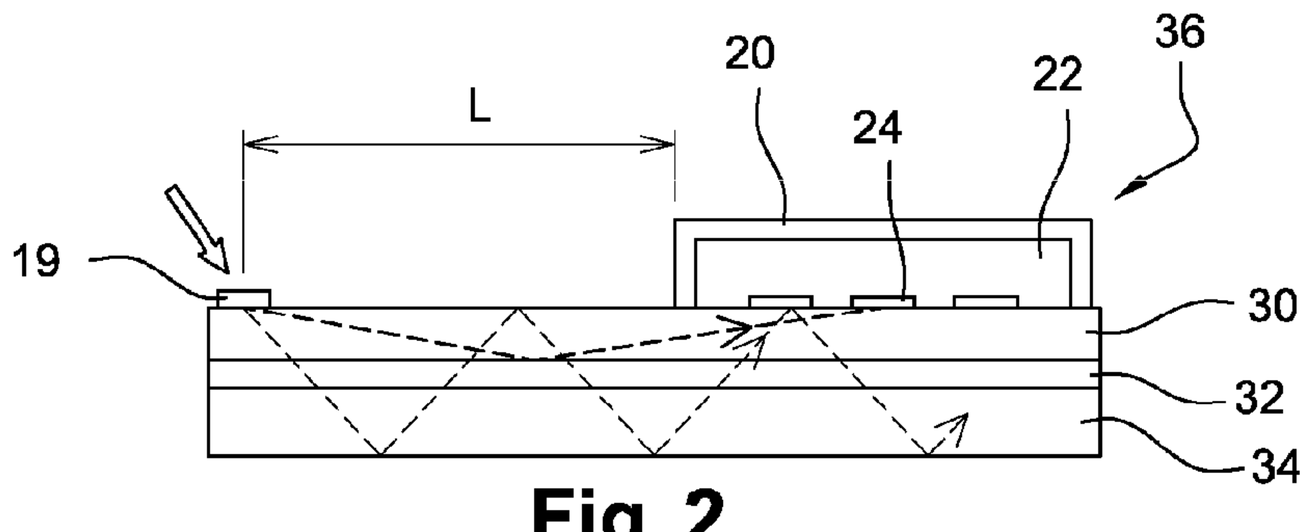


Fig. 2

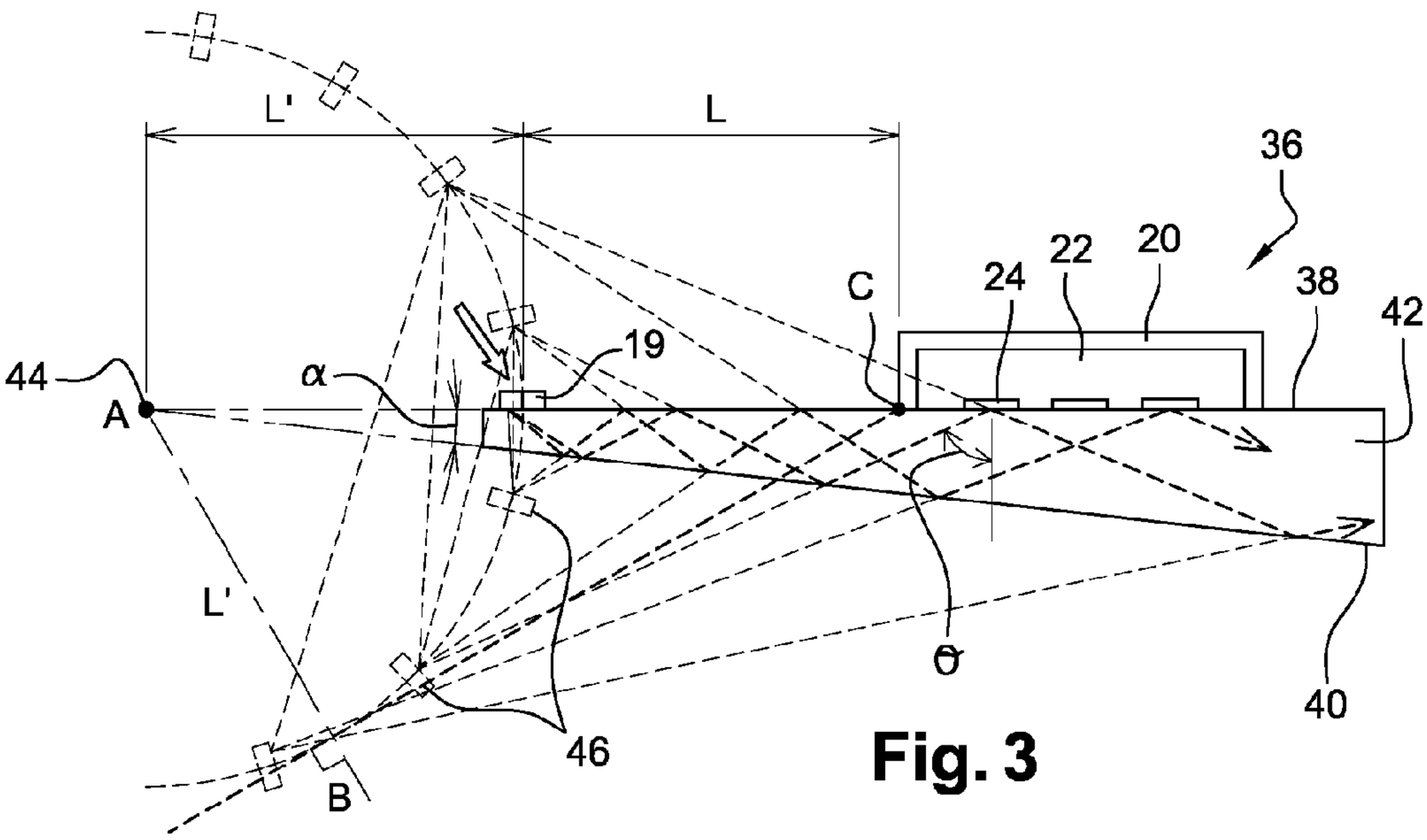


Fig. 3

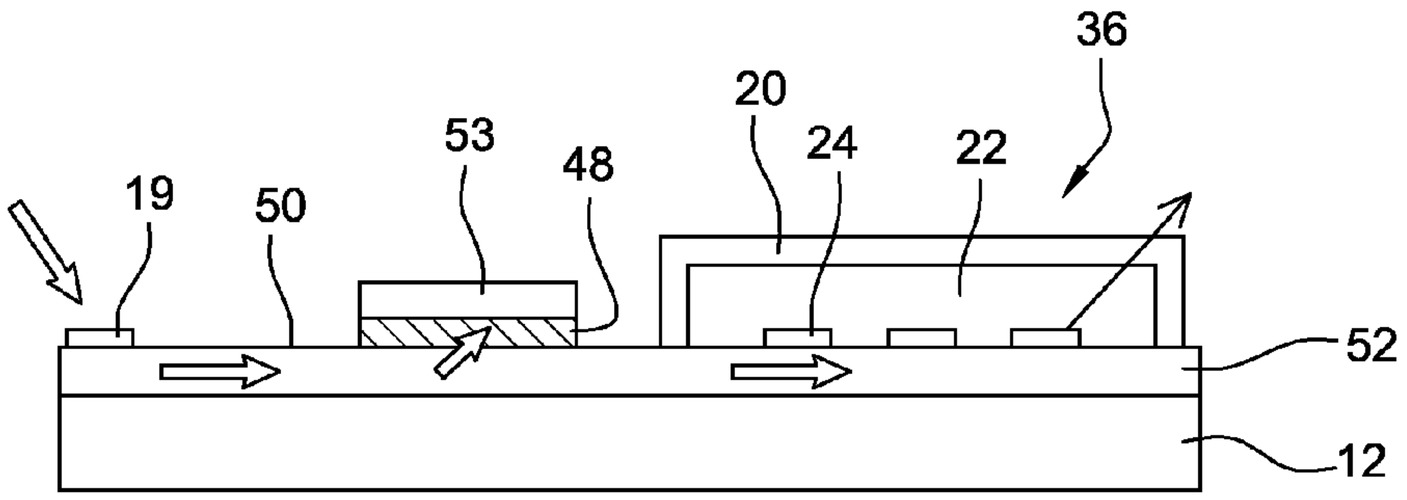


Fig. 4

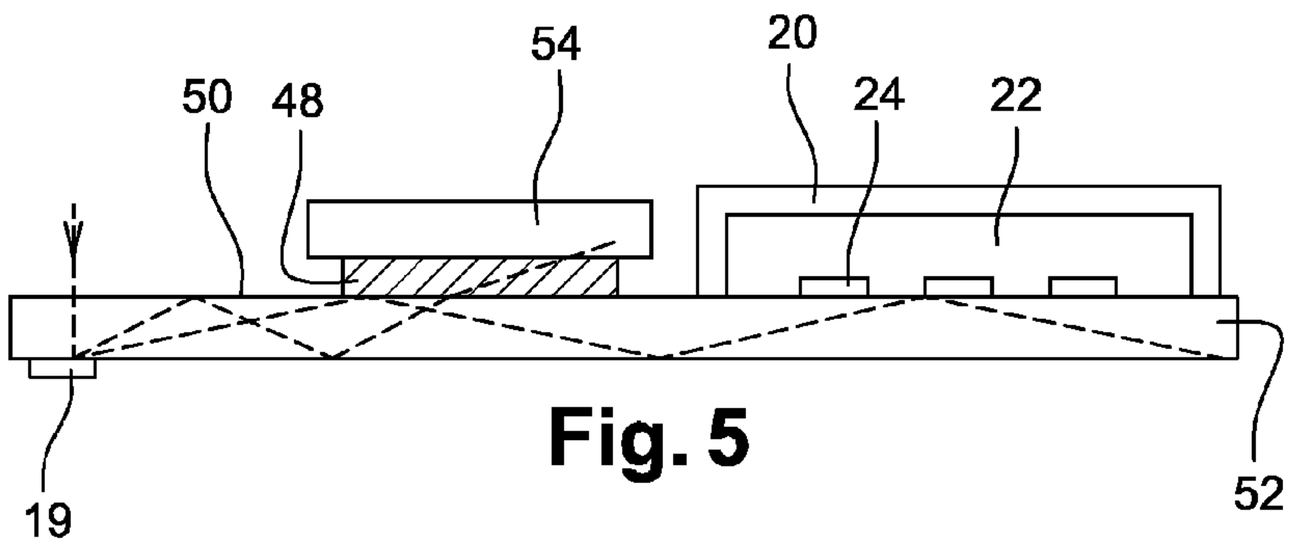


Fig. 5

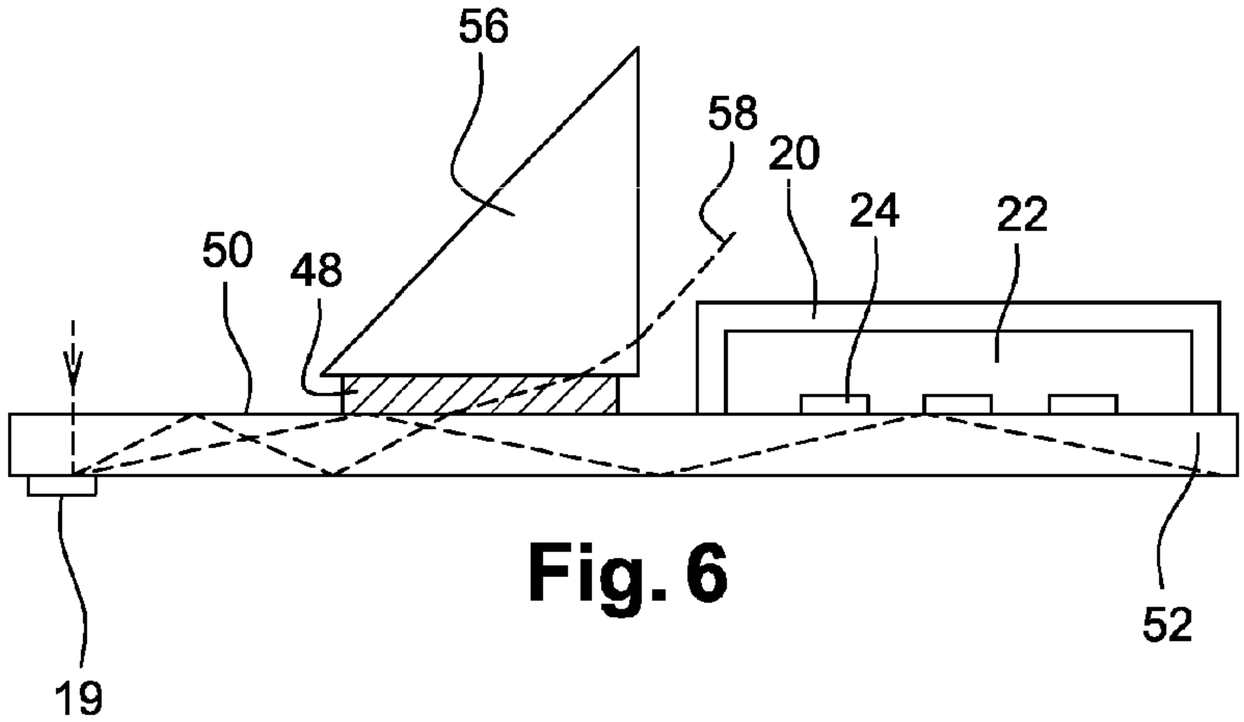


Fig. 6

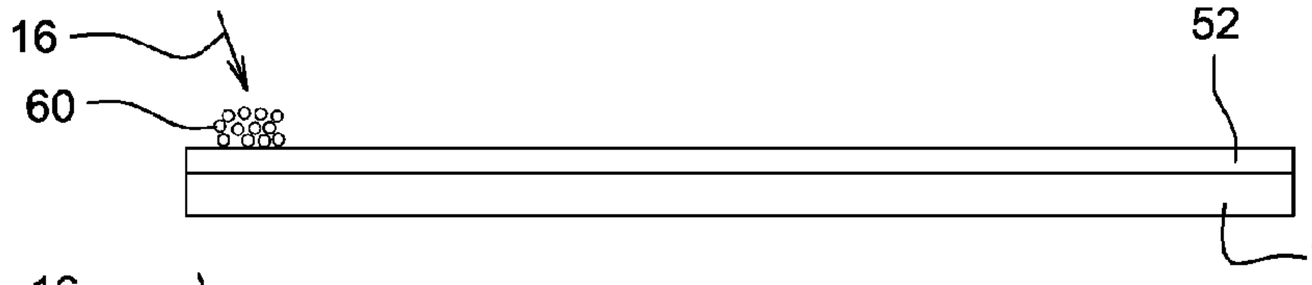


Fig. 7A

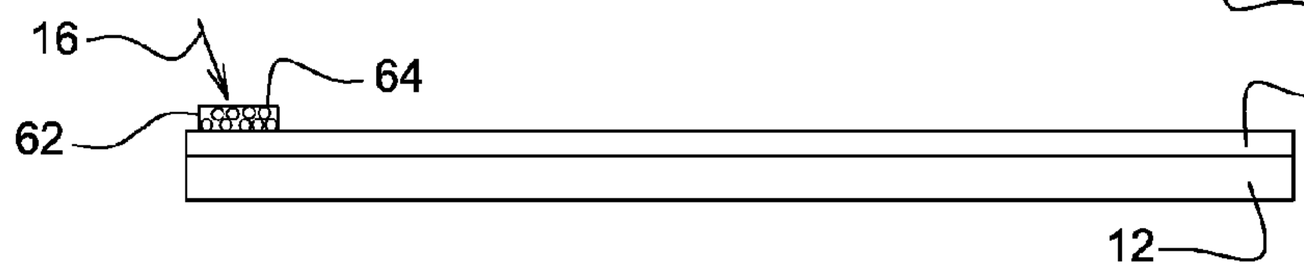


Fig. 7B

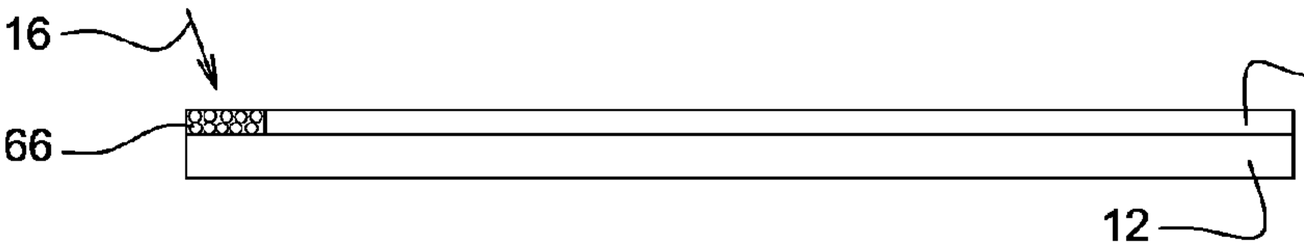


Fig. 7C

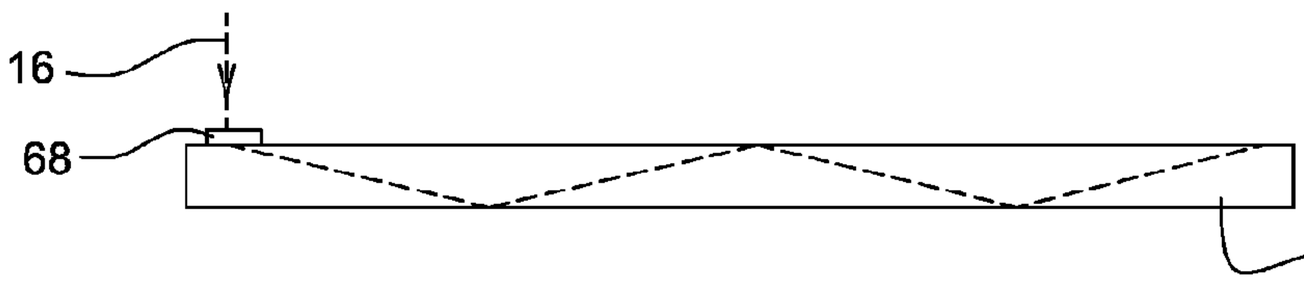


Fig. 8

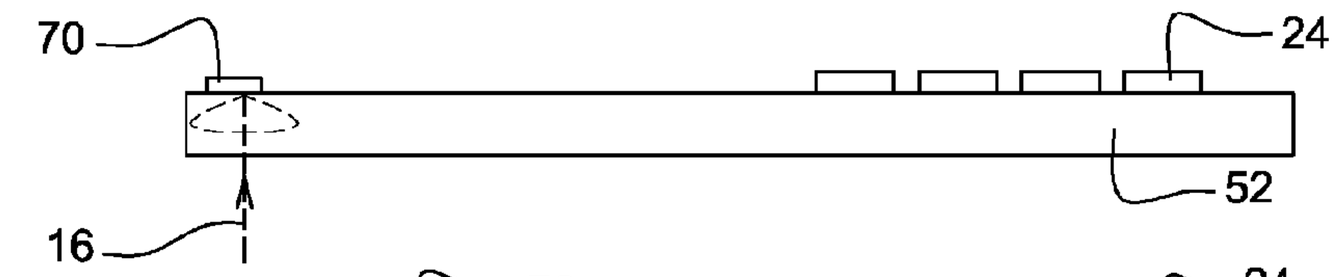


Fig. 9

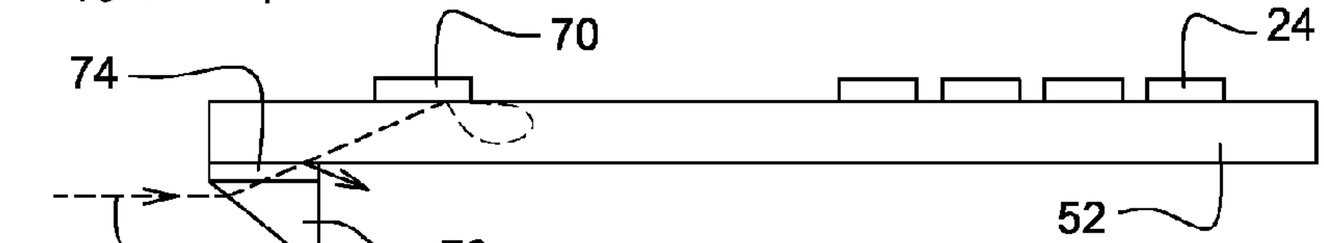


Fig. 10

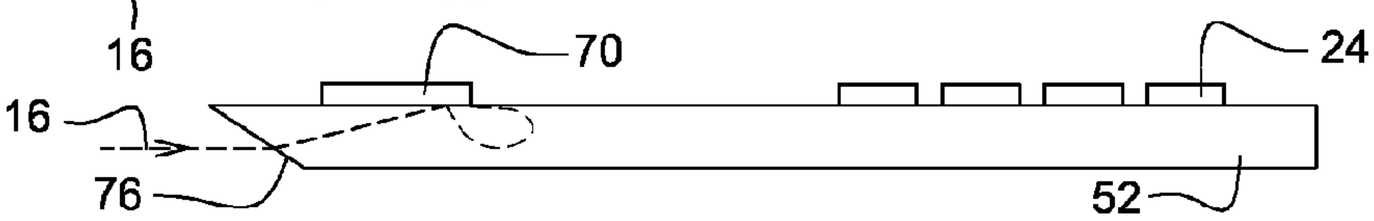


Fig. 11

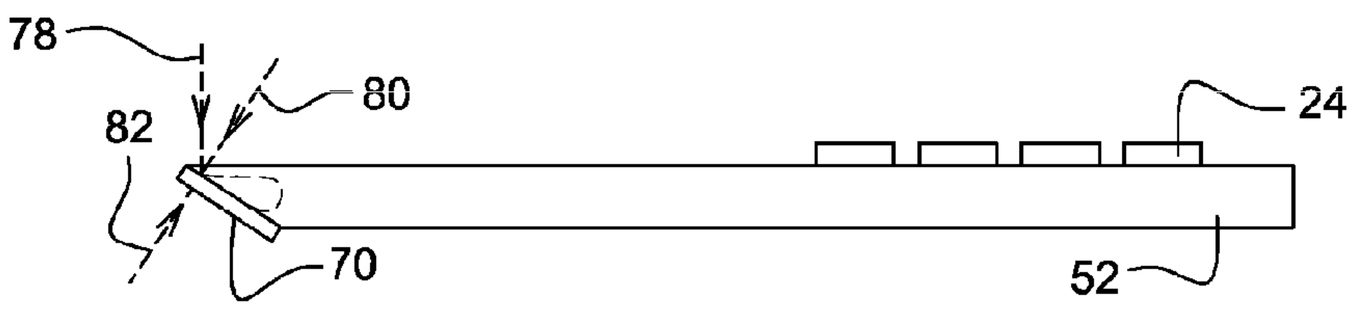


Fig. 12

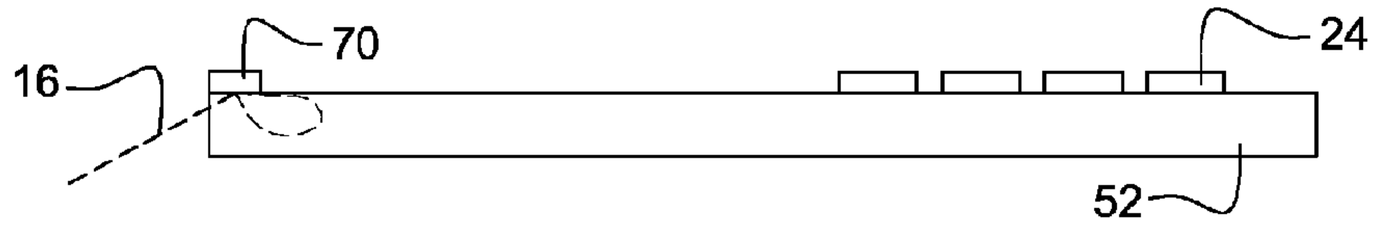


Fig. 13