Office de la Propriété Intellectuelle du Canada
Un organisme d'Industrie Canada

Canadian Intellectual Property Office
An agency of Industry Canada

CA 2554287 C 2011/03/15

(11)(21) **2 554 287**

(12) **BREVET CANADIEN**
CANADIAN PATENT

(13) **C**

(86) Date de dépôt PCT/PCT Filing Date: 2004/09/10
(87) Date publication PCT/PCT Publication Date: 2005/08/18
(45) Date de délivrance/Issue Date: 2011/03/15
(85) Entrée phase nationale/National Entry: 2006/07/21
(86) N° demande PCT/PCT Application No.: US 2004/029368
(87) N° publication PCT/PCT Publication No.: 2005/074418
(30) Priorité/Priority: 2004/01/22 (US10/763,032)

(51) Cl.Int./Int.Cl. *A61B 17/04* (2006.01)

(72) Inventeurs/Inventors:
WILSON, DONALD F., JR., US;
FOWLER, DAVID N., US;
OWENS, STEVEN J., US

(73) Propriétaire/Owner:
TELEFLEX MEDICAL INCORPORATED, US

(74) Agent: ROBIC

(54) Titre : AGRAFE DE LIGATURE AVEC MECANISME DE VERROUILLAGE INTEGRAL
(54) Title: LIGATING CLIP WITH INTEGRAL INTERLOCKING LATCH MECHANISM

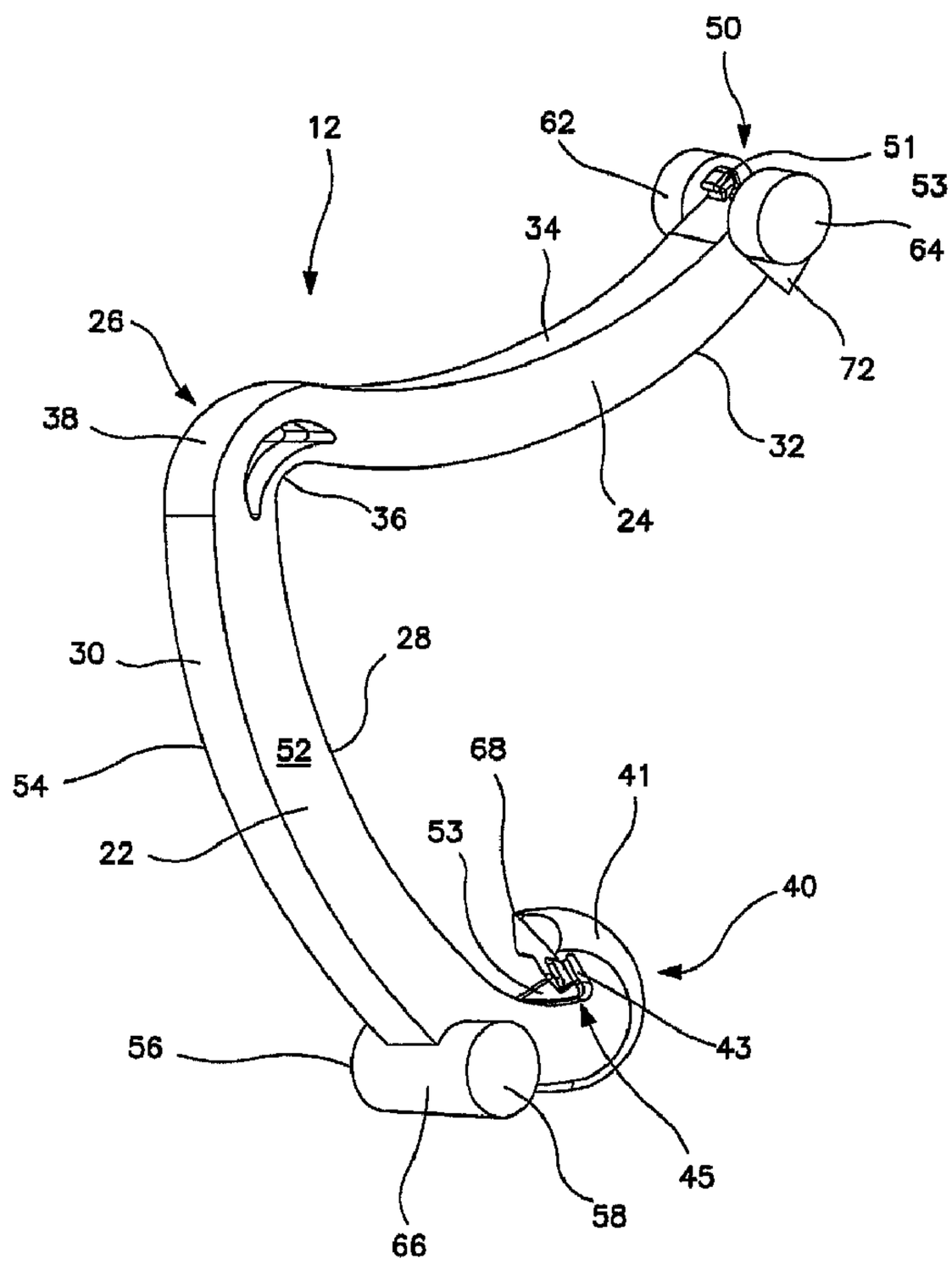

(57) Abrégé/Abstract:
A polymeric, surgical clip (12) having first and second curved legs (22, 24) joined at their proximal ends by a flexible hinge (26) section and movable from an open position to a closed position for clamping a vessel between curved opposing inner surfaces.

(57) Abrégé(suite)/Abstract(continued):
The first leg terminates at its distal end in a female locking member comprising a resilient inwardly turned hook having a recess in the mouth of the hook (41), and the second leg member terminates in a male locking member complimentary to the female locking member and comprising a detent such that when the first and second leg members are moved from an open position to a closed position about the hinge section the hook member will deflect about the distal end of the second leg member thereby engulfing the male locking member in the mouth of the hook and matingly engaging the detent in the recess thereof, thus securely locking the clip in the closed position. The locking feature provides greater closure security to the clip when clamping large diameter or uncompressible tissue.

(12) INTERNATIONAL APPLICATION PUBLISHED UNDER THE PATENT COOPERATION TREATY (PCT)

(19) World Intellectual Property Organization
International Bureau

(43) International Publication Date
18 August 2005 (18.08.2005)

PCT

(10) International Publication Number
WO 2005/074418 A3

(51) International Patent Classification[7]: A61B 17/04

(21) International Application Number: PCT/US2004/029368

(22) International Filing Date: 10 September 2004 (10.09.2004)

(25) Filing Language: English

(26) Publication Language: English

(30) Priority Data:
10/763,032 22 January 2004 (22.01.2004) US

(71) Applicant *(for all designated States except US)*: **PILLING WECK, INC.** [US/US]; One Weck Drive, P.O. Box 12600, Research Triangle Park, NC 27709 (US).

(72) Inventors; and

(75) Inventors/Applicants *(for US only)*: **WILSON, Donald, F., Jr.** [US/US]; 12301 Fieldmist Drive, Raleigh, NC 27614 (US). **FOWLER, David, N.** [US/US]; 40 Autumn Ct., Cheshire, CT 06410 (US). **OWENS, Steven, J.** [US/US]; 6284 Deerhaven Lane, Loveland, OH 45140 (US).

(74) Agent: **JENKINS, Richard, E.**; Jenkins, Wilson & Taylor, P.A., Suite 1400, University Tower, 3100 Tower Boulevard, Durham, NC 27707 (US).

(81) Designated States *(unless otherwise indicated, for every kind of national protection available)*: AE, AG, AL, AM, AT, AU, AZ, BA, BB, BG, BR, BW, BY, BZ, CA, CH, CN, CO, CR, CU, CZ, DE, DK, DM, DZ, EC, EE, EG, ES, FI, GB, GD, GE, GH, GM, HR, HU, ID, IL, IN, IS, JP, KE, KG, KP, KR, KZ, LC, LK, LR, LS, LT, LU, LV, MA, MD, MG, MK, MN, MW, MX, MZ, NA, NI, NO, NZ, OM, PG, PH, PL, PT, RO, RU, SC, SD, SE, SG, SK, SL, SY, TJ, TM, TN, TR, TT, TZ, UA, UG, US, UZ, VC, VN, YU, ZA, ZM, ZW.

(84) Designated States *(unless otherwise indicated, for every kind of regional protection available)*: ARIPO (BW, GH, GM, KE, LS, MW, MZ, NA, SD, SL, SZ, TZ, UG, ZM, ZW), Eurasian (AM, AZ, BY, KG, KZ, MD, RU, TJ, TM), European (AT, BE, BG, CH, CY, CZ, DE, DK, EE, ES, FI, FR, GB, GR, HU, IE, IT, LU, MC, NL, PL, PT, RO, SE,

[Continued on next page]

(54) Title: LIGATING CLIP WITH INTEGRAL INTERLOCKING LATCH MECHANISM

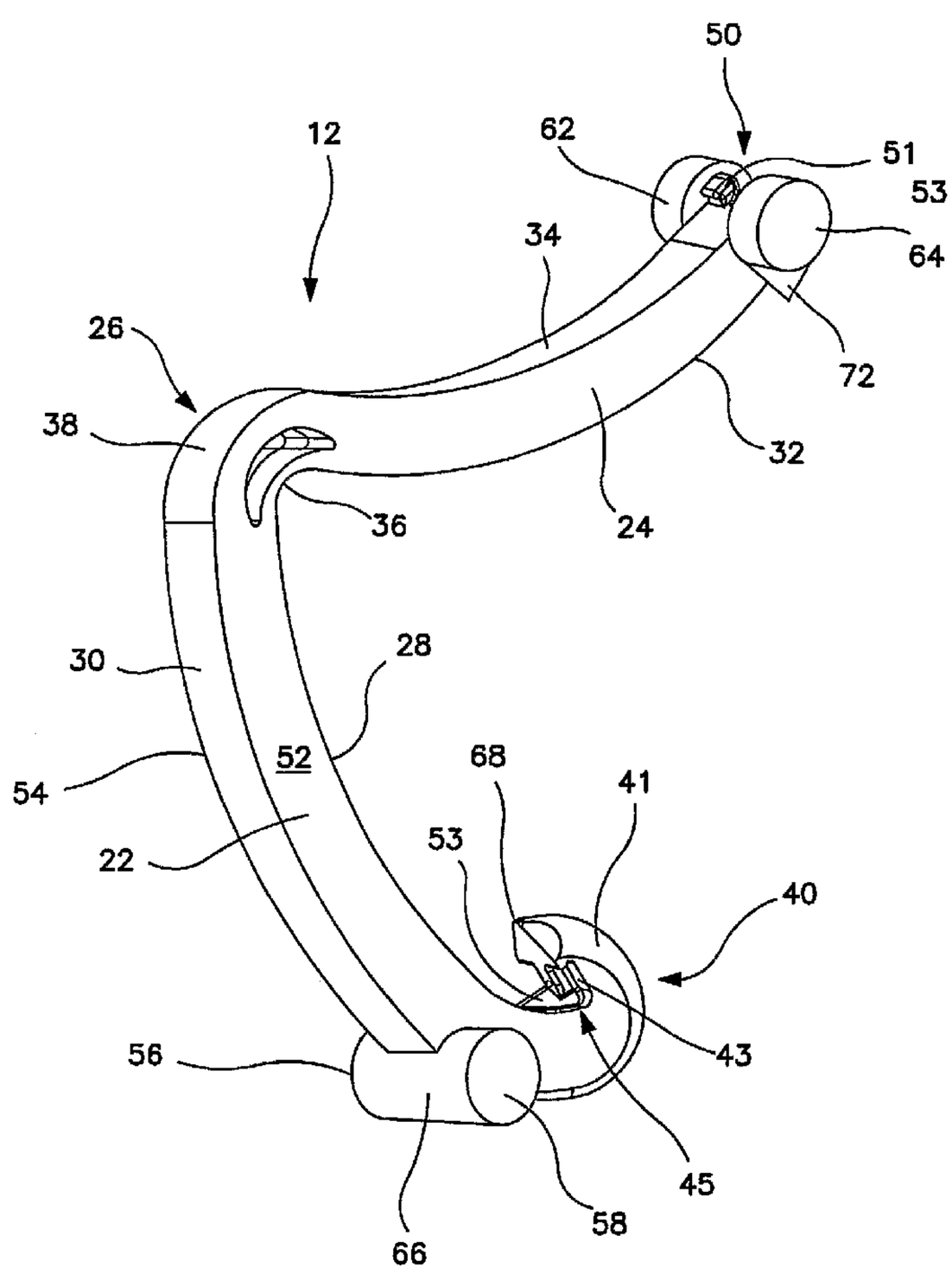

(57) Abstract: A polymeric, surgical clip (12) having first and second curved legs (22, 24) joined at their proximal ends by a flexible hinge (26) section and movable from an open position to a closed position for clamping a vessel between curved opposing inner surfaces. The first leg terminates at its distal end in a female locking member comprising a resilient inwardly turned hook having a recess in the mouth of the hook (41), and the second leg member terminates in a male locking member complimentary to the female locking member and comprising a detent such that when the first and second leg members are moved from an open position to a closed position about the hinge section the hook member will deflect about the distal end of the second leg member thereby engulfing the male locking member in the mouth of the hook and matingly engaging the detent in the recess thereof, thus securely locking the clip in the closed position. The locking feature provides greater closure security to the clip when clamping large diameter or uncompressible tissue.

WO 2005/074418 A3

WO 2005/074418 A3

SI, SK, TR), OAPI (BF, BJ, CF, CG, CI, CM, GA, GN, GQ, GW, ML, MR, NE, SN, TD, TG).

Published:

— *with international search report*

— *before the expiration of the time limit for amending the claims and to be republished in the event of receipt of amendments*

(88) Date of publication of the international search report: 11 May 2006

For two-letter codes and other abbreviations, refer to the "Guidance Notes on Codes and Abbreviations" appearing at the beginning of each regular issue of the PCT Gazette.

LIGATING CLIP WITH INTEGRAL INTERLOCKING LATCH MECHANISM

Technical Field

Disclosed herein are surgical clips, and more particularly ligating clips with integral interlocking latch mechanisms to facilitate securely locking the surgical clip in a closed position. Yet more particularly, disclosed herein is an improved surgical ligating clip that is provided with a female locking member on one leg and a male locking member on the other leg, wherein the female locking member comprises a resilient hook defining a recess within the mouth of the hook and the male locking member comprises at least one detent. The female and male locking members are positioned such that when the leg members are moved from an open position to a closed position, the resilient hook is urged open to receive the male locking member, while the recess also receives the detent, providing an improved locking feature to more securely lock the clip in the closed position.

Background Art

Many surgical procedures require vessels or other tissues of the human body to be ligated during the surgical process. For example, many surgical procedures require cutting blood vessels (e.g., veins or arteries), and these blood vessels may require ligation to reduce bleeding. In some instances, a surgeon may wish to ligate the vessel temporarily to reduce blood flow to the surgical site during the surgical procedure. In other instances a surgeon may wish to permanently ligate a vessel. Ligation of vessels or other tissues can be performed by closing the vessel with a ligating clip, or by suturing the vessel with surgical thread. The use of surgical thread for ligation requires complex manipulations of the needle and suture material to form the knots required to secure the vessel. Such complex manipulations are time-consuming and difficult to perform, particularly in endoscopic surgical procedures, which are

characterized by limited space and visibility. By contrast, ligating clips are relatively easy and quick to apply. Accordingly, the use of ligating clips in endoscopic as well as open surgical procedures has grown dramatically.

Various types of hemostatic and aneurysm clips are used in surgery for ligating blood vessels or other tissues to stop the flow of blood. Such clips have also been used for interrupting or occluding ducts and vessels in particular surgeries such as sterilization procedures. Typically, a clip is applied to the vessel or other tissue by using a dedicated mechanical instrument commonly referred to as a surgical clip applier, ligating clip applier, or hemostatic clip applier. Generally, the clip is left in place after application to the tissue even after hemostasis or occlusion occurs. At some point thereafter, the clip can be removed by using a separate instrument dedicated for that purpose, i.e., a clip removal instrument.

Ligating clips can be classified according to their geometric configuration (e.g., symmetric clips or asymmetric clips), and according to the material from which they are manufactured (e.g., metal clips or polymeric clips). Symmetric clips are generally "U" or "V" shaped and thus are substantially symmetrical about a central, longitudinal axis extending between the legs of the clip. Symmetric clips are usually constructed from metals such as stainless steel, titanium, tantalum, or alloys thereof. By means of a dedicated clip applier, the metal clip is permanently deformed over the vessel. An example of one such clip is disclosed in U.S. Patent No. 5,509,920 to Phillips et al. An example of a metallic clip applier is disclosed in U.S. Patent No. 3,326,216 to Wood in which a forceps-type applier having conformal jaws is used to grip and maintain alignment of the clip during deformation. Such appliers may additionally dispense a plurality of clips for sequential application, as disclosed in U.S. Patent No. 4,509,518 to McGarry et al.

With the advent of high technology diagnostic techniques using computer tomography (CATSCAN) and magnetic resonance imaging (MRI), metallic clips have been found to interfere with the imaging techniques. To overcome such interference limitations, biocompatible polymers have been increasingly used for surgical clips. Unlike metallic clips, which are usually

symmetric, polymeric clips are usually asymmetric in design and hence lack an axis of symmetry. Inasmuch as the plastic clip cannot be permanently deformed for secure closure around a vessel or other tissue, latching mechanisms have been incorporated into the clip design to establish closure conditions and to secure against re-opening of the vessel. For example, well known polymeric clips are disclosed in U.S. Patent No. 4,834,096 to Oh et al. and U.S. Patent No. 5,062,846 to Oh et al., both of which are assigned to the assignee of the present invention. These plastic clips generally comprise a pair of curved legs joined at their proximal ends with an integral hinge or heel. The distal ends of the curved legs include interlocking latching members. For example, the distal end of one leg terminates in a lip or hook structure into which the distal end of the other leg securely fits to lock the clip in place.

The distal ends of the clips taught by Oh et al. also include lateral bosses that are engaged by the jaws of the clip applier. A clip applier specifically designed for asymmetric plastic clips is used to close the clip around the tissue to be ligated, and to latch or lock the clip in the closed condition. In operation, the jaws of this clip applier are actuated into compressing contact with the legs of the clip. This causes the legs to pivot inwardly about the hinge, thereby deflecting the hook of the one leg to allow reception therein of the distal end of the other leg. A clip applier designed for use with asymmetric plastic clips in an open (i.e., non-endoscopic) surgical procedure is disclosed in U.S. Patent No. 5,100,416 to Oh et al., also assigned to the assignee of the present invention.

In addition to compatibility with sophisticated diagnostic techniques, asymmetric clips have other advantages over symmetric clips. For example, because asymmetric clips are formed from polymeric materials, the mouths of asymmetric clips can generally be opened wider than the mouths of symmetric clips. This allows a surgeon to position the clip about the desired vessel with greater accuracy. In addition, a clip of the type described in the aforementioned U.S. Patent Nos. 4,834,096 and 5,062,846 can be repositioned before locking the clip on the vessel or before removing the clip from the vessel, in a process referred to as "approximating" the clip.

Although plastic ligating clips are well known in the surgical arena and improvements have been made to the ligating clips including providing an interlocking latch member as described above (see also, for example, the aforementioned Oh et al. U.S. Patent Nos. 4,834,096 and 5,062,846), the latching mechanisms of the prior art plastic ligating clips are limited in the amount of force that can be applied against them. In certain circumstances, when excess force is applied to the latch mechanism, the latch mechanism may fail and the clip inadvertently open. For example, when large diameter, non-compressible tissue such as ligaments require clamping, ligating clips with the simple prior art latching mechanism may not be able to maintain the tension required to keep the clamp closed. Thus, surgeons may benefit from a clip having a more secure interlocking latch when the tissue to be clamped will place excessive force on the latch mechanism. Therefore, there is believed to be a long-felt need for an improved polymeric surgical ligating clip with an integral interlocking latch mechanism to provide an increased binding capacity so as to be particularly well suited for use in clamping large or non-compressible tissue such as ligaments and the like. The present invention is believed to provide such an improved surgical clip.

Brief Summary

According to the present invention, there is provided a surgical clip with an interlocking latch mechanism, comprising:

a first leg and a second leg, each of said legs having an inner vessel-clamping surface and an outer surface, said inner surfaces being positioned in opposition to each other;

a flexible hinge section integrally disposed between and joining the proximal ends of said first and second legs; and

a female locking member positioned on the distal end of said first leg and comprising a resilient inwardly turned hook defining a recess in a mouth of said hook, and a male locking member positioned on the distal end of said second leg comprising at least one detent extending therefrom, said female and male locking members being formed whereby when said first and second leg members are moved from an open position to a closed position about said hinge section, said resilient hook of said female locking member is urged open to receive the detent of said male locking member in the recess thereof so as to removably lock said first and second leg members of said surgical clip in said closed position;

and further comprising a gusset within the mouth of said hook, wherein the at least one detent extending outwardly from said male locking member comprises two spaced-apart detents each having an inwardly turned lip extending generally toward said flexible hinge section for lockingly engaging said recess in the mouth of said hook.

Other preferred aspects, objects, embodiments, variants and/or resulting advantages of the present invention are briefly summarized hereinbelow.

Indeed, in accordance with preferred embodiments disclosed herein, a polymeric surgical clip is provided of the type comprising first and second legs joined at their proximal ends by a flexible hinge section. The hinge section has a continuous concave inner surface and a continuous convex outer surface. Each leg member has a vessel clamping inner surface and an opposite outer surface, and the vessel clamping inner surface of one leg is in opposition to the vessel clamping inner surface of the other leg. The first leg terminates at its distal end in a female locking member comprising a resilient inwardly turned hook defining a recess within the mouth of the hook, and the second leg member terminates at its distal end in a male locking member comprising at least one detent. The female and male locking members are complimentary to one another and positioned such that when the first and second legs are moved from an open position to a closed position about the hinge section, the _____

hook member deflects about the male locking member and is urged open to receive the detent of the male locking member in the recess of the female locking member to lock the clip in a closed position. The clip may preferably be provided with at least one detent having an inwardly turned lip extending generally toward the hinge section for further lockingly engaging the detent to the recess in the mouth of the hook, thus providing a third locking feature.

In the preferred embodiment, the surgical clip has a female locking member with a bifurcated recess and the male locking member has two outwardly extending spaced-apart detents that each engages a respective one of the two halves of the bifurcated recess. The bifurcated recess is defined by a gusset projecting outward from the mouth of the hook that provides structural support to the hook of the female locking member so that the hook is not excessively deformed by initial contact with the male locking member when the clip is closed.

Further in the preferred embodiment, the inner vessel-clamping surface of the first leg has a concave radius of curvature and the outer surface has a convex radius of curvature between the hinge section and the distal end. In the same embodiment, the inner vessel-clamping surface of the second leg has a convex radius of curvature and the outer surface has a concave radius of curvature between the hinge section and the distal end.

Further in the preferred embodiment, the surgical clip comprises a pair of bosses joined to opposite sides of the first leg between the hinge section and the distal end of the first leg. A portion of the pair of bosses extend beyond the outer surface of the first leg to form a bridge section. Another pair of bosses is also joined to opposite sides of the second leg, at its distal end. The bosses on the second leg can each have a sharp tissue-penetrating tooth extending therefrom and toward the first leg.

Still further in the preferred embodiment, at least one of the inner surfaces of the clip comprises a plurality of protrusions extending from the inner surface, for providing improved vessel retention during and following closure of the clip. Preferably, both of the inner surfaces comprise the plurality of protrusions.

The surgical clip disclosed herein is most suitably made of polymeric material and accordingly minimizes interference with high technology diagnostic modalities such as CAT SCAN, MRI and MRS. At the same time, the clip is nearly as small as comparable metal clips while maintaining sufficient strength and possessing a high degree of security in the clip's latching mechanism. The surgical clip is configured to provide a secure means of handling an application to avoid premature release from the applier of the clip.

It is therefore an object of the present invention to provide a polymeric surgical clip capable of occluding a vessel or fastening other tissue by being securely locked in a closed position to assure it will not release maturely, even when the secured tissue is large in diameter or generally non-compressible.

Some of the objects of the invention having been stated hereinabove, other objects will become evident as the description proceeds when taken in connection with the accompanying drawings as best described hereinbelow.

Brief Description of the Drawings

Figure 1 is a perspective view of the improved surgical ligating clip of the present invention;

Figure 2 is an enlarged perspective view of the surgical ligating clip showing the hinge section and proximal ends of the first and second legs in detail including the plurality of protrusions on the inner surface of one leg;

Figure 3 is an enlarged fragmentary perspective view of the female locking member on the first leg of the surgical ligating clip showing the recess and gusset in detail;

Figure 4 is another enlarged fragmentary perspective view of the female locking member on the first leg of the surgical ligating clip;

Figure 5 is an enlarged fragmentary perspective view of the male locking member on the second leg of the surgical ligating clip showing the detent and inwardly turned lip thereof in detail;

Figure 6 is another enlarged fragmentary perspective view of the male locking member on the second leg of the surgical ligating clip;

Figure 7 is a vertical cross-sectional view of the surgical ligating clip in the closed position showing the latching mechanism engaged;

Figure 8A is a perspective view of a clip applier being inserted into a compartment of a clip cartridge to engage a surgical ligating clip provided in accordance with the present invention;

Figure 8B is another perspective view showing the clip applier engaging the surgical ligating clip loaded in one of the compartments of the clip cartridge as shown in Figure 8A; and

Figure 8C is another perspective view showing the clip applier extracting the surgical ligating clip from the compartment of the clip cartridge shown in Figure 8A.

Detailed Description of the Invention

Referring now to Figures 1 - 7, one example is illustrated of an asymmetric surgical clip with an improved latching mechanism generally designated **12**, which is suitable for use as disclosed herein. Clip **12** and others of similar design are useful as hemostatic clips that can be latched around a vessel to ligate the vessel and thereby stop or reduce the flow of fluid through the vessel. Clip **12** is also useful for clamping other types of tissue as well. Clip **12** is particularly useful for clamping non-compressible tissue, such as ligaments, and other large diameter tissue, such as large vessels that cannot be clamped using traditional metal clips or other polymeric clips with known latching mechanisms.

Clip **12** can be constructed from any suitable biocompatible material, such as certain metals and polymers. However, the presently disclosed subject matter is particularly suitable for practice with polymeric clips. Thus, clip **12** preferably comprises a one-piece integral polymeric body formed from a suitable strong biocompatible engineering plastic such as the type commonly used for surgical implants. Examples include acetal polyoxymethylene (POM), polyethylene terephthalate (PET), polybutylene terephthalate (PBT), polyoxymethylene, or other thermoplastic materials having similar properties that can be injection-molded, extruded or otherwise processed into like articles.

As best shown in Figure 1, the body of clip **12** comprises a first or outer leg, generally designated **22**, and a second or inner leg, generally designated **24**. First and second legs **22** and **24** are joined at their proximal ends by an

integral flexible hinge section, generally designated **26**. First and second legs **22** and **24** have complementary arcuate profiles. Thus, first leg **22** has a concave inner vessel-clamping surface **28** and a convex outer surface **30**, and second leg **24** has a convex inner vessel-clamping surface **32** and a concave outer surface **34**. Convex inner surface **32** of second leg **24** and concave inner surface **28** of first leg **22** have substantially matching radii of curvature, as shown in Figure 2. Flexible hinge section **26** has a continuous concave inner surface **36** and a continuous convex outer surface **38**. Concave inner surface **36** of hinge section **26** joins concave inner surface **28** of first leg **22** and convex inner surface **32** of second leg **24**. Convex outer surface **38** of hinge section **26** joins convex outer surface **30** of first leg **22** and concave outer surface **34** of second leg **24**.

First leg **22** terminates in a female locking member **40**, having a C-shaped hook **41** at its distal end. As best shown in Figures 3 and 4, female locking member **40** is distally curved inwardly toward hinge section **26** to form resilient inwardly turned hook **41**. A recess **43** is positioned within the mouth **45** of hook **41**, adjacent the distal end of hook **41**. Hook **41** and recess **43** are adapted for releasably engaging male locking member **50** at the end of second leg **24** in the course of compressing clip **12** into a latched or locked position around a vessel, ligament or other tissue, as described hereinbelow in greater detail. Optionally, the top surface of female locking member **40** (see Figures 3 and 4) comprises two convex surfaces **47** that come together to define a sharp crest-like cutting edge **49** to facilitate cutting through connective tissue adjacent a vessel or other tissue during latching of the clip therearound.

As best shown in Figures 3 and 4, hook **41** further comprises a brace or gusset **53** for strengthening the arch of hook **41**. As clip **12** is moved to the closed position, male locking member **50** first contacts female locking member **40** at the crest of hook **41**, thereby applying compressive force to hook **41**. If excessive friction occurs at contact spots due to unique local conditions, the compressive force will increase sufficiently to collapse the arch of hook **41**. If hook **41** collapses, mouth **45** closes, and male locking member **50** is prevented

from entering female locking member **40**, effectively preventing locking of clip **12**. Gusset **53** strengthens hook **41** sufficiently to prevent its collapse in situations of high compressive force during closure of clip **12**. In the preferred embodiment described herein, gusset **53** extends into recess **43** and effectively bifurcates recess **43** (see Figures 3 and 4)

As best shown in Figures 5 and 6, second leg **24** terminates in male locking member **50** at its distal end. Extending outward from male locking member **50** on concave outer surface **34** at the distal end of second leg **24** are two detents **51**. Detents **51** are positioned to matingly engage recess **43** of female locking member **40** when clip **12** is moved to a closed position, thus securely locking clip **12** in the closed position. To further ensure clip **12** remains in the closed and locked position, detents **51** further each comprise an inwardly turned lip **55** that enhances the locking engagement of recess **43** of female locking member **40**. Although the invention contemplates that a single detent **51** could be used, detents **51** most suitably are a plurality of detents, preferably two detents **51** separated by a groove **57**, as best shown in Figures 5 and 6. In this preferred embodiment, recess **43** is bifurcated with each half of the bifurcated recess engaging one of detents **51**. Groove **57** functions to guide sharp tip **68** on female locking member **40** over male locking member **50** as clip **12** is moved to the closed position. Positioning sharp tip **68** facilitates proper locking engagement of male locking member **50** with female locking member **40**. When clip **12** is in the closed position, gusset **53** of female locking member **40** nestles within groove **57** of male locking member **50**.

As best shown in Figure 2, which is a view directed into the open convex side of clip **12**, clip **12** also comprises opposing side surfaces **52** and **54**. Typically, the body of clip **12** has a constant thickness between side surfaces **52** and **54**. Both first and second legs **22** and **24** have a plurality of protrusions or teeth **76** extending from their respective inner surfaces **28** and **32**, and in a preferred embodiment, extending completely across inner surfaces **28** and **32** until meeting side surfaces **52** and **54**. These latter features are designed to engage the tissue of the vessel being clamped and assist in preventing the

vessel from sliding laterally or longitudinally during or following clip closure. It will be noted, however, that other clips equally suitable for use in conjunction with the invention do not contain such features.

Adjacent to the distal end of first leg **22** and immediately inwardly of female locking member **40**, a pair of cylindrical bosses **56** and **58** are formed coaxially on the opposed lateral surfaces of first leg **22**. In the illustrated example of clip **12**, a bridge section **66** couples bosses **56** and **58** together. As evident in Figure 1, bosses **56** and **58** project outwardly beyond convex outer surface **30** of first leg **22**. Referring still to Figure 1, at the distal end of second or inner leg **24**, another pair of cylindrical bosses **62** and **64** is formed coaxially on the opposed lateral surfaces of inner leg **24** at tip section **42**. As best shown in Figures 5 and 6, bosses **62** and **64** of second leg **24** extend forwardly beyond male locking member **50**.

Clip Closure

In the practice of ligating a vessel as understood by persons skilled in the art, clip **12** is designed to be compressed into a latched or locked position around the vessel through the use of an appropriate clip applicator instrument, such as the type described in U.S. Patent No. 5,100,416 and shown in Figures 8A through 8C. The clip applicator instrument **120** engages bosses **56, 58, 62** and **64** of clip **12** and pivots bosses **56, 58, 62** and **64** inwardly about hinge section **26**. This causes first and second legs **22** and **24** to close around the vessel, ligament, or similar tissue with convex inner surface **32** of second leg **24** and complementary concave inner surface **28** of first leg **22** contacting the outer wall of the vessel or similar tissue. Male locking member **50** of second leg **24** then begins to contact female locking member **40**. Further pivotal movement by the applicator instrument longitudinally elongates first leg **22** and hook **41** of female locking member **40** is deflected by initial contact with male locking member **50**, urging hook **41** open and allowing male locking member **50** to enter mouth **45** of female locking member **40**, thereby aligning detents **51** with bifurcated recess **43**. Upon release of the applicator instrument, detents **51** snap into and are matingly seated in bifurcated recess **43**. Simultaneously,

resilient hook **41** is released from its outwardly flexed position, returning to its normal inwardly turned conformation, and consequently engulfing male locking member **50**. At this point, clip **12** is in its securely closed and latched position, as best shown in Figure 7. In the latched position, male locking member **50** is engaged in mouth **45**, and detents **51** are matingly engaged with bifurcated recess **43**, thereby providing a latching mechanism and securely clamping a designated vessel or other tissue between concave inner surface **28** and convex inner surface **32**.

The interlocking double latching mechanism **14** discussed above, wherein hook **41** engulfs male locking member **50** and detents **51** matingly engage recess **43**, is advantageous over the prior art clip devices for its added security of closure. Further, latching mechanism **14** secures tighter than both traditional metal clips and polymeric clips of the prior art with simple latching mechanisms. Therefore, clip **12** with latching mechanism **14** is superior for clamping vessels with large diameters and non-compressible tissue, such as ligaments, that cannot be securely clamped by devices previously known in the art.

As described hereinbefore, clip **12** further comprises detents **51** of male locking member **50**, each having an inwardly turned lip **55** on the top thereof and projecting toward flexible hinge **26**. As best seen in Figure 7, when clip **12** is moved to its closed position, lips **55** are positioned so as to further engage bifurcated recess **43**, thereby providing an enhanced locking feature for greater latching strength and safety. As shown in Figure 7, wherein clip **12** is in the closed position, but without tissue clamped between first and second legs **22** and **24**, there is a noticeable gap **G** between lips **55** and the front wall of recess **43**. As such, lips **55** are not engaging bifurcated recess **43**, and therefore are not fully participating in the locking action of latch mechanism **14**. However, when clip **12** is secured around a tissue, it forces second leg **24** upward, thereby flexing and shortening second leg **24**. As second leg **24** shortens, gap **G** diminishes until lip **55** is engaged with the wall of recess **43**, thereby providing the enhanced locking feature to clip **12**. Thus, with the latch

mecanism of clip **12** as the diameter or non-compressibility of a selected tissue increases, the latching action of clip **12** becomes greater. A prior art clip with conventional latch mechanism would fail long before clip **12** since it does not posses features that prevent the further shortening of one or more legs as the diameter of the selected tissue increases.

Prior art clips similar to clip **12** are described in detail in the commonly assigned U.S. Patent No. 4,834,096 to Oh et al. and 5,062,846 to Oh et al. In addition, a particularly suitable clip is the HEM-O-LOK™ clip commercially available from the assignee of the present invention. These clips are currently available in sizes designated "M", "ML", "L" and "XL". The clip cartridge described hereinbelow can be adapted to accommodate any sizes of HEM-O-LOK™ clips commercially available.

Referring now to Figures 8A – 8C, a preferred embodiment of a clip cartridge, generally designated **100**, is shown for use with clip **12** of the present invention. Clip cartridge **100** preferably is constructed from a single-molded plastic body from which several features are formed. In particular, clip cartridge **100** comprises a plurality of clip retaining chambers or compartments **111** spaced along a longitudinal axis **L** of clip cartridge **100**. Each clip compartment **111** is substantially identical and adapted for storing one clip **12**, which preferably has an asymmetric design as described above and illustrated in Figures 1 - 7. Figure 8A illustrates one clip **12** in a stored condition in one of clip compartments **111**. It will be understood, however, that preferred embodiments of clip cartridge **100** include several clip compartments **111** for storing several clips **12**. For instance, clip cartridge **100** is adapted for storing six clips **12**, although other embodiments can be provided that store more or

less clips **12**. If desired, an adhesive backing (not shown) can be provided on the underside of clip cartridge **100** to facilitate securing clip cartridge **100** to a tray or other supporting component during use.

Figures 8A – 8C also illustrate the distal end of a representative clip applying instrument for clip **12**, generally designated **120**, comprising opposing

pivotable jaws **125A** and **125B**. Jaws **125A** and **125B** have respective jaw recesses **127A** and **127B** adapted to engage and retain bosses **56**, **58**, **62** and **64** of clip **12** (see Figures 1 - 6). According to a method provided by the invention, Figure 8A illustrates clip applying instrument **120** in a position over clip **12** prior to inserting clip applying instrument **120** into a selected clip compartment **111**. Figure 8B illustrates clip-applying instrument **120** being inserted into selected clip compartment **111** to load clip **12** into locking engagement with clip applying instrument **120** (with bosses **56**, **58**, **62** and **64** retained in jaw recesses **127A** and **127B**). Figure 8C illustrates the subsequent step of extracting clip **12** from clip cartridge **100** by removing clip applying instrument **120** with clip **12** loaded therein.

One advantage of clip **12** disclosed herein is that although clip **12** provides a superior redundant locking mechanism over the prior art, it does not require a specially-modified clip applying instrument **120** for application to the tissue. Rather, a standard clip applying instrument **120**, such as is shown in Figures 8A through 8C, will work equally well with application of clip **12**, as disclosed herein.

In the preferred embodiment of clip **12**, as best shown in Figures 3 through 6, female locking member **40** of first leg **22** terminates at a sharp tip **68** with a cutting edge **49** extending at least along a portion of the length of the top surface of hook **41** and the distal end of second leg **24** includes a pair of sharp tissue-penetrating teeth **72** and **74**. As first and second legs **22** and **24** are moved to the closed position, sharp teeth **72** and **74** on second leg **24** and sharp tip **68** and cutting edge **49** on first leg **22** stretch, puncture and cut through tissue adjacent to the tissue selected for clamping. This cutting action prevents surrounding tissue from being caught in latch mechanism **14** as clip **12** is closed, thereby ensuring proper locking of latch mechanism **14**.

It will be understood that various details provided herein may be changed without departing from the scope of the presently disclosed material. Furthermore, the foregoing description is for the purpose of illustration only, and not for the purpose of limitation—the invention being defined by the claims.

WHAT IS CLAIMED IS:

1. A surgical clip with an interlocking latch mechanism, comprising:

a first leg and a second leg, each of said legs having an inner vessel-clamping surface and an outer surface, said inner surfaces being positioned in opposition to each other;

a flexible hinge section integrally disposed between and joining the proximal ends of said first and second legs; and

a female locking member positioned on the distal end of said first leg and comprising a resilient inwardly turned hook defining a recess in a mouth of said hook, and a male locking member positioned on the distal end of said second leg comprising at least one detent extending therefrom, said female and male locking members being formed whereby when said first and second leg members are moved from an open position to a closed position about said hinge section, said resilient hook of said female locking member is urged open to receive the detent of said male locking member in the recess thereof so as to removably lock said first and second leg members of said surgical clip in said closed position;

and further comprising a gusset within the mouth of said hook, wherein the at least one detent extending outwardly from said male locking member comprises two spaced-apart detents each having an inwardly turned lip extending generally toward said flexible hinge section for lockingly engaging said recess in the mouth of said hook.

2. The surgical clip of claim 1, wherein said gusset divides said recess in the mouth of said hook so as to form a bifurcated recess.

3. The surgical clip of claim 1, wherein said hinge section has a continuous concave inner surface and a continuous convex outer surface.

4. The surgical clip of claim 1, wherein said inner surface of said first leg has a concave radius of curvature between said hinge section and its distal end, said outer surface of said first leg has a convex radius of curvature between said hinge section and its distal end, said inner surface of said second leg has a convex radius of curvature between said hinge section and its distal end, and said outer surface of said second leg has a concave radius of curvature between said hinge section and its distal end.

5. The surgical clip of claim 1, further comprising a pair of bosses joined to opposite sides of said first leg between said hinge section and the distal end of said first leg, and a pair of bosses joined to opposite sides of said second leg at the distal end of said second leg.

6. The surgical clip of claim 5, wherein a portion of said pair of bosses joined to said first leg extend beyond said outer surface of said first leg to form a bridge section.

7. The surgical clip of claim 5, wherein said pair of bosses on said second leg each have a sharp tissue-penetrating tooth extending therefrom toward said first leg.

8. The surgical clip of claim 1, wherein at least one of said inner surfaces of said clip comprises a plurality of protrusions extending from said inner surface for providing improved vessel retention during and following closure of said clip.

9. The surgical clip of claim 8, wherein both of said inner surfaces of said clip comprise said plurality of protrusions.

10. The surgical clip of claim 9, wherein said hinge section has a continuous concave inner surface and a continuous convex outer surface.

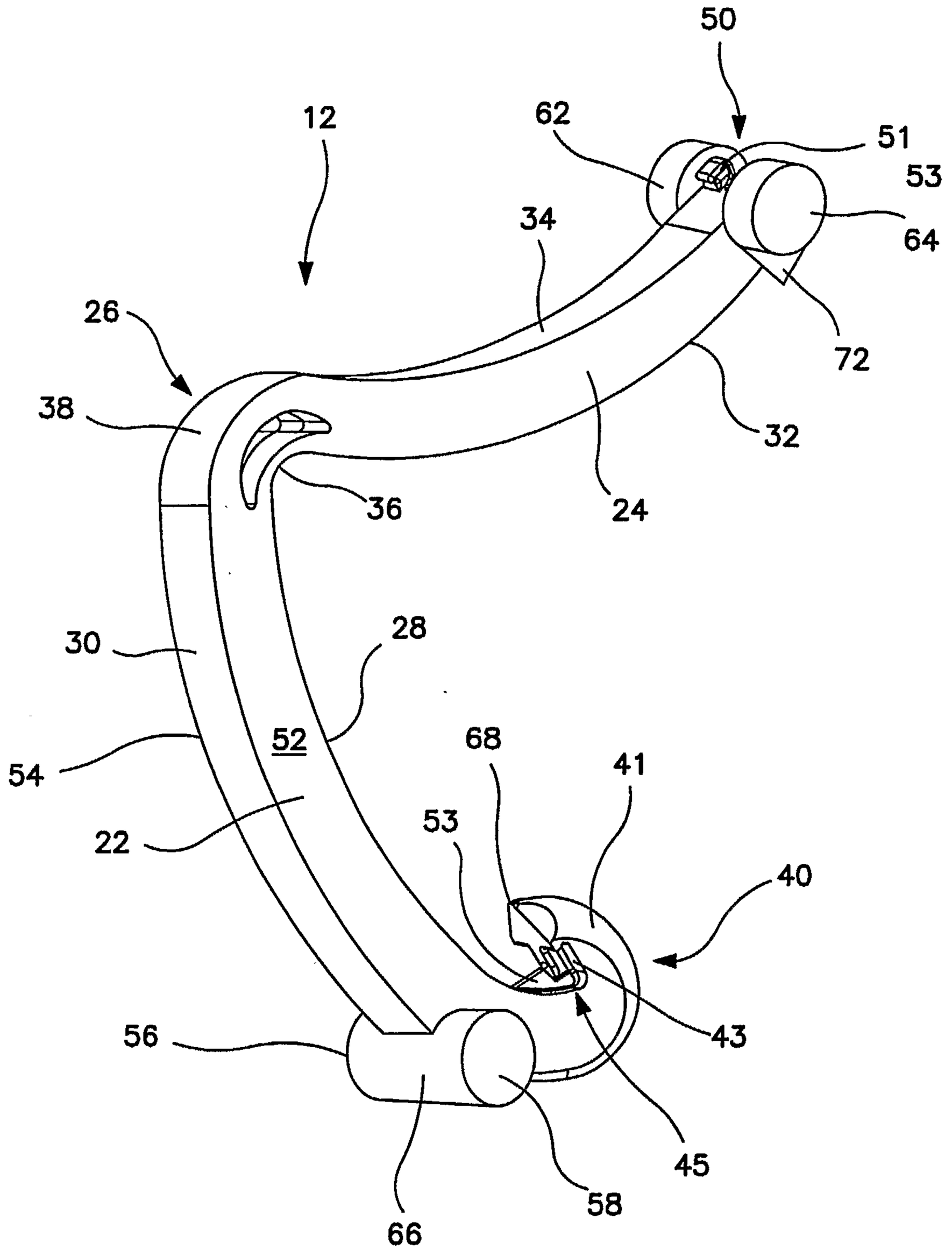
50
12
62
51
53
34
64
26
72
38
32
36
24
30
28
52
68
41
54
53
22
40
56
43
45
58
66

FIG. 1

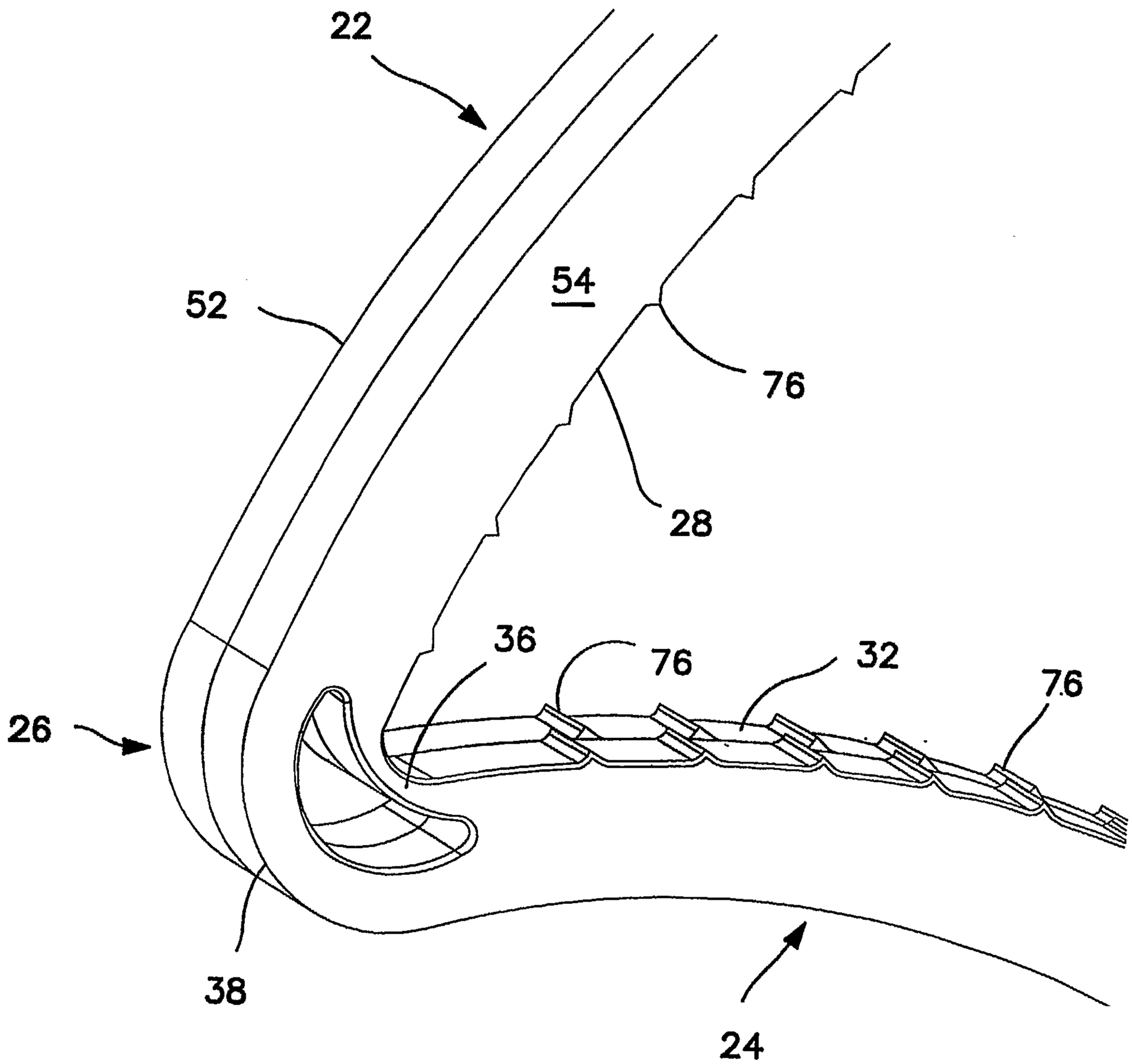

FIG. 2

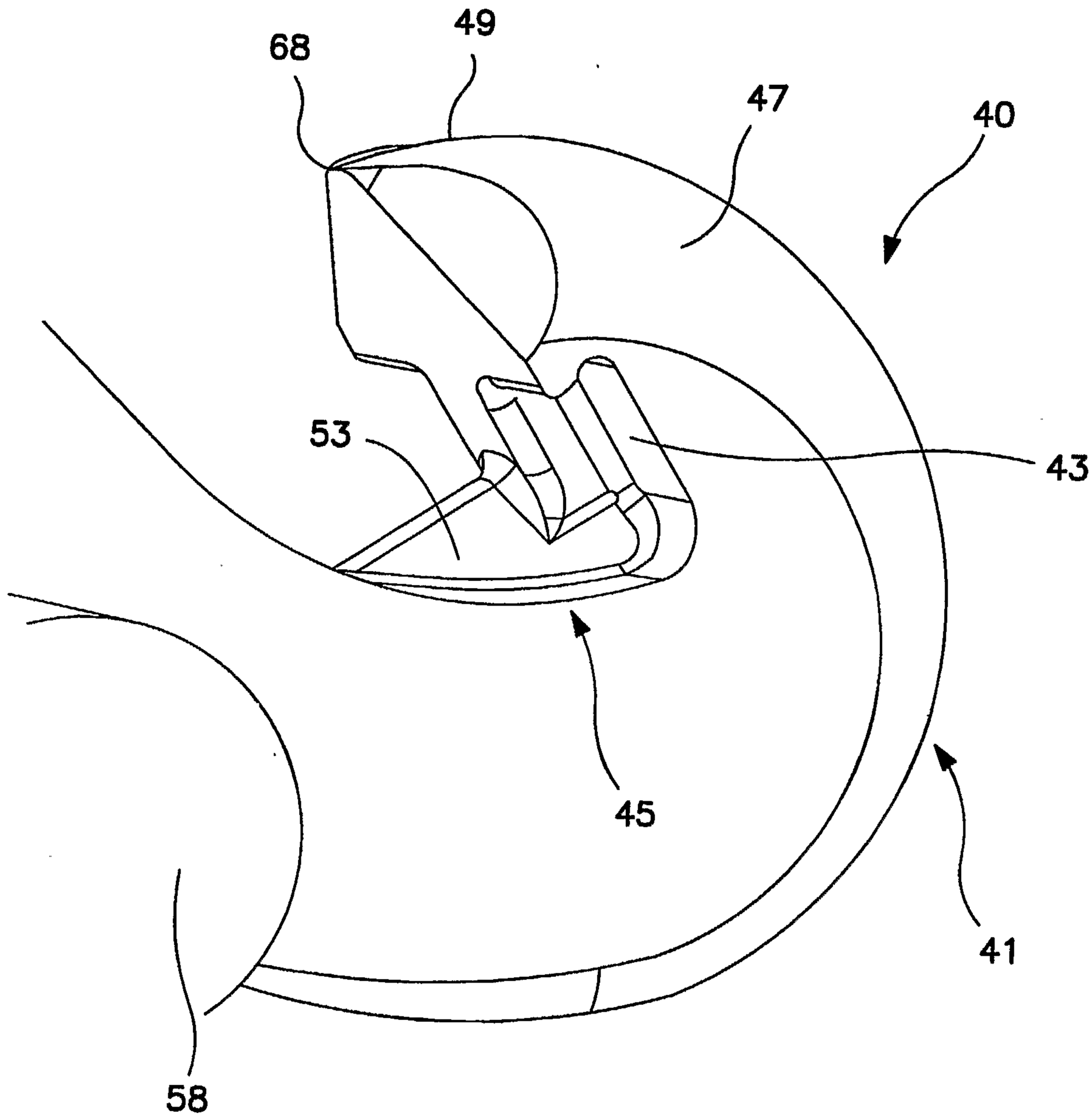

FIG. 3

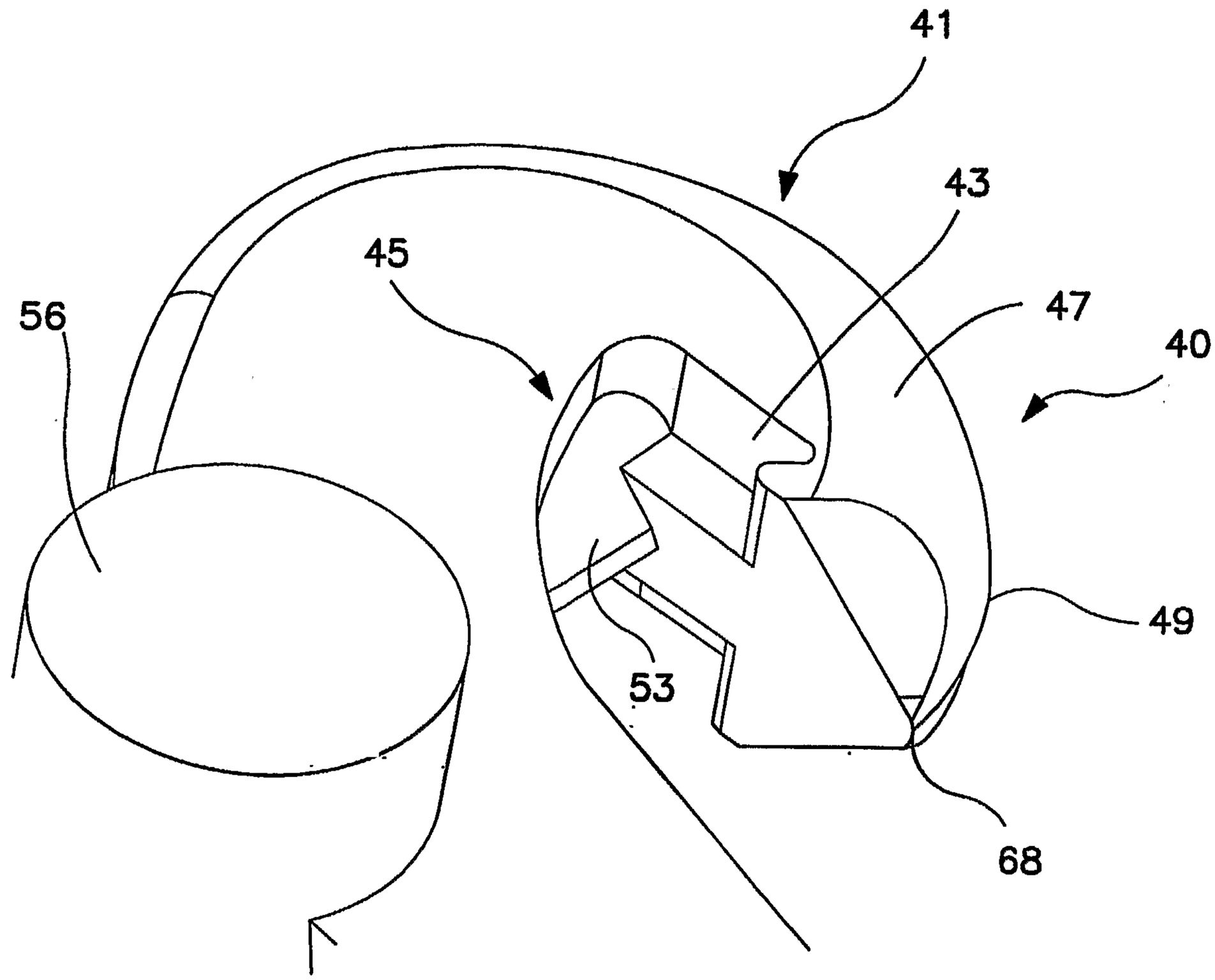

FIG. 4

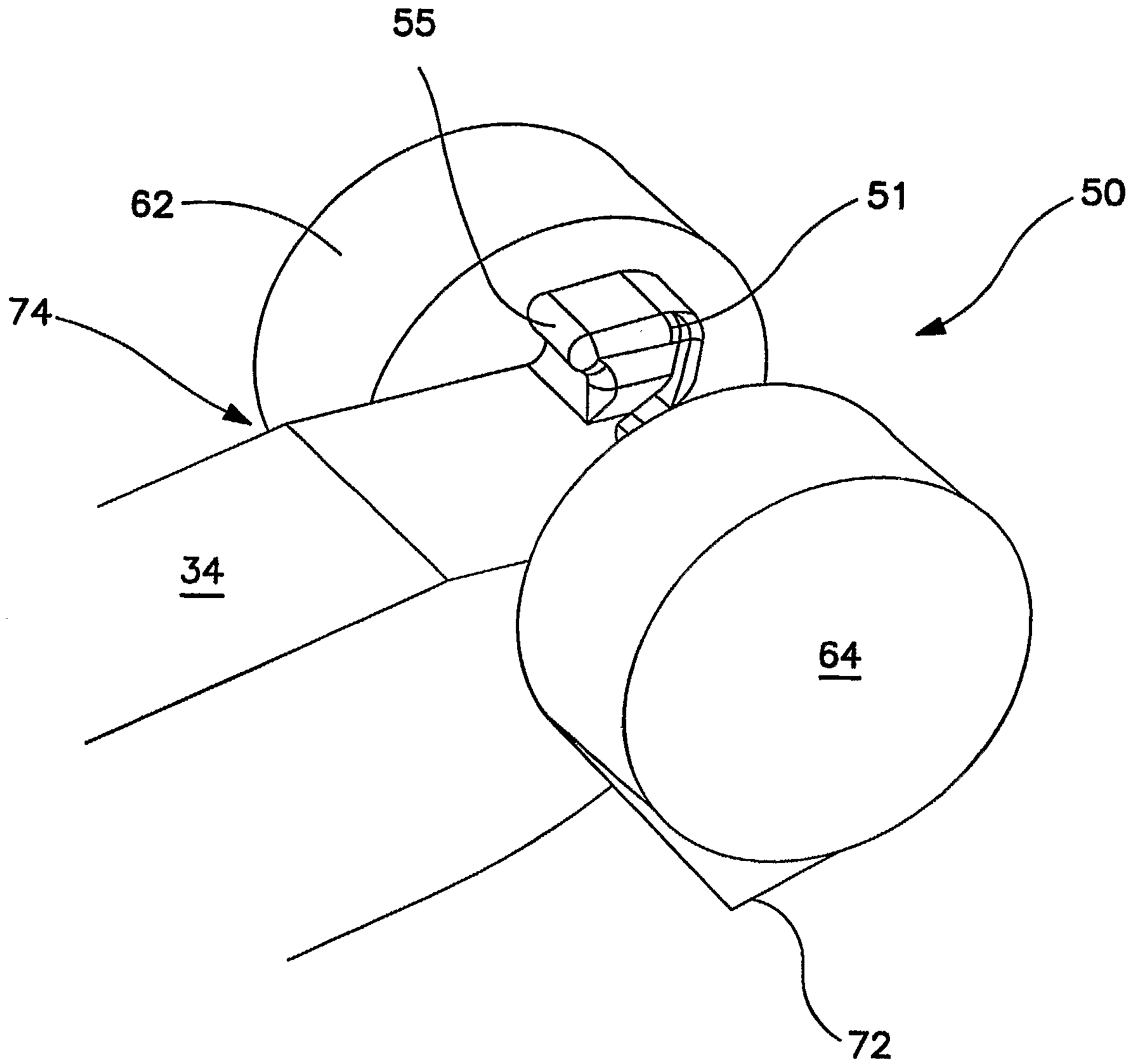

FIG. 5

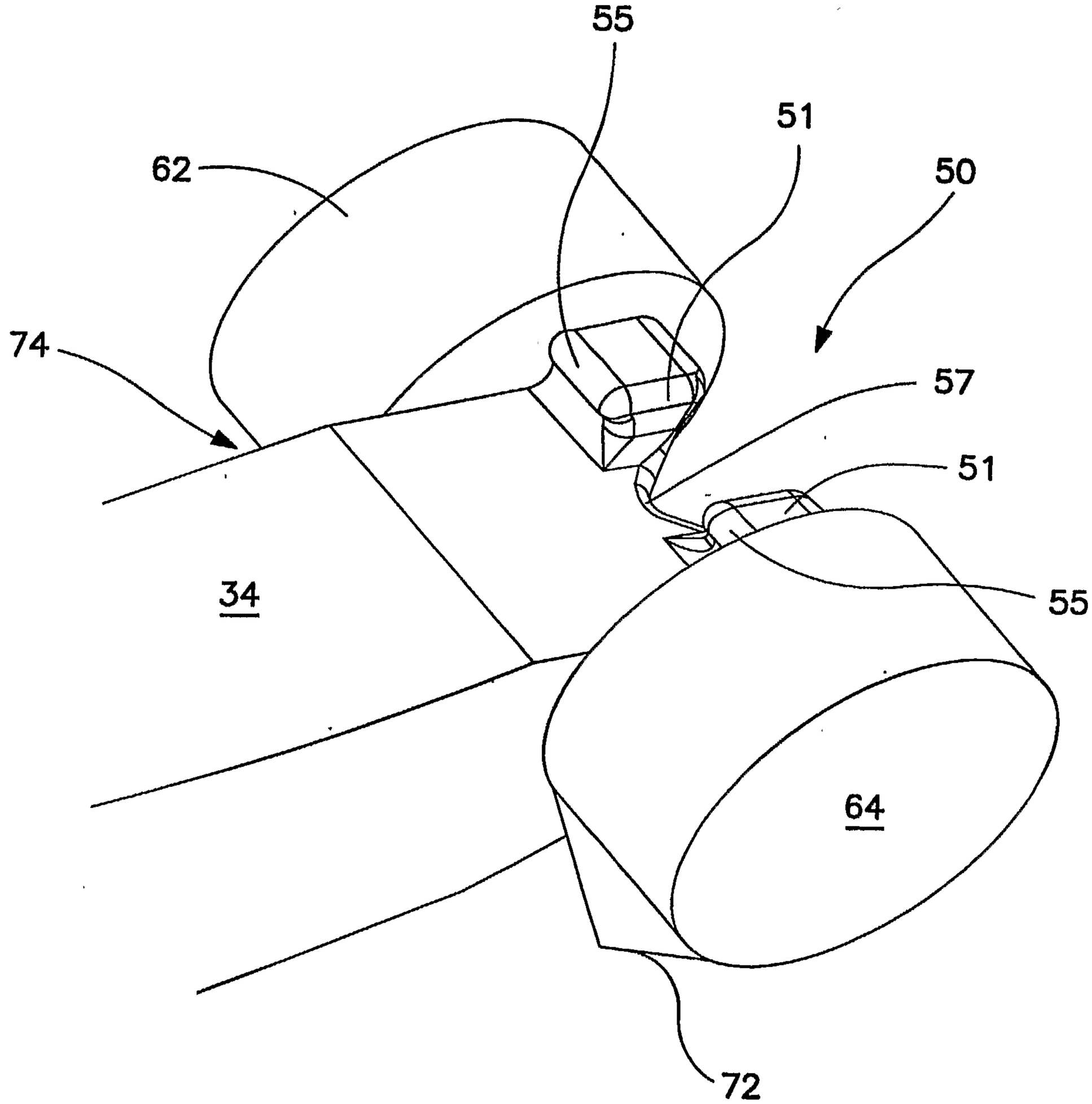

FIG. 6

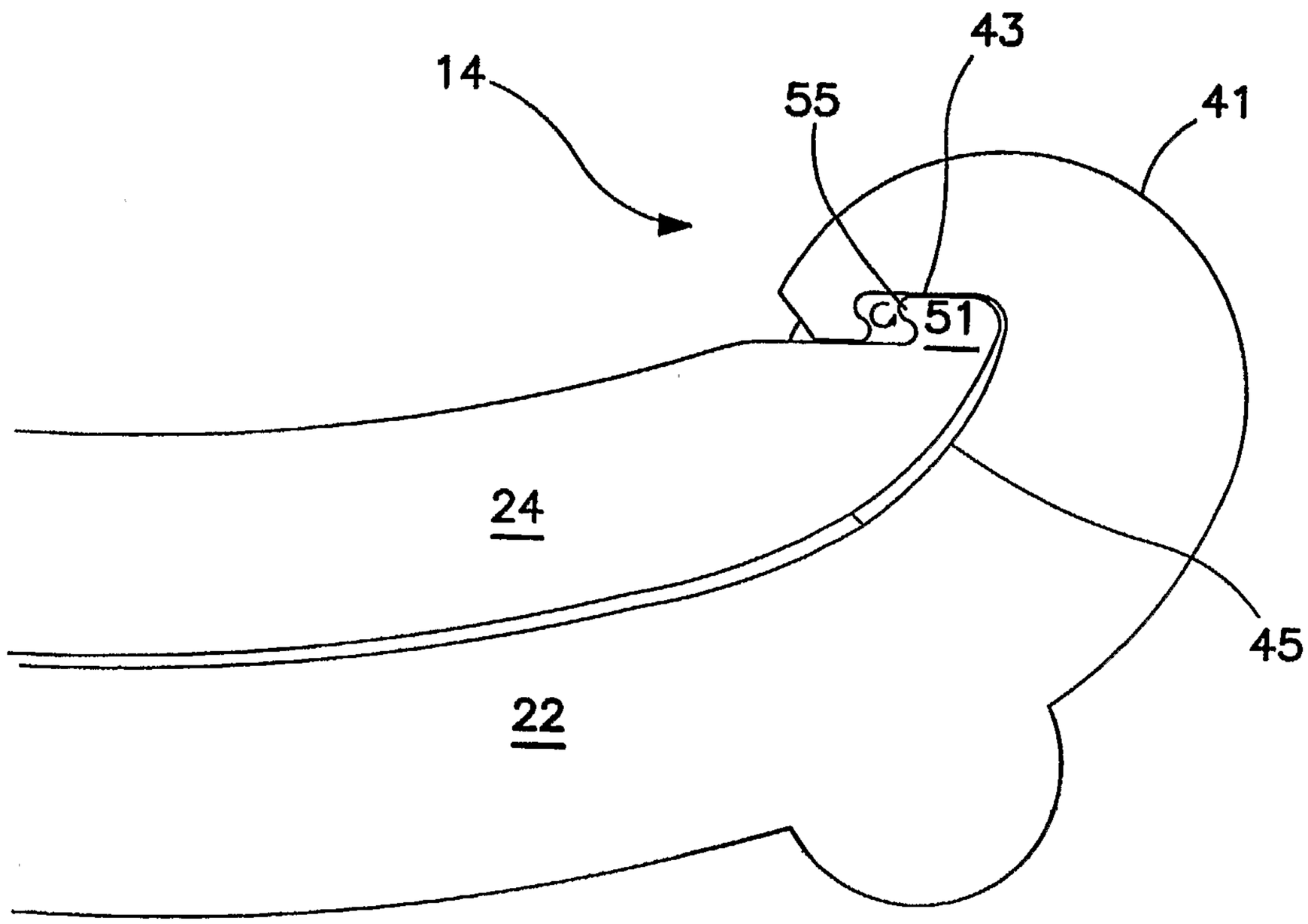

FIG. 7

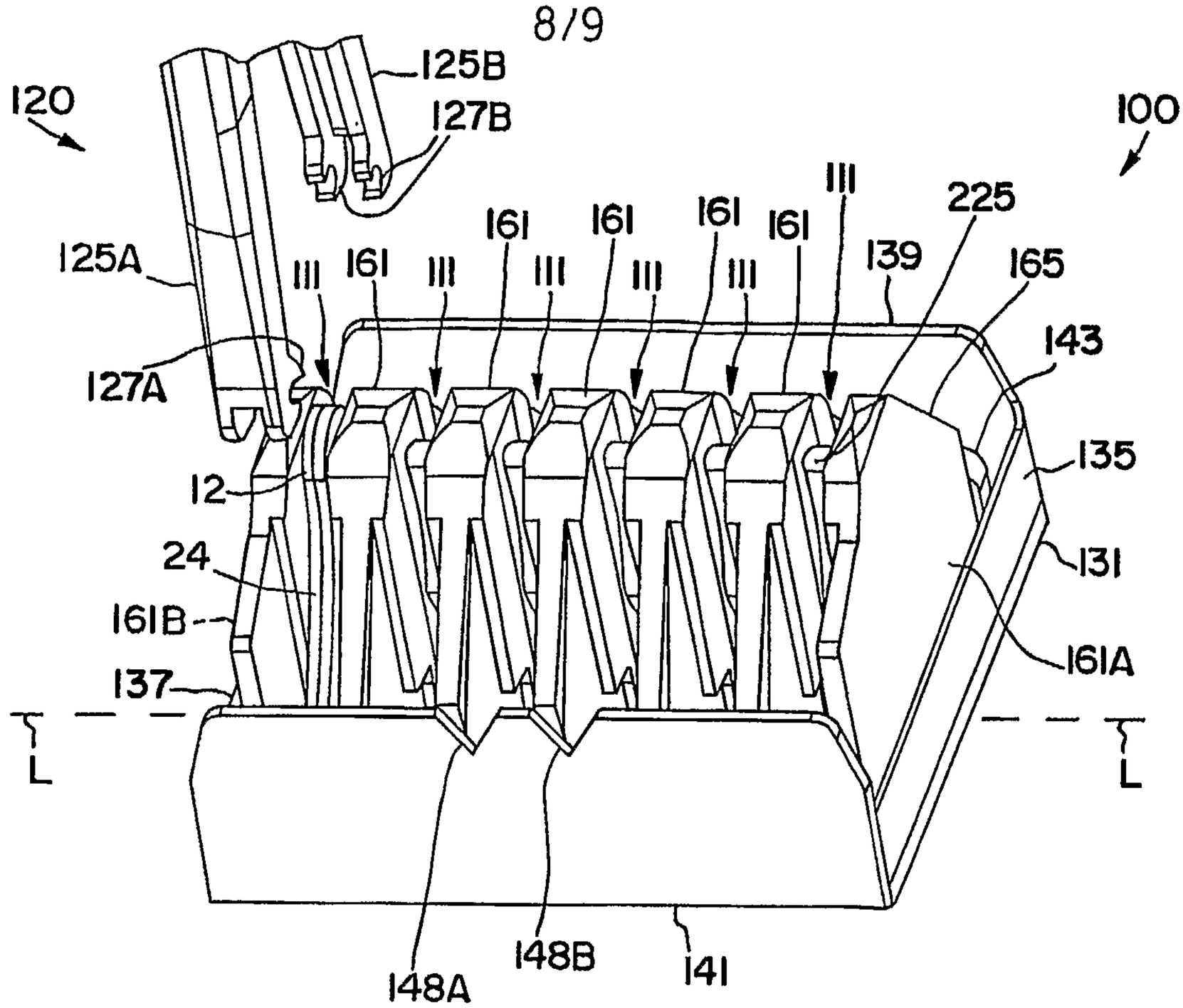
120
125B
127B
100
111
225
161
161
161
161
139
165
125A
111
161
111
111
111
111
143
127A
135
12
131
24
161B
161A
137
L
L
148B
141
148A

FIG. 8A

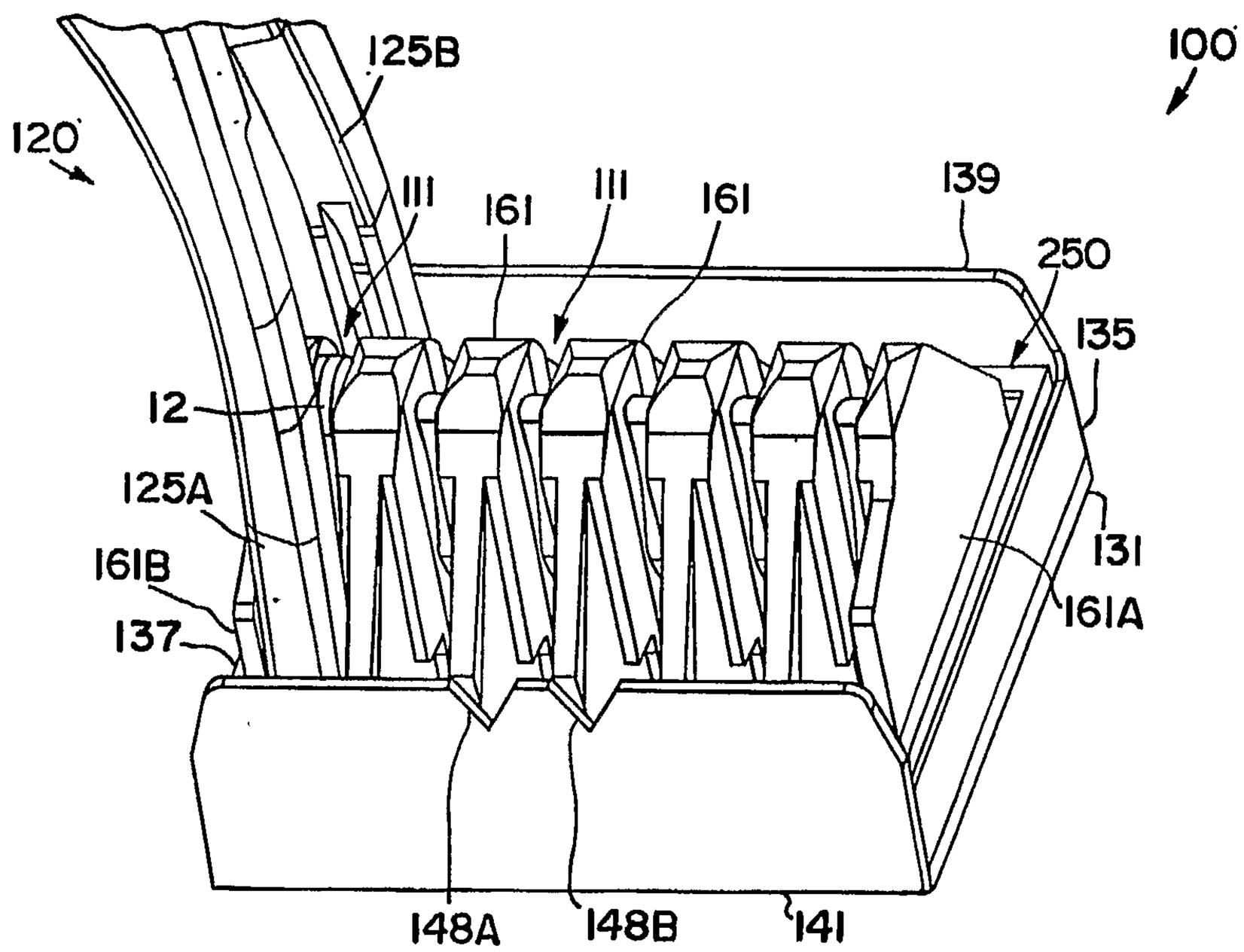
125B
100
120
111
161
111
161
139
250
135
12
125A
131
161B
161A
137
148A
148B
141

FIG. 8B

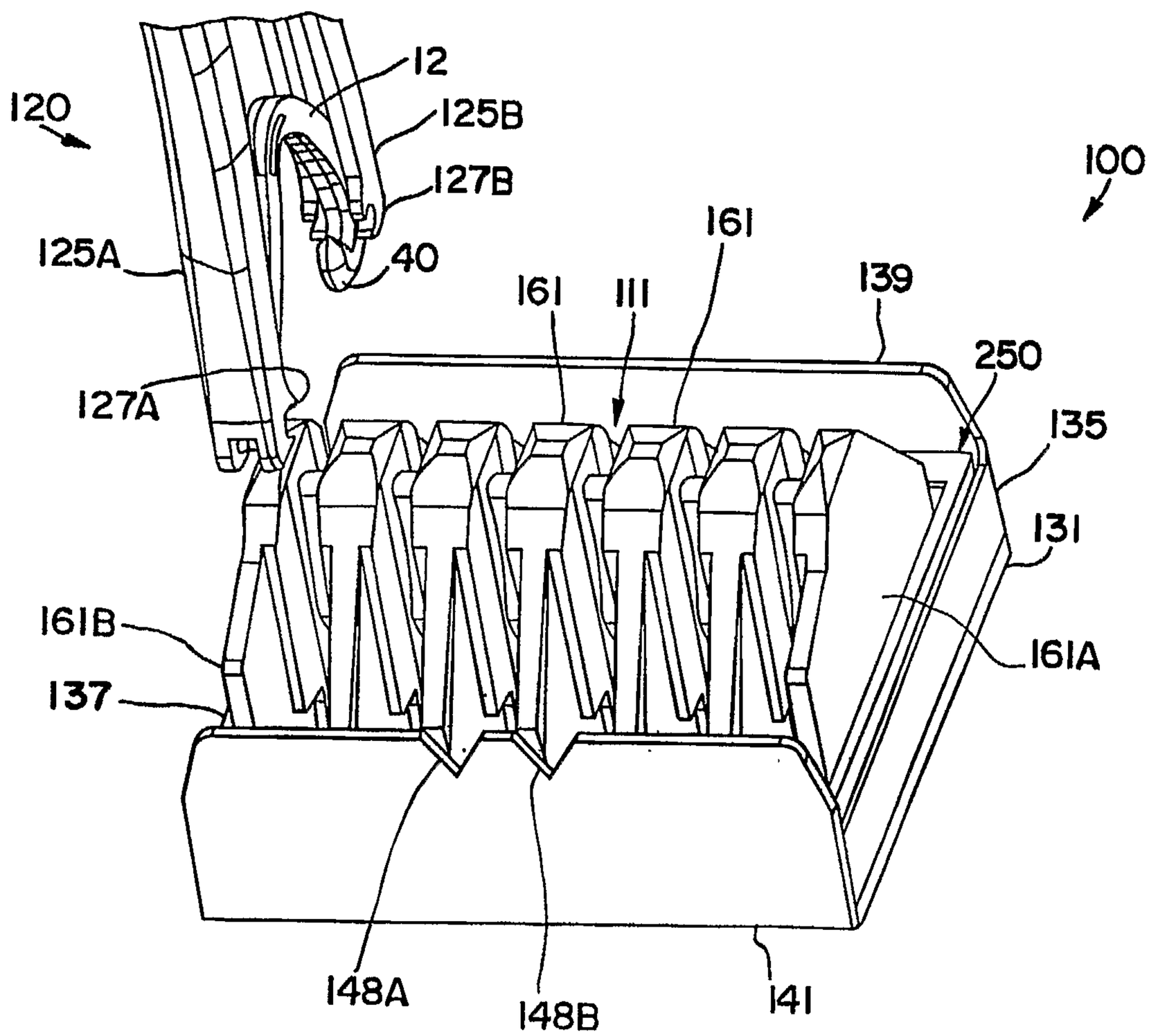
12
120
125B
127B
100
161
125A
40
161
111
139
250
127A
135
131
161B
161A
137
148A
148B
141

FIG. 8C

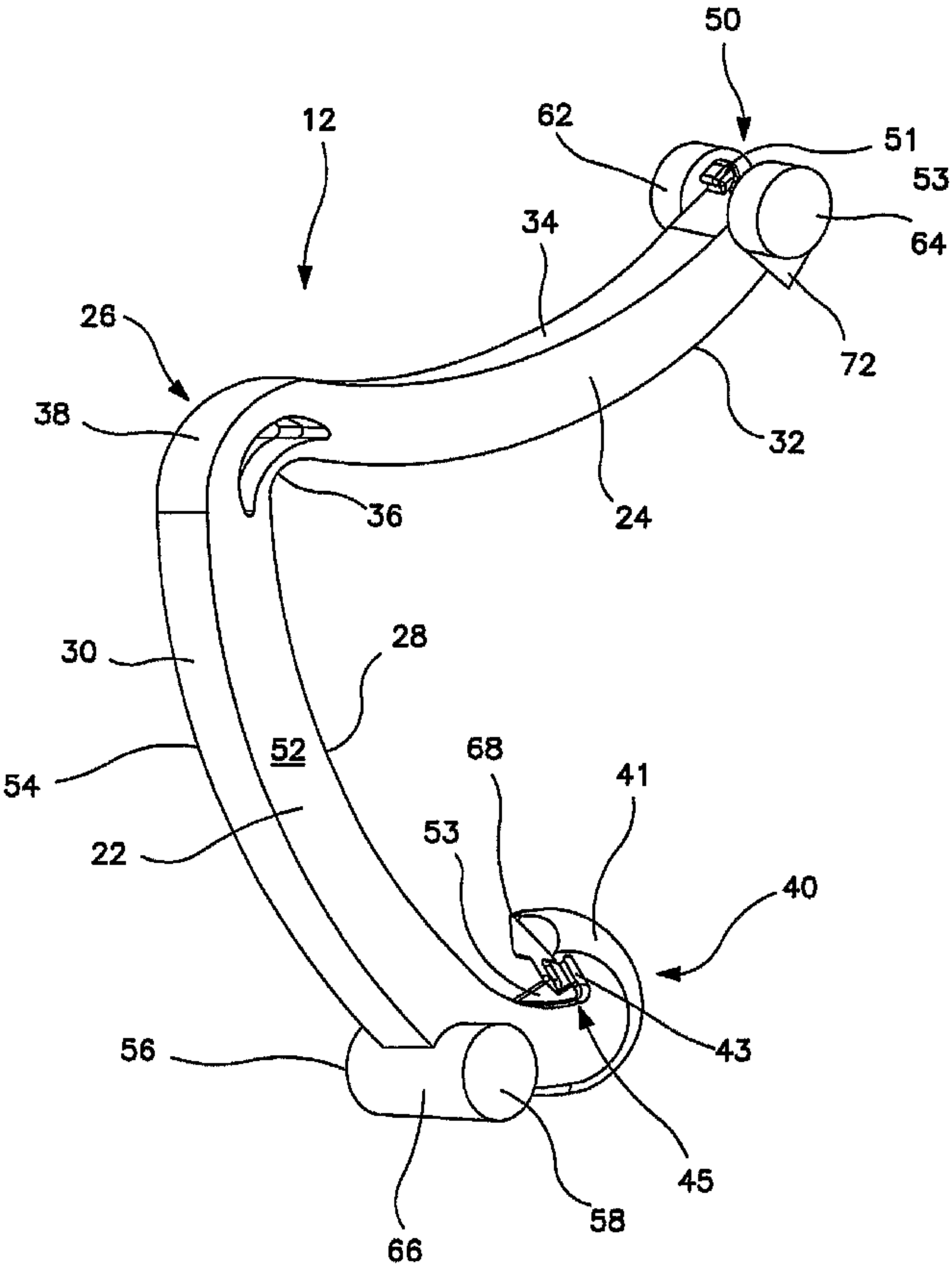
50
62
51
53
64
12
34
26
72
38
32
36
24
28
30
52
68
54
41
53
22
40
43
56
45
58
66