Office de la Propriété Intellectuelle du Canada
Un organisme d'Industrie Canada

Canadian Intellectual Property Office
An agency of Industry Canada

CA 2319886 C 2005/04/05

(11)(21) 2 319 886

(12) BREVET CANADIEN
CANADIAN PATENT

(13) C

(22) Date de dépôt/Filing Date: 2000/09/18

(41) Mise à la disp. pub./Open to Public Insp.: 2001/05/29

(45) Date de délivrance/Issue Date: 2005/04/05

(30) Priorité/Priority: 1999/11/29 (11-337404) JP

(51) Cl.Int.^{7}/Int.Cl.^{7} H04L 12/56, H04J 3/00

(72) Inventeur/Inventor:
WATANABE, EIICHI, JP

(73) Propriétaire/Owner:
KABUSHIKI KAISHA TOSHIBA, JP

(74) Agent: FETHERSTONHAUGH & CO.

(54) Titre : SYSTEME DE TRANSMISSION DE PAQUETS
(54) Title: PACKET-TRANSMITTING SYSTEM

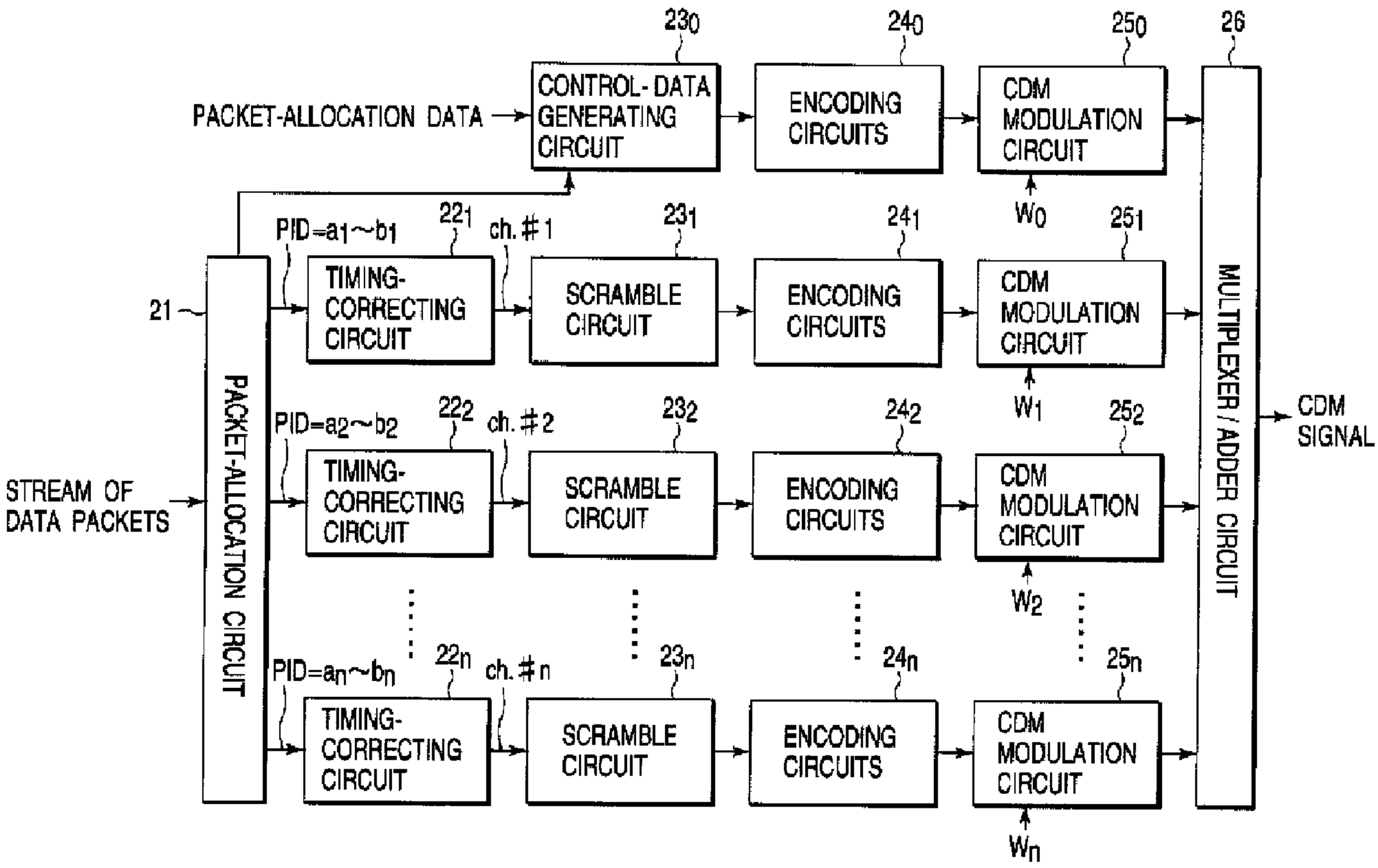

(57) Abrégé/Abstract:
A packet-transmitting system comprising a transmitter and a receiver. In the transmitter, the packet-allocating circuit receives a stream of packets. The circuit allocates the packets having PIDs a_1 to b_1 to the transmission channel #1, the packets having PIDs a_2 to b_2 to the transmission channel #2, and so forth. The circuit allocates the packets having PIDs a_N to b_N to the last transmission

CA 2319886 C 2005/04/05

(11)(21) 2 319 886

(13) C

(57) Abrégé(suite)/Abstract(continued):
channel #N. The control-data generating circuit time-divides and multiplexes packet-group data (groups of PIDs) representing the groups of packets to be transmitted via the channels #1 to #N, thereby generating control data to be transmitted through the transmission channel #0. The packets in the channels #0 to #N are multiplexed by a CDM system. In the receiver, the groups of packets, transmitted via the channels #1 to "N, are recognized from the control data transmitted via the channel #0, and only the signals transmitted via the channel designated by a user are extracted and reproduced. Thus, the receiver can therefore receive only the packet the user desires.

PACKET-TRANSMITTING SYSTEM

ABSTRACT OF THE DISCLOSURE

A packet-transmitting system comprising a transmitter and a receiver. In the transmitter, the packet-allocating circuit receives a stream of packets. The circuit allocates the packets having PIDs a_1 to b_1 to the transmission channel #1, the packets having PIDs a_2 to b_2 to the transmission channel #2, and so forth. The circuit allocates the packets having PIDs a_N to b_N to the last transmission channel #N. The control-data generating circuit time-divides and multiplexes packet-group data (groups of PIDs) representing the groups of packets to be transmitted via the channels #1 to #N, thereby generating control data to be transmitted through the transmission channel #0. The packets in the channels #0 to #N are multiplexed by a CDM system. In the receiver, the groups of packets, transmitted via the channels #1 to "N, are recognized from the control data transmitted via the channel #0, and only the signals transmitted via the channel designated by a user are extracted and reproduced. Thus, the receiver can therefore receive only the packet the user desires.

TITLE OF THE INVENTION

PACKET-TRANSMITTING SYSTEM

BACKGROUND OF THE INVENTION

The present invention relates to a packet-transmitting system for performing code-division multiplexing on a stream of data packets and parallel transmission of data packets.

A packet-transmitting system is known which comprises a transmitting station and a receiving station. In the transmitting station, error-correction codes are added to a stream to data packets, and the data packets are modulated and transmitted from the antenna. In the receiving station, the antenna receives signals of all bands. The signals are demodulated and subjected to error correction, thereby reproducing the data packets. The packets are supplied to a packet-selecting circuit, which selects the packets having the ID the user has designated.

Recently, digital broadcasting employing the conventional packet-transmitting system has been developed to broadcast a plurality of programs at the same time. In the packet-transmitting system, the programs are transmitted in the form of a stream of data packets from the transmitting station to the receivers. At each receiver, the user can enjoy only one program at a time in most cases. Nonetheless, the receiver receives all data packets and processes them

all. To process many data packets, the receiver must have a large-scale circuit configuration and consume much power. This inevitably increases the manufacturing and running costs of the receiver.

There is another problem with the conventional packet-transmitting system. Since all packets are modulated altogether, the parameters of error-correction codes or the characteristics of signals cannot be changed for each packet (program). Hence, the conventional packet-transmitting system cannot accomplish broadcasting in various manners desired.

BRIEF SUMMARY OF THE INVENTION

The present invention has been made in view of the foregoing. The invention may provide a packet-transmitting system in which the receiver receives only the packet the user needs and the parameters of error-correction codes or the characteristics of signals can be changed for each packet (program) to achieve broadcasting in various manners desired.

In accordance with one aspect of the invention, there is provided a packet-transmitting system having at least one control-signal transmission channel and a plurality of data-signal transmission channels. The system comprises a transmitter apparatus and a receiver apparatus.

The transmitter apparatus includes a packet-allocating section for receiving a stream of packets which includes groups of packets and for allocating each of the groups of packets to any one of the data-signal transmission channels, a packet-allocation data multiplexing section for receiving packet-allocation data representing the data-signal transmission channels allocated to the groups of packets by the packet-

allocating section and for time-dividing and multiplexing the packet-allocation data to the at least one control-signal transmission channel and a channel multiplexing section for multiplexing a signal in the at least one control-signal transmission channel and signals in the data-signal transmission channels, thereby to generate transmission signals.

The receiver apparatus includes a channel-dividing section for dividing the transmission signals into the at least one control-signal transmission channel and the data-signal transmission channels, a packet-allocation data acquiring section for reproducing the signal in the at least one data-signal transmission channel obtained by the channel-dividing section, thereby to acquire the packet-allocation data, a channel-selecting and reproducing section for selecting from the data-signal transmission channels divided by the channel-dividing section a data-signal transmission channel to which a designated packet group is allocated, in accordance with the packet-allocation data acquired by the packet-allocation data acquiring section, and reproducing the signal in a designated packet group, and a packet extracting section for extracting the packet data of the designated packet group reproducing a signal in the data-signal transmission channel selected by the channel-selecting section, from the signals in some of the data-signal transmission channel reproduced by the channel-selecting and reproducing section.

The packet-allocating section may allocate the packets of the same group to a plurality of data-signal transmission channels, and the packet-allocation data multiplexing section may time-divide and multiplex the packet allocation data of all the packets that are

brought together as group data to the control-signal transmission channel.

The group data may represent packet identifiers that the packets have.

The channel multiplexing section may multiplex the at least one signal in the control-signal transmission channel and the signals in the data-signal transmission channels, by a code dividing/multiplexing system.

The transmitter apparatus may comprise a time-management data correcting section for finding with respect to each of the data-signal transmission channels a difference between the timing of each packet subjected to a packet-allocating process by the packet-allocating section and the timing of the same packet being in the stream of packets and before being allocated by the packet-allocating section, and for correcting time-management data contained in each of the packets that has been subjected to the packet-allocating process, in accordance with the difference.

The transmitter apparatus may comprise a scramble section for scrambling the packets in the data-signal transmission channels and for time-dividing a scramble key to one of the data-signal transmission channels.

The scramble section may eliminate a difference between a signal delay in the transmission channel for transmitting the scramble key and a signal delay in the transmission channels for transmitting the packets, before the scramble key and packets are transmitted.

In accordance with another aspect of the invention, there is provided a transmitter apparatus for use in a packet-transmitting system having at least one control-signal transmission channel and a plurality of data-signal transmission channels. The transmitter apparatus

comprises a packet-allocating section for receiving a stream of packets which includes groups of packets and for allocating each of the groups of packets to any one of the data-signal transmission channels, a packet-allocating data multiplexing section for receiving packet-allocation data representing the packets allocated to each data-signal transmission channels allocated to the groups of packets by the packet-allocation section and for time-dividing and multiplexing the packet-allocation data to the at least one control-signal transmission channel and a channel multiplexing section for multiplexing a signal in the at least one control-signal transmission channel and signals in the data-signal transmission channels, thereby to generate transmission signals.

The packet-allocating section may allocate the packets of the same group to a plurality of data-signal transmission channels, and the packet-allocation data multiplexing section may time-divide and multiplex the packet allocation data of all the packets that are brought together as group data to the control-signal transmission channel.

The group data may represent packet identifiers that the packets have.

The channel multiplexing section may multiplex the at least one signal in the control-signal transmission channel and the signals in the data-signal transmission channels, by a code dividing/multiplexing system.

In accordance with another aspect of the invention, there is provided a receiver apparatus designed to be used in a packet-transmitting system having at least one control-signal transmission channel and a plurality of data-signal transmission channels, and designed to

receive transmission signals generated by receiving a stream of packets which includes groups of packets, and to allocate each of the groups of packets to any one of the data-signal transmission channels, and to time-divide and multiplex packet allocation data that represents the packets allocated to each data signal transmission channel to the at least one control signal transmission channel and multiplexing a signal in the at least one control-signal transmission channel and signals in the data signal transmission channels. The receiver apparatus comprises a channel dividing section for dividing the transmission signals into the at least one control-signal transmission channel and the data-signal transmission channels, a packet-allocation data acquiring section for reproducing the signal in the at least one data-signal transmission channel obtained by the channel-dividing section, thereby to acquire the packet-allocation data, a channel-selecting and reproducing section for selecting from the data-signal transmission channels divided by the channel-dividing section a data-signal transmission channel to which a designated packet group is allocated, in accordance with the packet-allocation data acquired by the packet-allocation data acquiring section and for reproducing the signal in the designated packet group, and a packet extracting section for extracting the packet data of the designated packet group from the signal in the data-signal transmission channel reproduced by the channel-selecting and reproducing section.

The transmission signal may be generated by allocating the packets of the same group to a plurality of data-signal transmission channels, and time-dividing and multiplexing the packet allocation data of all the

packets that are brought together as group data to the control-signal transmission channel.

The group data may represent packet identifiers that the packets have.

The transmission signal may be generated by multiplexing the at least one signal in the control-signal transmission channel and the signals in the data-signal transmission channels, by a code dividing/multiplexing system.

Additional features and advantages of the invention will be set forth in the description which follows, and in part will be obvious from the description, or may be learned by practice of the invention. The features and advantages of the invention may be realized and obtained by means of the instrumentalities and combinations particularly pointed out hereinafter.

BRIEF DESCRIPTION OF THE SEVERAL VIEWS OF THE DRAWING

The accompanying drawings, which are incorporated in and constitute a part of the specification, illustrate presently preferred embodiments of the invention, and together with the general description given above and the detailed description of the preferred embodiments given below, serve to explain the principles of the invention.

FIG. 1 is a block diagram showing the transmitter incorporated in a packet-transmitting system according to the present invention;

FIGS. 2A and 2B are diagrams, each illustrating the format of the sync signal used in the packet-transmitting system;

FIG. 3 is a diagram depicting the format of the data transmitted in the region D_2 of the sync signal shown in FIG. 2A;

FIG. 4 is a diagram showing a part of the data transmitted in the regions D_3 to D_{50} of the sync signal illustrated in FIG. 2A;

FIG. 5 is a diagram showing an example of CDM-channel data shown in FIG. 4;

FIG. 6 is a diagram illustrating an example of data added when the receiver is started, that is shown in FIG. 5;

FIG. 7 is a diagram showing another example of the data transmitted in the regions D_3 to D_{50} of the sync signal illustrated in FIG. 2A;

FIG. 8 is a diagram depicting one super frame contained in the sync signal illustrated in FIG. 2B;

FIGS. 9A and 9B are a timing chart explaining how the timing-correcting circuit shown in FIG. 1 processes a packet;

FIG. 10 is a block diagram of the receiver incorporated in the packet-transmitting system;

FIGS. 11A and 11B are block diagrams showing the transmitter and receiver, respectively, and explaining how the transmitter and receiver operate when the data

of packets of one group is too large to transmit via one transmission channel;

FIG. 12 is a block diagram of the scramble circuit shown in FIG. 1, which can correct a transmission delay;

FIG. 13 is a timing chart illustrating the relations that a stream of packets and a scramble key have in the scramble circuit, before and after the transmission delay is corrected;

FIG. 14 is a diagram showing a stream of MPEG2-T packets allocated to a plurality of CDM transmission channels;

FIG. 15 is a flowchart representing the sequence of selecting a program in the receiver of the packet-transmitting system; and

FIGS. 16A to 16D are diagrams illustrating the data items generated in some of the steps shown in FIG. 15.

DETAILED DESCRIPTION OF THE INVENTION

An embodiment of the present invention will be described in detail, with reference to the accompanying drawings.

FIG. 1 is a block diagram showing the transmitter incorporated in a packet-transmitting system according to the invention. It is assumed that the data input to the packet-transmitting system is TS (Transport Stream) type that is generally defined in MPEG2 systems. The

TS data consists of packets of programs (groups) that are time-divided and multiplexed.

The transmitter has a packet-allocating circuit 21 and a control-data generating circuit 23_0.

The packet-allocating circuit 21 is designed to receive packets and allocate them to transmission channels in accordance with the packet identifiers (PIDs) of those packet groups designated. More precisely, the circuit 21 allocates the packets identified by PIDs a_1 to b_1 to the transmission channel #1, the packets identified by PIDs a_2 to b_2 to the transmission channel #2, and so forth. Thus, the circuit 21 allocates the packets identified by PIDs a_N to b_N to the last transmission channel #N.

The control-data generating circuit 23_0 is designed to generate parameters, control data and the like to synchronize the transmission channels #1 to #N. (Hereinafter, the parameters, the control data, and the like will be collectively called "control data.") The circuit 23_0 receives the packet-allocation data from the packet-allocating circuit 21. The packet-allocation data shows which packet has been allocated to which transmission channel. The circuit 23_0 performs time division and multiplexing on the packet-allocation data, generating packet-group data (groups of PIDs) and adding the same to the control data.

The format of the control data will be described, with reference to FIGS. 2A and 2B and FIGS. 3 to 8.

The control data has been generated by time division and multiplexing of pilot symbols (PS) and frequency-diffused modulated signals (D), as is illustrated in FIG. 2A. Each PS is a signal having a length of 125 μsec and modulated every 250 μsec with a sync diffusion code only. Each frequency-diffused modulated signal has been generated by diffusing data (e.g., a parameter) with the same sync diffusion code and has a length of 125 μsec.

As shown in FIG. 2B, 51 pairs, each consisting of one pilot symbol and one frequency-diffused modulated signal, constitute one frame. Every six frames constitute one super frame.

Thus, each frame of the control data is composed of 51 pilot symbols and 51 frequency-diffused modulated signals D_1 to D_{51}. The signals D_1 to $D_{51}$are of the following types.

The signal D_1 is a sync word having a fixed pattern and used to synchronize the frame of the control data. The signal D_1 is a frequency-diffused modulated signal that has been generated by diffusing, for example, "01101010101101010101100110001010" with the sync diffusion code.

The signal D_2 is a sync word that indicates the ordinal number of the frame in the super frame. As

shown in FIG. 3, the signal D_2 is a frequency-diffused modulated signal generated by diffusing, with the sync diffusion code, eight identical 4-bit binary numbers. The signal D_2 can have five values ranging, for example, from 0x0 to 0x5. These five values correspond to the six frames that constitute one super frame.

The signals D_3 to D_{50} have been generated by effecting byte interleaving and convolution coding on data, then diffusing the data, thus generating a frequency-diffused modulated signal, and finally dividing the signal every 125 μsec. The data diffused consists, as shown in FIG. 4, identification data (8 bits), a receiver-starting signal (1 bit), CDM-channel data (568 bits), data (48 bits) added when the receiver is started, CRC check bits (16 bits) for correcting errors, and bytes (128 bits) for checking a Reed-Solomon (RS) code.

The identification data identifies the contents of the data that follows it. It is defined as is shown in, for example, Table 1.

Table 1

Value	Contents of data
0000000	Not allocated
0000001 - 0011111	Reserved
0100000	Composed of CDM channel-configuration data and receiver-starting signal
0100001 - 1111110	Reserved
1111111	Not allocated

The receiver-starting signal causes the receiver to start operating in case of emergency. For example, this one-bit signal is set at "1" to start the receiver. In any other case, the signal is set at "0."

As shown in FIG. 5, the CDM-channel data (568 bits) is composed of a start CDM channel number (8 bits) and ten CDM channel-configuration data items (56 × 10 bits). The CDM channel-configuration data items correspond to ten channels, respectively. Each CDM channel-configuration data item (56 bits) is composed of interleave mode (4 bits), convolution mode (4 bits), TS-ID (16 bits), reserved state (3 bit), PID minimum value (13 bits), version number (3 bits), and PID maximum value (13 bits).

The start CDM channel number indicates the CDM channel designated by the first CDM channel-configuration data item contained in the CDM-channel data. The nth CDM channel-configuration data item designates the start CDM channel number +n-1.

The interleave mode is data that designates the interleave size of the CDM channel. This mode can have, for example, the values shown in the following Table 2.

Table 2

Value	Interleave Size
0000	0
0001	53
0010	109
0011	218
0100	436
0101	654
0110	981
0111	1308
1000-1111	Reserved

The convolution mode is data that defines the ratio of encoding the convolution code of the CDM channel. It can have, for example, the values shown in Table 3.

Table 3

Value	Ratio of encoding convolution code
0000	Reserved
0001	Reserved
0010	Encoding ratio of 1/2
0011	Encoding ratio of 2/3
0100	Encoding ratio of 3/4
0101	Encoding ratio of 5/6
0110	Encoding ratio of 7/8
0111 - 1110	Reserved
1111	No allocation system

TS-ID is data that represents the number of the transport stream to be transmitted through the CDM channel. This data is, for example, 0xFFFF when there is no data to be transmitted through the CDM channel.

The reserved state is a storage area that can be used as an extension area in the future.

The PID minimum value is data representing the smallest value for the PID range of the TS packet to be transmitted through the CDM channel. If the same PID range is assigned to two or more CDM channels, the PID minimum value indicates that the CDM channels are bundled together to form a TS.

The version number is data that is incremented by one every time parameters such as interleave length and encoding ratio are updated.

The PID maximum value is data representing the greatest value for the PID range of the TS packet to be

transmitted through the CDM channel. If the same PID range is assigned to two or more CDM channels, the PID minimum value indicates that the CDM channels are bundled together to form a TS.

The data (48 bits) added when the receiver is started works effectively as auxiliary data for the receiver-starting signal. As shown in FIG. 6, this data is composed of a type data item (4 bits), a region ID data item (12 bits), an emergency program TS-ID (16 bits), and an emergency program number (16 bits). The type data items represents an emergency level or the like. The region ID data item represent the regions to which an emergency program will be broadcast. The emergency program TS-ID identifies the emergency program to be broadcast. The emergency program number indicates the number assigned to the emergency program.

The CRC check bits are data for use in examining data for errors. They are used in cyclic redundancy check (CRC) defined by the polynomial equation of $G(x) = x^{16} + x^{12} + x^5 + 1$.

The bytes for checking the Reed-Solomon code are used to check, for example, a compressed Reed-Solomon code (96, 80) that has been generated by adding "00h" (159 bytes) to the head of the input data bytes contained in a Reed-Solomon codes (255, 239) defined by, respectively, the polynomial equation of $g(x) = (x + \lambda^0)(x + \lambda^1)(x + \lambda^2) \ldots (x + \lambda^{15})$, where = 02h and

the polynomial equation of $P(x) = x^8 + x^4 + x^3 + x^2 + 1$.

The signals D_3 to D_{50} can be transmitted not only in the form of the CDM channel-configuration data and the data added at the start of the receiver (see FIG. 4), but also in the form of extension data (616 bits) that may consists of data items of various types.

D51 is a signal modulated with, for example, a diffused code for achieving synchronization and is stored in a reserved storage area.

The CDM channel-configuration data, the data added at the start of the receiver, the extension data and the like, all described above, are provided in the form of such a super frame as is illustrated in FIG. 8. In FIG. 8, the mark ※ indicates a receiver-starting signal.

The format of the control data, described with reference to FIGS. 2A and 2B and FIGS. 3 to 8, has a region of CDM channel-configuration data and a region of extension data. These regions of the control-data format are utilized in the present invention.

In the transmitter shown in FIG. 1, the packet-allocating circuit 21 allocates the input packets to the transmission channels, thus forming groups of packets. The packet groups are supplied to timing-correcting circuits 22_1 to 22_n, respectively. Each of the timing-correcting circuits 22_1 to 22_n corrects the

time lag that occurs when the packet-allocating circuit 21 extracts packets from the stream of packets input to it. How the time lag is corrected will be explained with reference to FIGS. 9A and 9B.

FIGS. 9A and 9B show how the kth timing-correcting circuit 22_k processes the packets input to it and having PIDs of a_K to b_K. The packets having PIDs of a_K to b_K may not have the same time positions as they have in the packet stream input to the packet-allocating circuit 21. Therefore, they may not be transmitted through the transmission channel #k, with those time position preserved. Hence, the timing-correcting circuit 22_k shifts the transmission timing of each packet. If the packets contain timing data (time management data) each, the timing-correcting circuit 22_k changes the timing data in each packet. If necessary, null packets are inserted in order to adjust the rate of transmitting packets. A typical example of the timing data is PCR (Program Clock Reference) data.

The packets output from the timing-correcting circuits 22_1 to 22_n are supplied to scramble circuit 23_1 to 23_n, respectively. In each scramble circuit, the packets are scrambled with a prescribed scramble key. The packets thus scrambled in the scramble circuit 23_1 to 23_n are supplied to error-correcting encoder circuit 24_1 to 24_n, respectively. The above-mentioned control data is supplied from the to an

error-correcting encoder circuit 24_0.

The error-correcting encoder circuit 24_0 performs coding processes, such as Reed-Solomon coding, byte interleaving, convolution coding and bit interleaving, on the control data supplied from the control-data generating circuit 23_0, thereby to correcting the control data. Similarly, each of the error-correcting encoder circuit 24_1 to 24_n performs these coding processes on the packet output from the corresponding scramble circuit, thereby correcting the packet. The control data corrected is supplied to a CDM modulation circuit 25_0. The outputs of the error-correcting encoder circuit 24_1 to 24_n are supplied to CDM modulation circuits 25_1 to 25_n, respectively. Codes W_0 to W_n are input to the modulation circuits 25_0 to 25_n, respectively. Using the codes W_0, the CDM modulation circuit 25_0 performs CDM modulation on the control data. Using the codes W1 to Wn, the CDM modulation circuits 25_1 to 25_n perform CDM modulation on the outputs of the error-correcting encoder circuit 24_1 to 24_n. The outputs of the CDM modulation circuit 25_0 to 25_n are supplied to a multiplexer/adder circuit 26. The multiplexer/adder circuit 26 multiplexes and adds outputs of the CDM modulation circuit 25_0 to 25_n, generating CDM signals. The CDM signals are transmitted from the transmitter through a prescribed transmission path, such as a ground-wave broadcast path,

a satellite broadcast path or a cable broadcast path.

FIG. 10 is a block diagram of the receiver incorporated in the packet-transmitting system. In the receiver, the antenna (not shown) receives the CDM signals transmitted from the transmitter. The CDM signals are supplied to a signal-distributing circuit 31. The circuit 31 distributes the CDM signals to n + 1 systems. The first system comprises a CDM demodulation circuit 32_0, an error-correcting circuit 33_0, and a CDM channel-selecting circuit 35. Each of the other systems comprises a CDM demodulation circuit, an error-correcting circuit, and a descramble circuit. The CDM signals distributed to the n+1 systems are supplied to the CDM demodulation circuits 32_0 to 32_n, respectively. The CDM demodulation circuits 32_0 to 32_n receive codes W_0 to W_n. Using the codes W_0 to W_n, the CDM demodulation circuits 32_0 to 32_n performs CDM demodulation on the CDM signals. The CDM signals, thus demodulated, are supplied to the error-correcting circuits 33_0 to 33_n. The error-correcting circuits 33_0 to 33_n perform coding processes, such as Reed-Solomon decoding, byte de-interleaving, convolution decoding and bit de-interleaving, on the control data supplied from the control-data generating circuit 23_0, thereby to correcting the CDM signals demodulated in CDM demodulation circuits 32_0 to 32_n. The control data and the data packets for n channels are thereby generated.

The control data is supplied to the CDM channel-selecting circuit 35. The CDM channel-selecting circuit 35 extracts group data from the control data. The group data represents various packet IDs. The circuit 35 selects the packet ID of the program the user has designated. Further, the circuit 35 identifies the channel for transmitting the program, in accordance with the group data containing the packet ID. Then, the circuit 35 generates only the code of the transmission channel thus identified.

That is, the control data designates various packet identifiers (PIDs) that will be transmitted via all CDM channels, as is illustrated in FIG. 8. The CDM channel-selecting circuit 35 receives the data showing these packet identifiers, determines which transmission channel should be used to transmit the packet ID of the program the user has designated, and generates the code Wk of the transmission channel for transmitting the packet ID. Hence, only the CDM signals on this transmission channel are demodulated.

The signals demodulated and selected in the processes described above are supplied to descramble circuits 24_1 to 24_n. The descramble circuits 24_1 to 24_n descramble the signals, which are output in the form of packets (i.e., programs desired).

In the packet-transmitting system, the receiver receives the control data, thereby recognizing the

packets of each of the groups transmitted through one transmission channel. Hence, the receiver can receive the packets of only the group the user desired. This serves to reduce the size and power consumption of the receiver and, ultimately, the cost of the receiver.

If the packets of one group may exceed the transmission capacity of one channel in terms of data amount, the packet-allocating circuit 21 may allocate these packets to two or more transmission channels. Alternatively, the transmitter and the receiver may be modified as is illustrated in FIG. 11A and FIG. 11B, respectively.

FIG. 11A shows a modified transmitter. If the packets (having PIDs a_k to a_k) of one group exceed the transmission capacity of the transmission channel #k in terms of data amount, the stream of packets output from a timing-correcting circuit 22_k and scrambled by a scramble circuit 23_k is supplied to a packet-allocating circuit 41_k. The packet-allocating circuit 41_k allocates the packets to error-correcting encoder circuits $24_{k(1)}$ to $24_{k(M)}$, thus providing additional transmission channels. The circuits $24_{k(1)}$ to $24_{k(M)}$ correct encode the packets, which are input to CDM modulation circuits $25_{k(1)}$ to $25_{k(M)}$. The circuits $25_{k(1)}$ to $25_{k(M)}$ perform CDM modulation on the packets. The packets thus modulated are supplied to a multiplexer/adder circuit 26. The multiplexer/adder

circuit 26 multiplexes and adds the packets output from the CDM modulation circuits $25_{k(1)}$ to $25_{k(M)}$, thereby generating CDM signals. Packet-group data, which shows the group of packets transmitted via the same additional transmission channel, is added to the control data.

FIG. 11B shows a modified receiver. In the modified receiver, a signal-distributing circuit 31 receives the CDM signals from the transmitter. The circuit 32 distributes the CDM signals in accordance with the additional channels provided in the transmitter. The CDM signals distributed to the channels #k(1) to #k(M) are supplied to CDM demodulation circuits $32_{k(1)}$ to $32_{k(M)}$, respectively. The circuit performs CDM demodulation on the CDM signals. The CDM signals thus demodulated are supplied to error-correcting circuits $33_{k(1)}$ to $33_{k(M)}$. The circuits $33_{k(1)}$ to $33_{k(M)}$ correct the CDM signals, which are supplied to a multiplexer/adder circuit 42_k. The multiplexer/adder circuit 42_k multiplexes and adds the CDM signals, thus generating a stream of packets. The packets are supplied to a descramble circuit 34_k, descrambled thereby and output from the receiver.

As mentioned above, the packets (having PIDs a_k to a_k) of one group output from the packet-allocating circuit 21 exceed the transmission capacity of the transmission channel #k in the transmitter. Therefore,

additional transmission channels #k(1) to #k(M) are provided in the transmitter. The timing-correcting circuit 22_k inserts null packets and corrects time data, as shown in FIGS. 9A and 9B, in order to transmit packets at a rate M times as high as the initial packet-transmitting rate. The packet-allocating circuit 41_k allocates the packets to the additional transmission channels #k(1) to #k(M), first to the channel #k(1), and last to the channel #k(M). The control data sets the PIDs of the packets to be transmitted via the channels #k(1) to #k(M) in the same range. In the receiver, it is known from the control data that a plurality additional channels provided for each transmission channel in the transmitter. The same error-correcting conditions, such as interleave length, encoding ratio, are applied to the error-correcting encoder circuits $24_{k(1)}$ to $24_{k(M)}$.

In the receiver, codes $W_{k(1)}$ to $W_{k(M)}$ are set in order to receive the packets transmitted via the CDM channels. Thus, the receiver receives streams of packets. First, the packets of the first stream are multiplexed, whereby the packets of the first group, which have PIDs a_k to b_k are received. Then, the packets of the second stream are multiplexed, and so forth. Finally, the packets of the last stream are multiplexed. Since the packets are sequentially multiplexed, stream by stream, the same

error-correcting conditions (e.g., interleave length, encoding ratio and the like) can be applied to the error-correcting encoder circuits $24_{k(1)}$ to $24_{k(M)}$. This makes it possible to restore the original packet stream in the receiver.

In the system that comprises the modified transmitter and receiver shown in FIG. 11A and 11B, respectively, the data packets of the same group are allocated to a plurality of channels. Therefore, the modified transmitter can transmit the packets of any group even if the packets of the group, i.e., the same program, exceed the transmission capacity of one channel.

In the modified transmitter (FIG. 11A), the input packets are not allocated to channels, in the first-stage component, i.e., the packet-allocating circuit 21. Rather, the packet-allocating circuit 41_k allocates the packets additional channels after the packets have been processed by the timing-correcting circuit 22_k and the scramble circuit 23_k. In the modified receiver (FIG. 11B), one descramble circuit and one timing-correcting circuit can process all groups of packets. This helps to prevent the circuit size of the receiver from increasing.

A transmission delay may exists between a transmission channel for transmitting a scramble key and a transmission channel for transmitting packets,

due to the difference in characteristic between the error-correction codes used in the respective transmission channels. Some process must be effected in the transmitter to eliminate such a transmission delay. A scramble circuit that is modified to eliminate the transmission delay will be described, with reference to FIG. 12.

FIG. 12 is a block diagram. The modified scramble circuit shown in FIG. 12 has the function of eliminating the transmission delay, unlike the scramble circuit 23_k illustrated in FIG. 11A. Assume that the delay time of the error-correcting encoder circuit in the transmitter and decoder circuit in the receiver of the CDM channel #1 is T1, whereas the delay time of the error-correcting encoder circuit in the transmitter and decoder circuit in the receiver of the CDM channel #k is T_M.

As shown in FIG. 12, the scramble circuit 23_k comprises a scramble process circuit 23_{k1}, a key-generating circuit 23_{k2}, two delay circuits 23_{k3} and 23_{k4}, and a control circuit 23_{k5}. In operation, the key-generating circuit 23_{k2} generates a scramble key. The scramble key is supplied via the delay circuit 23_{k3} to the scramble process circuit 23_{k1} and to the delay circuit 23_{k4}. The scramble process circuit 23_{k1} scrambles the stream of packets allocated to the CDM channel #k, by using the scramble key supplied from the

key-generating circuit 23_{k2}. The scramble key supplied to the delay circuit 23_{k4} is subjected to time division and multiplexing in the CDM channel #k.

The scramble circuit 23_k receives the data items representing the time delay T_1 of the CDM channel #1 and the time delay T_M of the CDM channel #k. The data items are input to the control circuit 23_{k5}. In accordance with the time delays T_1 and T_M, the control circuit 23_{k5} sets the delay times of the delay circuits 23_{k3} and 23_{k4} at D_M and D_1, respectively.

FIG. 13 is a timing chart showing the timing of transmitting data packets in the case where the delay time T_1 is longer than the delay time T_M, that is, $T_1 > T_M$. As shown in FIG. 13, the timing of transmitting the scramble key is delayed by $(T_1 - T_M)$ unless time correction is performed. Hence, the scrambling can be effected at a correct timing, by inserting a delay time D_M that is equal to the difference $(T_1 - T_M)$ in the delay circuit 23_{k3}. In the case where $T_1 < T_M$, too, the scrambling can be carried out at a correcting timing, by inserting the delay time D_1 that is equal to the difference $(T_M - T_1)$ in the delay circuit 23_{k4}.

FIG. 14 is a diagram showing a stream of MPEG2-T packets, which are allocated to a plurality of CDM transmission channels. The channel CDM#0 is a pilot channel (i.e., control channel) for transmitting the

TSIDs (i.e., groups of PIDs). The channels CDM#1 and CDM#2 transmits charge data (including the scramble-key data), program-arrangement data, program-related data and the like. The channels CDM#4 and CDM#5 are combined together to transmit packets having the same packet ID.

FIG. 15 is a flowchart representing the sequence of selecting a program in the receiver of the packet-transmitting system according to the present invention.

First, when the power-supply switch to the receiver is turned on, the receiver receives a pilot signal through the pilot channel #0 (Step S1). Then, the receiver acquires a table of CDM channels, TSIDs and PIDs, which is shown in FIG. 16A (Step S2). Further, the receiver receives TSIDs through the charging CDM channel #1 (Step S3). The receiver acquires an NIT, which is shown in FIG. 16B (Step S4).

Next, it is determined whether any user program number has been input to the receiver (S5). If NO in Step S5, it is determined whether or not a user program number exists in another TSID of the same 25 MHz band (Step S6). If YES in Step S6, the TSID received is changed (Step S7), and Steps S3 to S6 are repeated. If NO in Step S6, it is determined whether or not a user program number exists in a TSID of another 25 MHz band (Step S8). If YES in Step S8, the transponder is changed to another (Step S9). In this case, Steps S1

to S8 are repeated. If NO in Step S8, the receiver waits for a user program number.

If YES in Step S5, that is, if a user program number has been input to the receiver, the receiver acquires an PAT, which is shown in FIG. 16B (Step S10). The receiver then receives a CDM channel that contains a PMT (PID = p) (Step S11). Further, the receiver acquires a PMT, which is shown in FIG. 16D (Step S12). The receiver acquires an audio packet (PID = x) and a video packet (PID = y) (Step S13). Sound and an image are reproduced from the audio packet and the video packet, respectively (Step S14). Thus ends the sequence of selecting a program in the receiver.

The packet-transmitting system can be used to accomplish, for example, digital broadcasting. If so, in the receiver of the system, the input data packets, i.e., programs (groups), are time-divided and multiplexed. The packets are thereby allocated to a plurality of transmission channels. One or more of the transmission channels are assigned as channels for transmitting control data. Using the control data, the packet-group data, which shows the groups of packets to be transmitted via the transmission channel, respectively, is transmitted from the transmitter to the receiver. In the receiver, the packets of each group are recognized from the control data. The receiver can therefore easily select and receive only

the data packet the user desires. This reduces the size and power consumption of the receiver and, ultimately, the cost of the receiver.

Further, a program, i.e., one group of packets, can be transmitted even if the packets exceed the transmission capacity of one channel in terms of data amount. This is because the packets of the same group are allocated to a plurality of transmission channels. In the receiver, it can be known from the control data that these transmission channels are bundled together.

To allocate the packets to a plurality of transmission channels in the transmitter, the timing of each packet in the packet stream may not be maintained and may need to be shifted. Even in this case, the packets can be reproduced in the receiver, merely by correcting the time management data contained in each packet.

The transmission channel for transmitting a scramble key has a delay time and the transmission channel for transmitting packets scrambled may have different delay times because the error-correction codes used in the these channels differ in terms of their characteristic. In this case, the difference in delay time between these channels can be eliminated in the transmitter before the scramble key and the packets are transmitted via the two channels, respectively.

In the embodiment described above, packets are

multiplexed and transmitted by the CDM transmission system. Nonetheless, other various multiplex transmission systems, including the OFDM system, can be applied to the present invention.

As has been described, the present invention can provide a packet-transmitting system in which the receiver apparatus receives only the packet the user needs and the parameters of error-correction codes or the characteristics of signals cannot be changed for each packet to achieve broadcasting in various manners desired.

Additional advantages and modifications will readily occur to those skilled in the art. Therefore, the invention in its broader aspects is not limited to the specific details and representative embodiments shown and described herein. Accordingly, various modifications may be made without departing from the spirit or scope of the general inventive concept as defined by the appended claims and their equivalents.

THE EMBODIMENTS OF THE INVENTION IN WHICH AN EXCLUSIVE PROPERTY OR PRIVILEGE IS CLAIMED ARE DEFINED AS FOLLOWS:

1. A packet-transmitting system having at least one control-signal transmission channel and a plurality of data-signal transmission channels, said system comprising:

a transmitter apparatus including:

a packet-allocating section for receiving a stream of packets which includes groups of packets and for allocating each of the groups of packets to any one of the data-signal transmission channels:

a packet-allocation data multiplexing section for receiving packet-allocation data representing the data-signal transmission channels allocated to the groups of packets by the packet-allocating section and for time-dividing and multiplexing the packet-allocation data to the at least one control-signal transmission channel; and

a channel multiplexing section for multiplexing a signal in the at least one control-signal transmission channel and signals in the data-

signal transmission channels, thereby to generate transmission signals; and

a receiver apparatus including:

a channel-dividing section for dividing the transmission signals into the at least one control-signal transmission channel and the data-signal transmission channels;

a packet-allocation data acquiring section for reproducing the signal in the at least one data-signal transmission channel obtained by the channel-dividing section, thereby to acquire the packet-allocation data ;

a channel-selecting and reproducing section for selecting from the data-signal transmission channels divided by the channel-dividing section a data-signal transmission channel to which a designated packet group is allocated, in accordance with the packet-allocation data acquired by the packet—allocation data acquiring section, and reproducing the signal in a designated packet group, and

a packet extracting section for extracting the packet data of the designated packet group reproducing a signal in the data-signal transmission channel selected by the channel-selecting section, from the signals in some of the data-signal transmission channel reproduced by the channel-selecting and reproducing section.

2. The packet-transmitting system according to claim 1, wherein the packet-allocating section allocates the packets of the same group to a plurality of data-signal transmission channels, and the packet-allocation data multiplexing section time-divides and multiplexes the packet allocation data of all the packets that are brought together as group data to the control-signal transmission channel.

3. The packet-transmitting system according to claim 2, wherein the group data represents packet identifiers that the packets have.

4. The packet-transmitting system according to claim 1, wherein the channel multiplexing section multiplexes the at least one signal in the control-signal transmission channel and the signals in the data-

signal transmission channels, by a code dividing/multiplexing system.

5. The packet-transmitting system according to claim **1**, wherein the transmitter apparatus comprises a time-management data correcting section for finding with respect to each of the data-signal transmission channels a difference between the timing of each packet subjected to a packet-allocating process by the packet-allocating section and the timing of the same packet being in the stream of packets and before being allocated by the packet-allocating section, and for correcting time-management data contained in each of the packets that has been subjected to the packet-allocating process, in accordance with the difference.

6. The packet-transmitting system according to claim **1**, wherein the transmitter apparatus comprises a scramble section for scrambling the packets in the data-signal transmission channels and for time-dividing a scramble key to one of the data-signal transmission channels.

7. The packet-transmitting system according to claim **6**, wherein the scramble section eliminates a difference between a signal delay in the transmission channel

for transmitting the scramble key and a signal delay in the transmission channels for transmitting the packets, before the scramble key and packets are transmitted.

8. A transmitter apparatus for use in a packet-transmitting system having at least one control-signal transmission channel and a plurality of data-signal transmission channels, said transmitter apparatus comprising:

a packet-allocating section for receiving a stream of packets which includes groups of packets and for allocating each of the groups of packets to any one of the data-signal transmission channels;

a packet-allocating data multiplexing section for receiving packet-allocation data representing the packets allocated to each data-signal transmission channels allocated to the groups of packets by the packet-allocation section and for time-dividing and multiplexing the packet-allocation data to the at least one control-signal transmission channel; and

a channel multiplexing section for multiplexing a signal in the at least one control-signal transmission channel and signals in the data-signal transmission channels , thereby to generate transmission signals.

9. The transmitter apparatus according to claim **8,** wherein the packet-allocating section allocates the packets of the same group to a plurality of data-signal transmission channels, and the packet-allocation data multiplexing section time-divides and multiplexes the packet allocation data of all the packets that are brought together as group data to the control-signal transmission channel.

10. The transmitter apparatus according to claim **9,** wherein the group data represents packet identifiers that the packets have.

11. The transmitter apparatus according to claim **8,** wherein the channel multiplexing section multiplexes the at least one signal in the control-signal transmission channel and the signals in the data-signal transmission channels, by a code dividing/multiplexing system.

12. A receiver apparatus designed to be used in a packet-transmitting system having at least one control-signal transmission channel and a plurality of data-signal transmission channels, and designed to receive transmission signals generated by receiving a stream of packets which includes groups of packets, and to allocate each of the groups of packets to any one of the data-signal transmission channels, and to time-divide and multiplex packet allocation data that represents the packets allocated to each data signal transmission channel to the at least one control signal transmission channel and multiplexing a signal in the at least one control-signal transmission channel and signals in the data signal transmission channels, said receiver apparatus comprising:

a channel dividing section for dividing the transmission signals into the at least one control-signal transmission channel and the data-signal transmission channels;

a packet-allocation data acquiring section for reproducing the signal in the at least one data-signal transmission channel obtained by the channel-dividing section, thereby to acquire the packet-allocation data;

a channel-selecting and reproducing section for selecting from the data-signal transmission channels divided by the channel-dividing section a data-signal transmission channel to which a designated packet group is allocated, in accordance with the packet-allocation data acquired by the packet-allocation data acquiring section and reproducing the signal in the designated packet group; and

a packet extracting section for extracting the packet data of the designated packet group from the signal in the data-signal transmission channel reproduced by the channel-selecting and reproducing section.

13. The receiver apparatus according to claim **12**, wherein the transmission signal is generated by allocating the packets of the same group to a plurality of data-signal transmission channels, and time-dividing and multiplexing the packet allocation data of all the packets that are brought together as group data to the control-signal transmission channel.

14. The receiver apparatus according to claim **13**, wherein the group data represents packet identifiers that the packets have.

15. The receiver apparatus according to claim **12**, wherein the transmission signal is generated by multiplexing the at least one signal in the control-signal transmission channel and the signals in the data-signal transmission channels, by a code dividing/multiplexing system.

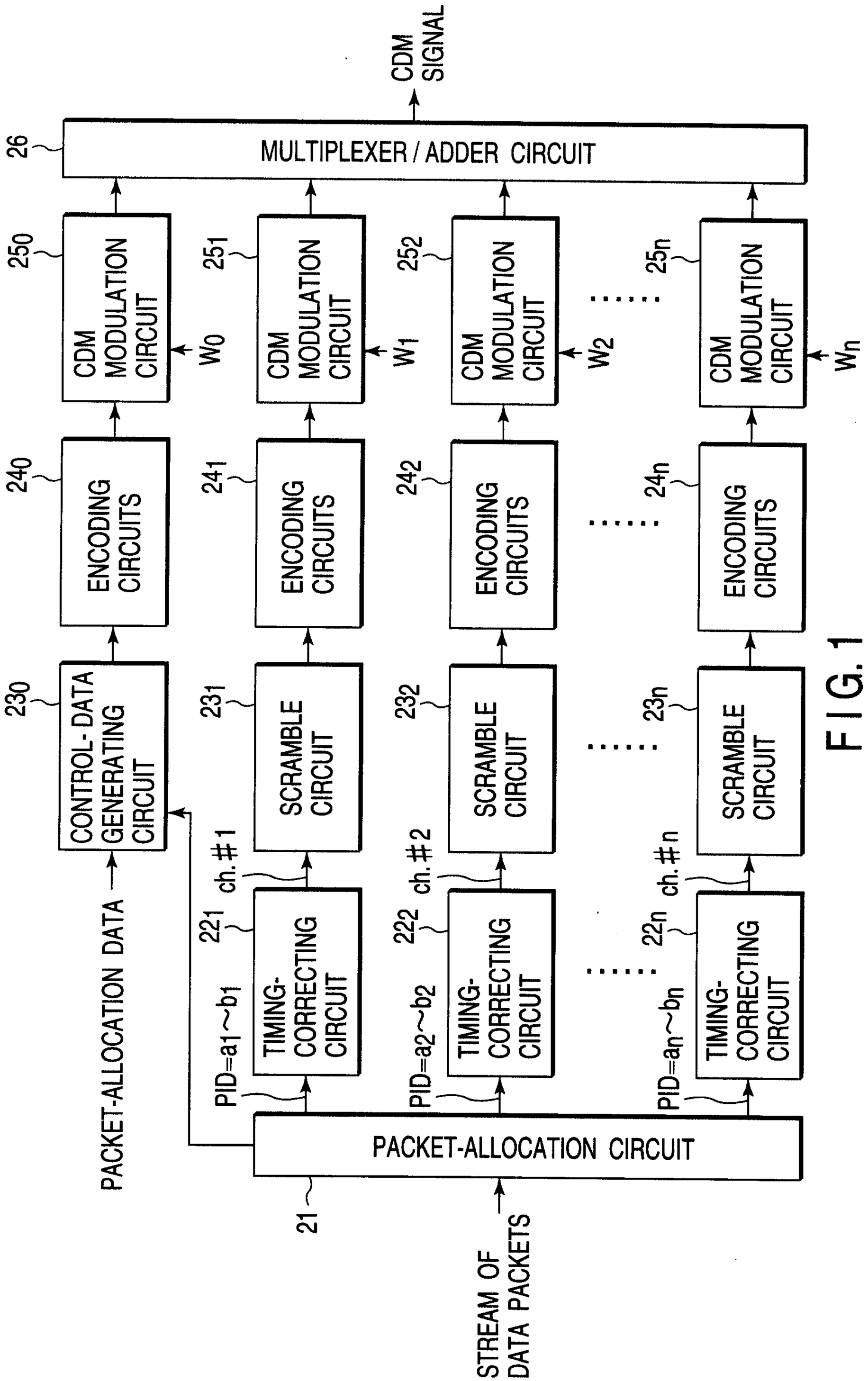
CDM SIGNAL
26
MULTIPLEXER / ADDER CIRCUIT
250
CDM MODULATION CIRCUIT
W0
251
CDM MODULATION CIRCUIT
W1
252
CDM MODULATION CIRCUIT
W2
25n
CDM MODULATION CIRCUIT
Wn
240
ENCODING CIRCUITS
241
ENCODING CIRCUITS
242
ENCODING CIRCUITS
24n
ENCODING CIRCUITS
230
CONTROL- DATA GENERATING CIRCUIT
231
SCRAMBLE CIRCUIT
232
SCRAMBLE CIRCUIT
23n
SCRAMBLE CIRCUIT
PACKET-ALLOCATION DATA
ch. #1
ch. #2
ch. #n
221
TIMING-CORRECTING CIRCUIT
222
TIMING-CORRECTING CIRCUIT
22n
TIMING-CORRECTING CIRCUIT
PID=a1~b1
PID=a2~b2
PID=an~bn
PACKET-ALLOCATION CIRCUIT
21
STREAM OF DATA PACKETS

FIG. 1

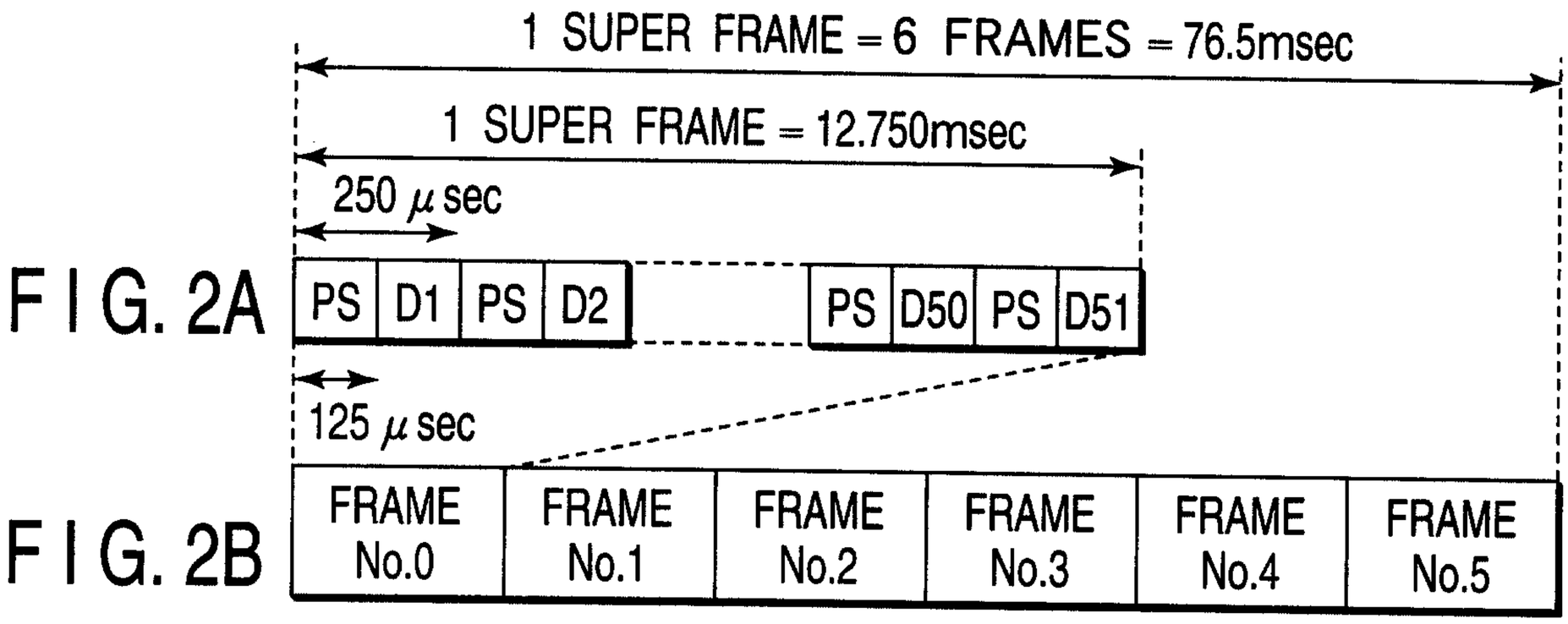

FIG. 2A

FIG. 2B

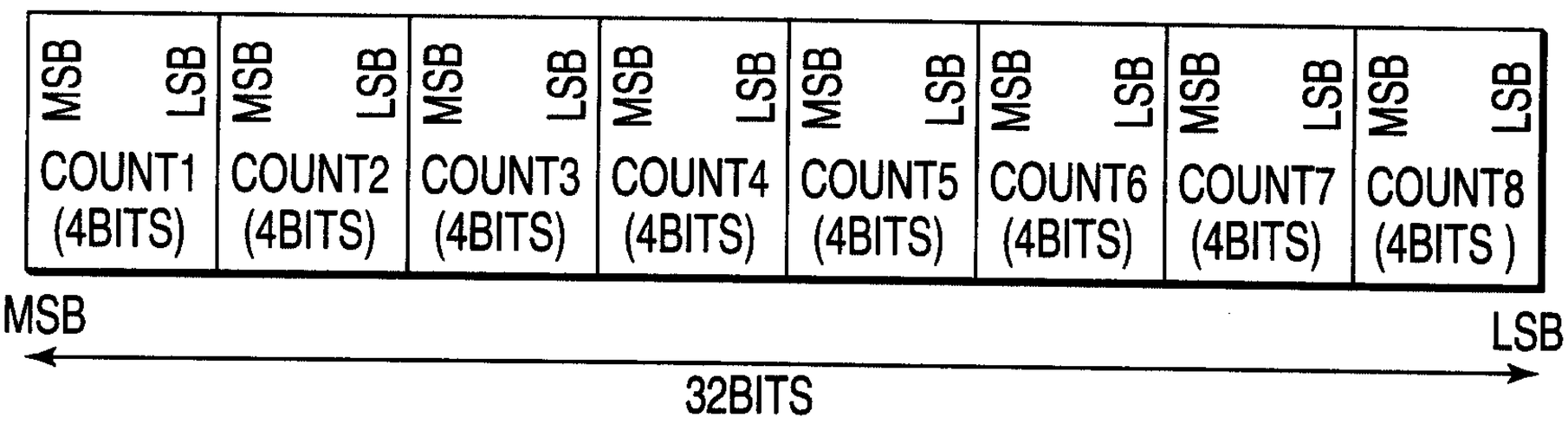

FIG. 3

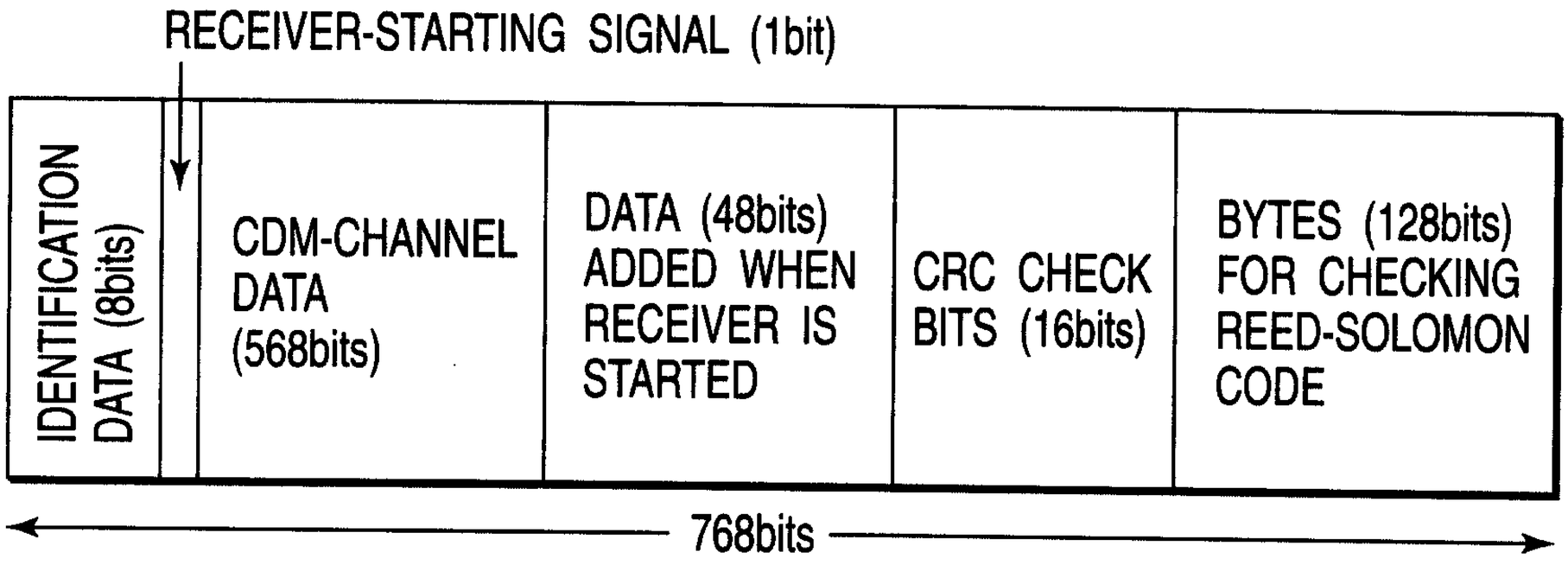

FIG. 4

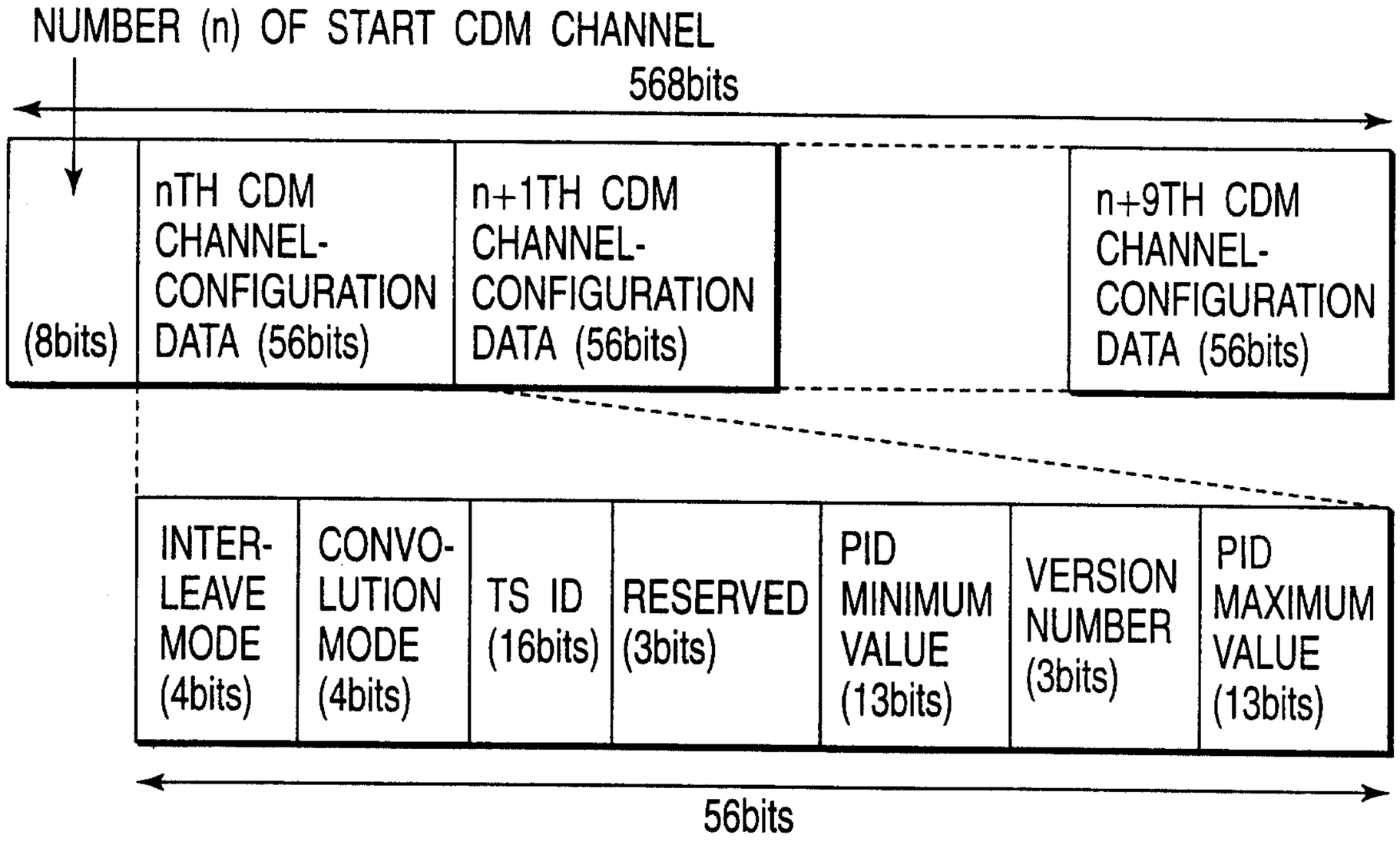

FIG. 5

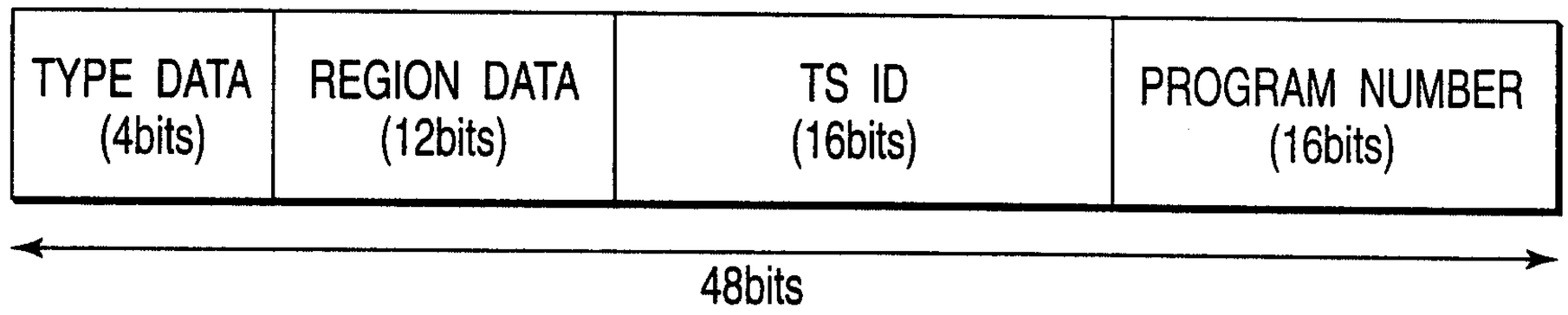

FIG. 6

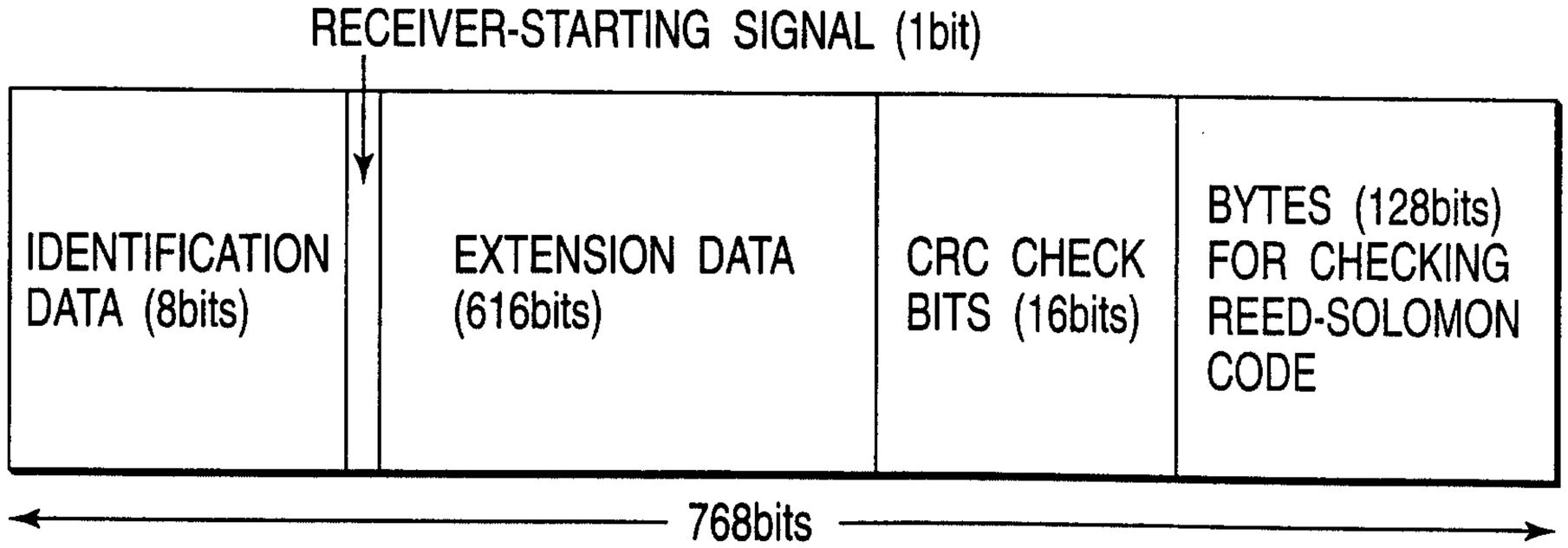

FIG. 7

IDENTIFI-CATION DATA	※	CDM CHANNEL-CONFIGURATION DATA (#1～#10)	DATA ADDED AT THE START OF RECEIVER	CRC CHECK BITS	BYTES FOR CHECKING RS CODE
IDENTIFI-CATION DATA	※	CDM CHANNEL-CONFIGURATION DATA (#11～#20)	DATA ADDED AT THE START OF RECEIVER	CRC CHECK BITS	BYTES FOR CHECKING RS CODE
IDENTIFI-CATION DATA	※	CDM CHANNEL-CONFIGURATION DATA (#21～#30)	DATA ADDED AT THE START OF RECEIVER	CRC CHECK BITS	BYTES FOR CHECKING RS CODE
IDENTIFI-CATION DATA	※	CDM CHANNEL-CONFIGURATION DATA (#31～#40)	DATA ADDED AT THE START OF RECEIVER	CRC CHECK BITS	BYTES FOR CHECKING RS CODE
IDENTIFI-CATION DATA	※	CDM CHANNEL-CONFIGURATION DATA (#41～#50)	DATA ADDED AT THE START OF RECEIVER	CRC CHECK BITS	BYTES FOR CHECKING RS CODE
IDENTIFI-CATION DATA	※	CDM CHANNEL-CONFIGURATION DATA (#51～#60)	DATA ADDED AT THE START OF RECEIVER	CRC CHECK BITS	BYTES FOR CHECKING RS CODE
IDENTIFI-CATION DATA	※	CDM CHANNEL-CONFIGURATION DATA (#61～#63)	DATA ADDED AT THE START OF RECEIVER	CRC CHECK BITS	BYTES FOR CHECKING RS CODE
IDENTIFI-CATION DATA	※	EXTENSION DATA		CRC CHECK BITS	BYTES FOR CHECKING RS CODE
IDENTIFI-CATION DATA	※	EXTENSION DATA		CRC CHECK BITS	BYTES FOR CHECKING RS CODE
IDENTIFI-CATION DATA	※	EXTENSION DATA		CRC CHECK BITS	BYTES FOR CHECKING RS CODE
IDENTIFI-CATION DATA	※	EXTENSION DATA		CRC CHECK BITS	BYTES FOR CHECKING RS CODE
IDENTIFI-CATION DATA	※	EXTENSION DATA		CRC CHECK BITS	BYTES FOR CHECKING RS CODE

FIG. 8

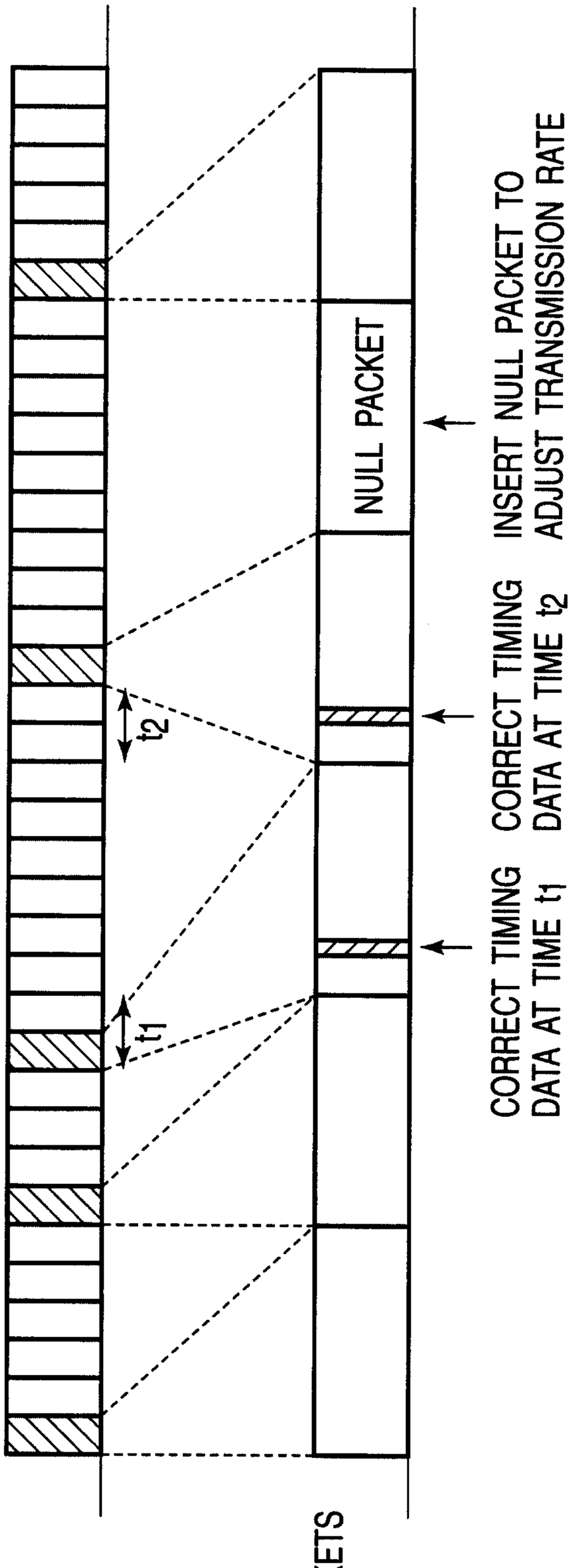

FIG. 9A

EXTRACT PACKETS HAVING PIDs a_k TO b_k

FIG. 9B

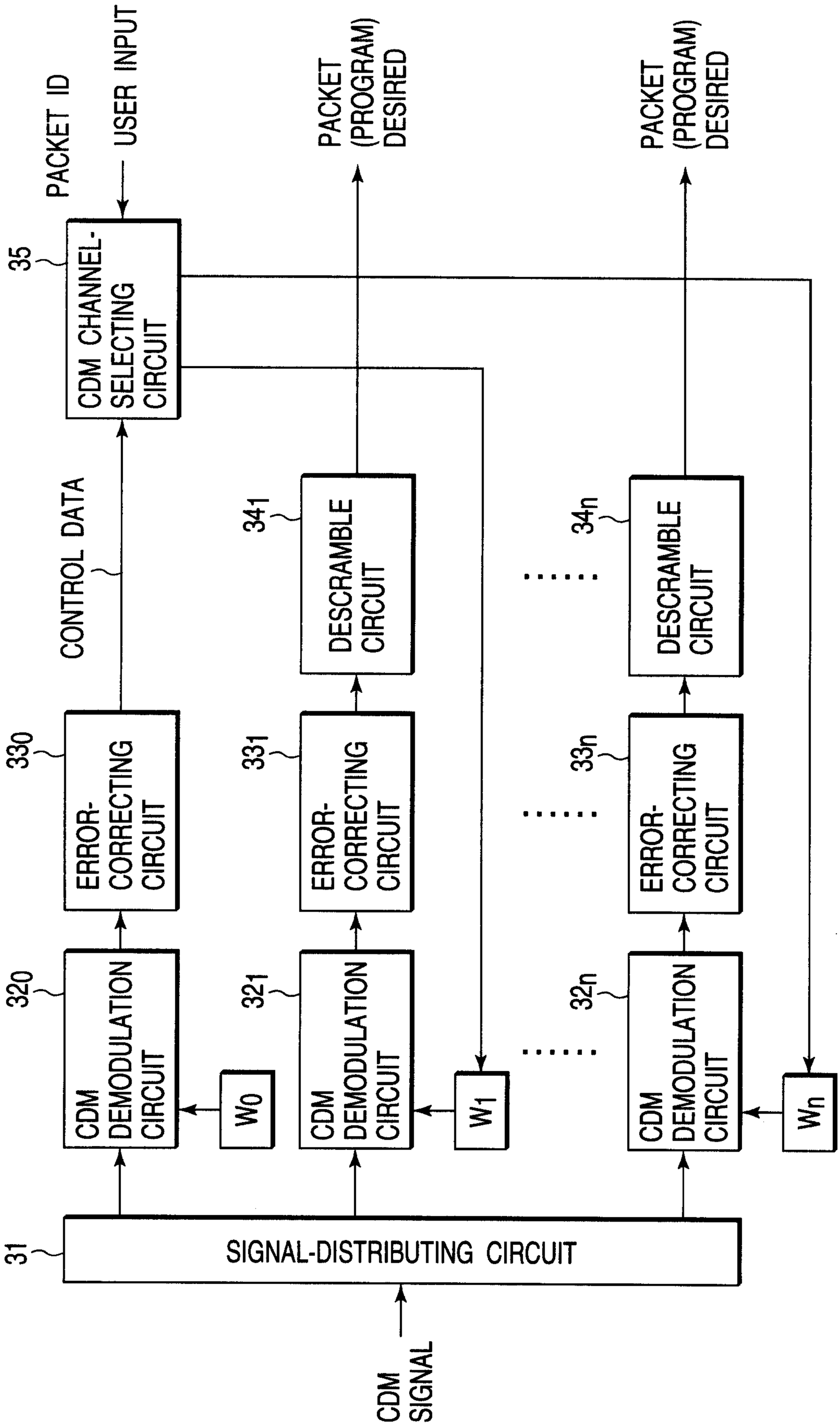
CDM CHANNEL-SELECTING CIRCUIT
35
PACKET ID
USER INPUT
CONTROL DATA
PACKET (PROGRAM) DESIRED
PACKET (PROGRAM) DESIRED
DESCRAMBLE CIRCUIT
341
DESCRAMBLE CIRCUIT
34n
ERROR-CORRECTING CIRCUIT
330
ERROR-CORRECTING CIRCUIT
331
ERROR-CORRECTING CIRCUIT
33n
CDM DEMODULATION CIRCUIT
320
CDM DEMODULATION CIRCUIT
321
CDM DEMODULATION CIRCUIT
32n
W0
W1
Wn
SIGNAL-DISTRIBUTING CIRCUIT
31
CDM SIGNAL

FIG. 10

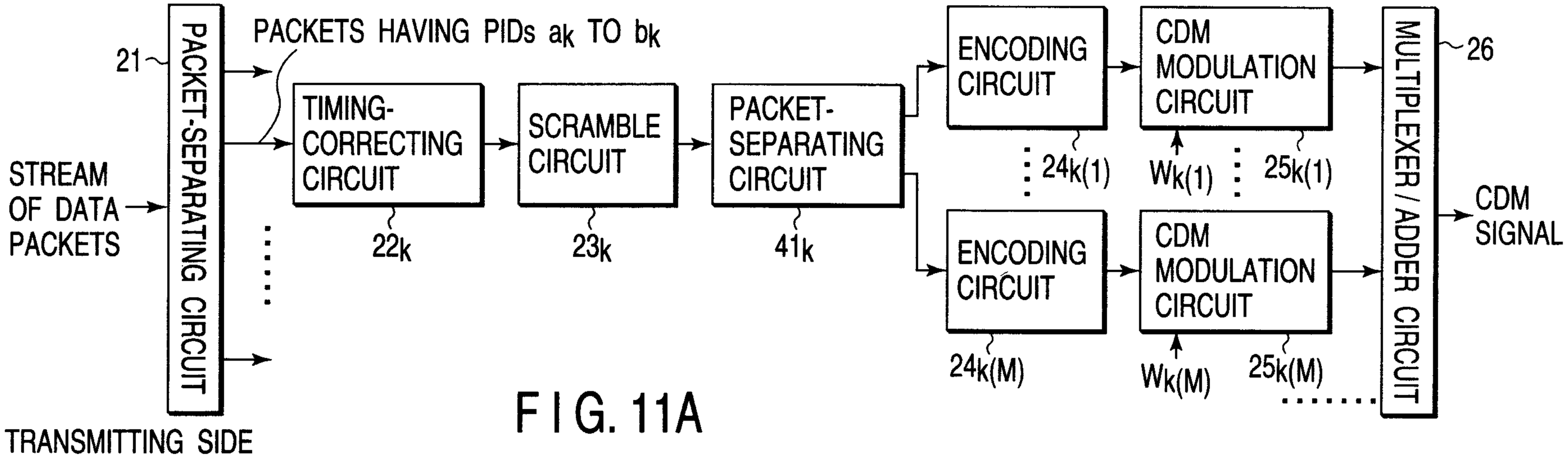

FIG. 11A

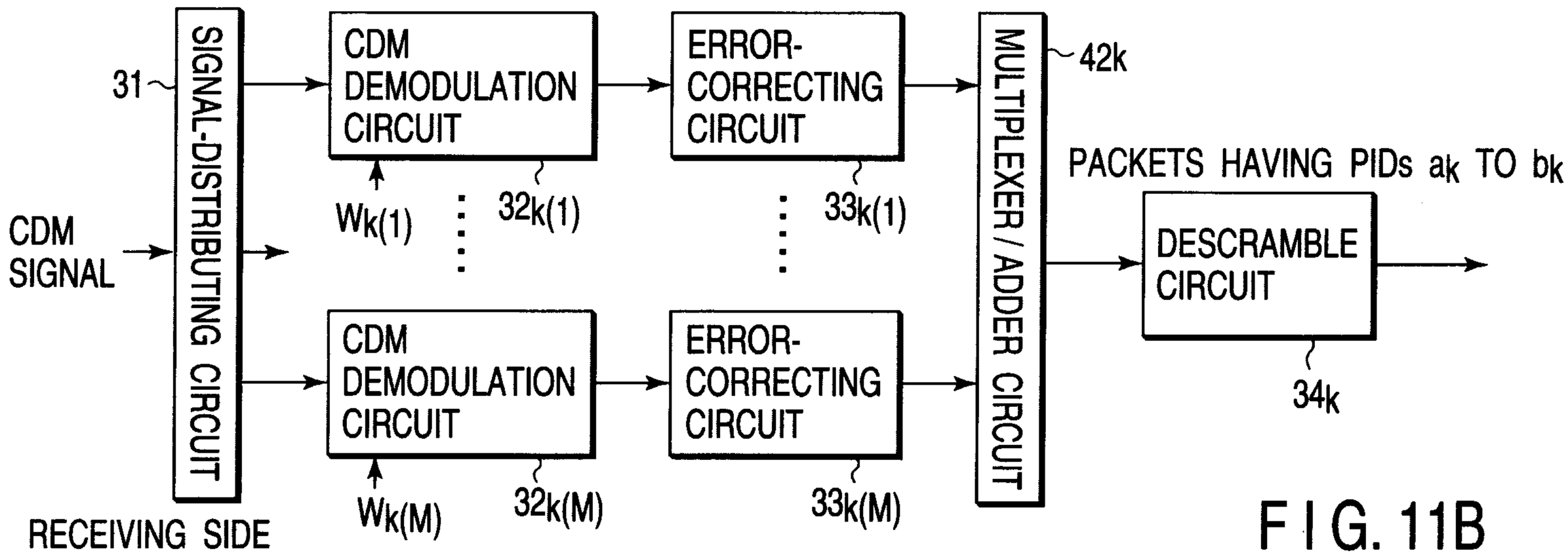

FIG. 11B

CA 02319886 2000-09-18

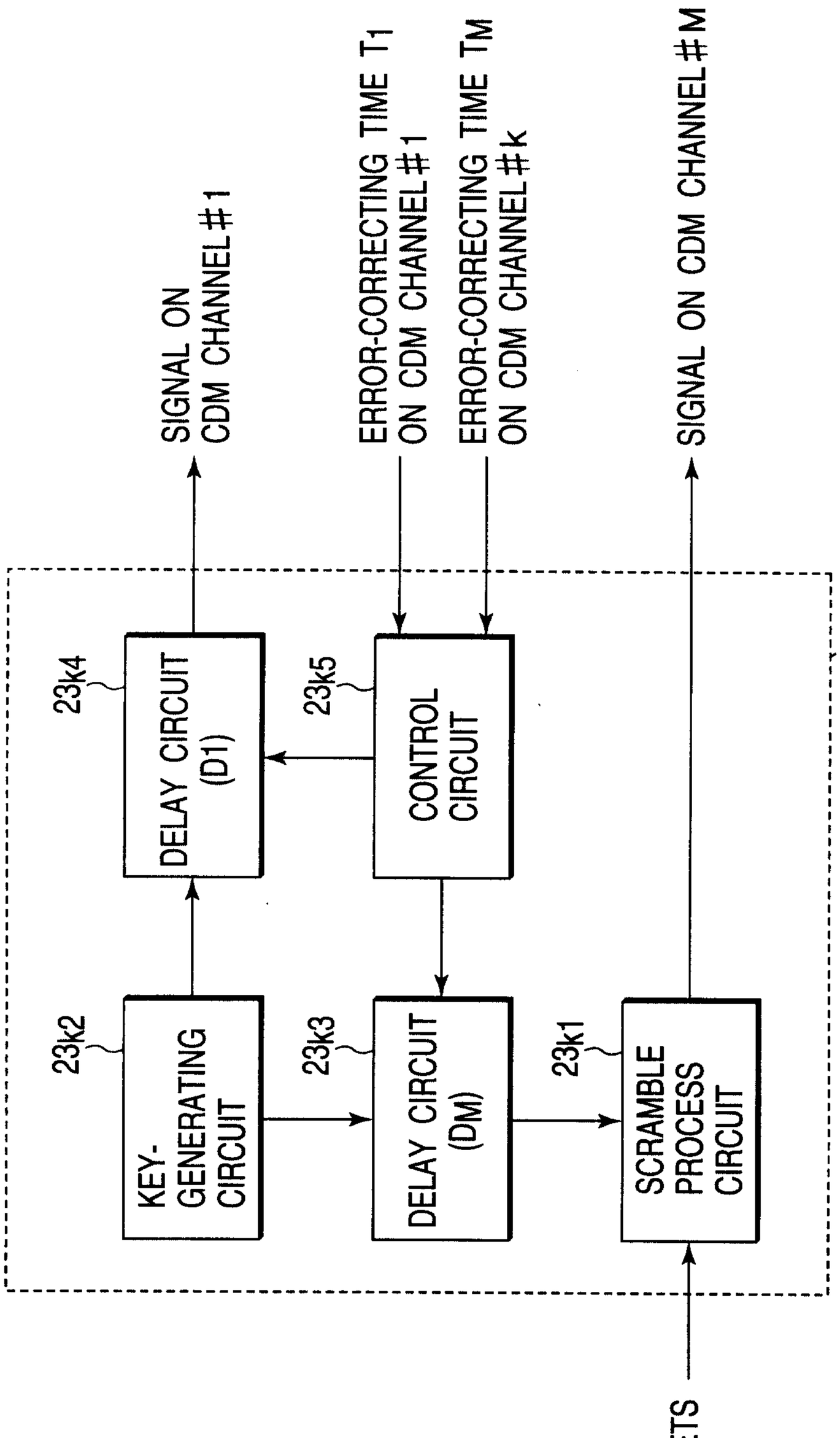
STREAM OF
DATA PACKETS
(PID=ak~bk)
23k
23k4
DELAY CIRCUIT
(D1)
23k5
CONTROL
CIRCUIT
SIGNAL ON
CDM CHANNEL #1
ERROR-CORRECTING TIME T1
ON CDM CHANNEL #1
ERROR-CORRECTING TIME TM
ON CDM CHANNEL #k
SIGNAL ON CDM CHANNEL #M
23k2
KEY-
GENERATING
CIRCUIT
23k3
DELAY CIRCUIT
(DM)
23k1
SCRAMBLE
PROCESS
CIRCUIT

FIG. 12

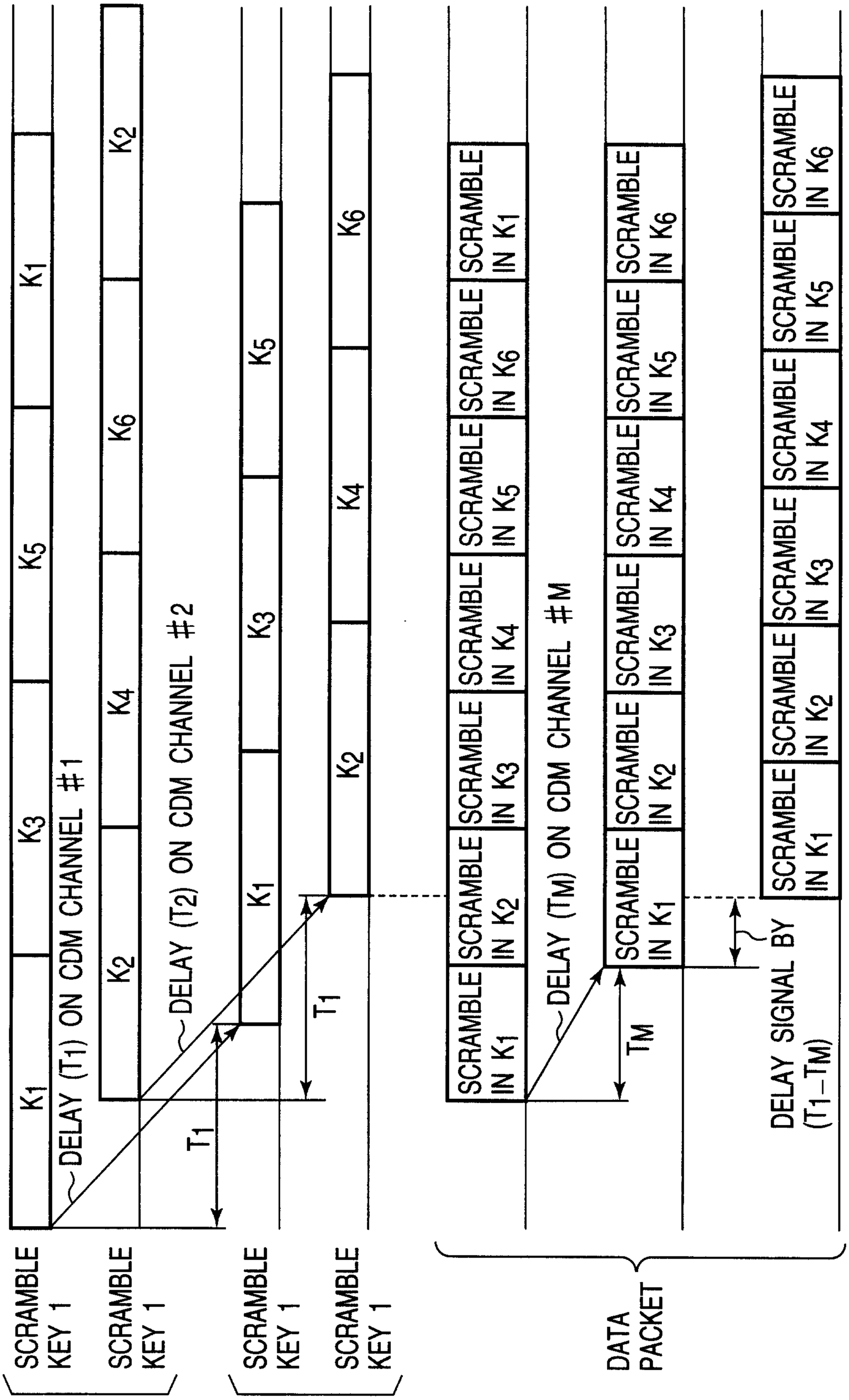
K1
K2
K3
K4
K5
K6
DELAY (T1) ON CDM CHANNEL #1
DELAY (T2) ON CDM CHANNEL #2
DELAY (TM) ON CDM CHANNEL #M
T1
T1
TM
DELAY SIGNAL BY (T1–TM)
SCRAMBLE IN K1
SCRAMBLE IN K2
SCRAMBLE IN K3
SCRAMBLE IN K4
SCRAMBLE IN K5
SCRAMBLE IN K6
SCRAMBLE KEY 1
SCRAMBLE KEY 1
SCRAMBLE KEY 1
SCRAMBLE KEY 1
DATA PACKET

FIG. 13

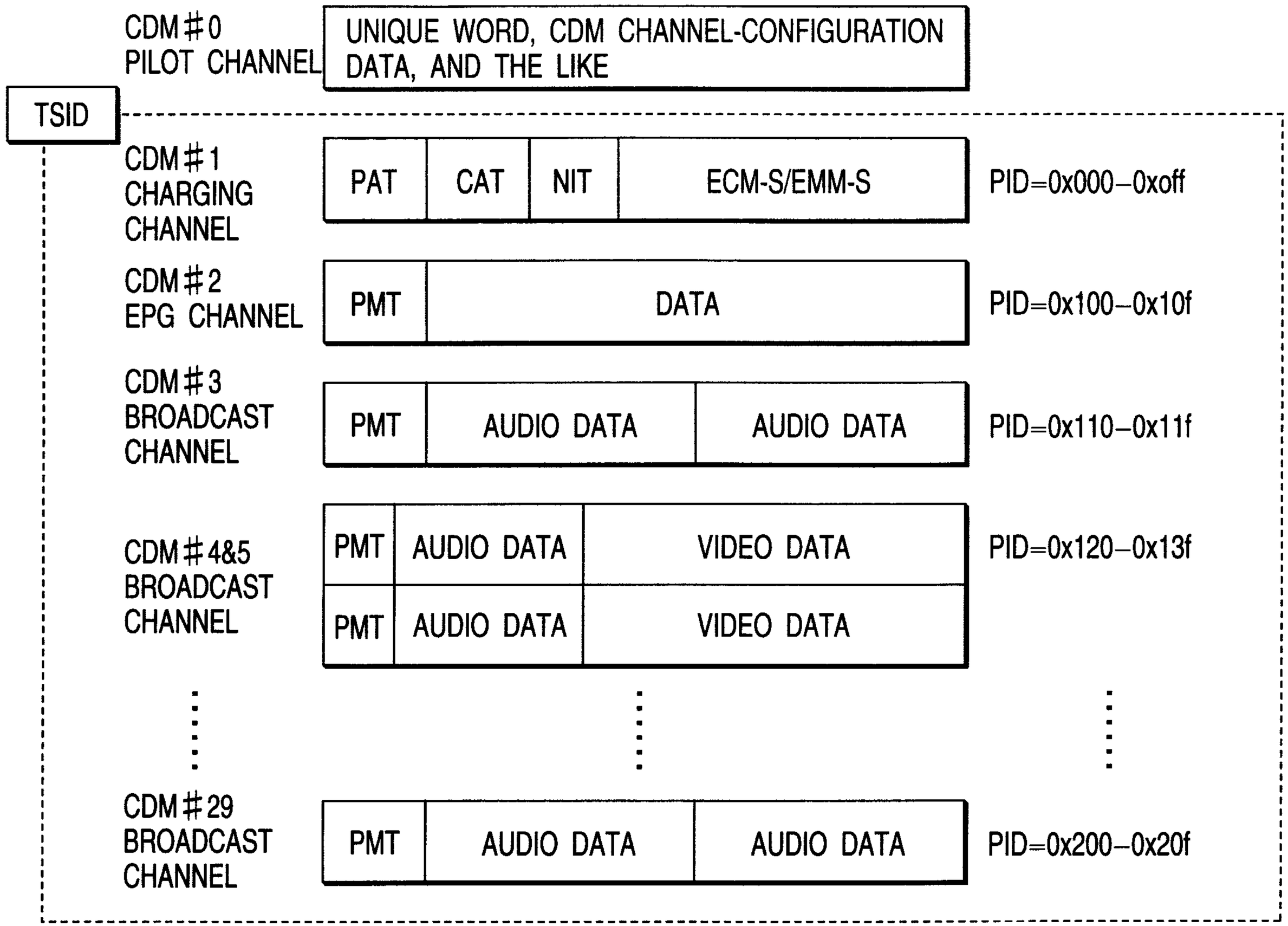

FIG. 14

CA 02319886 2000-09-18

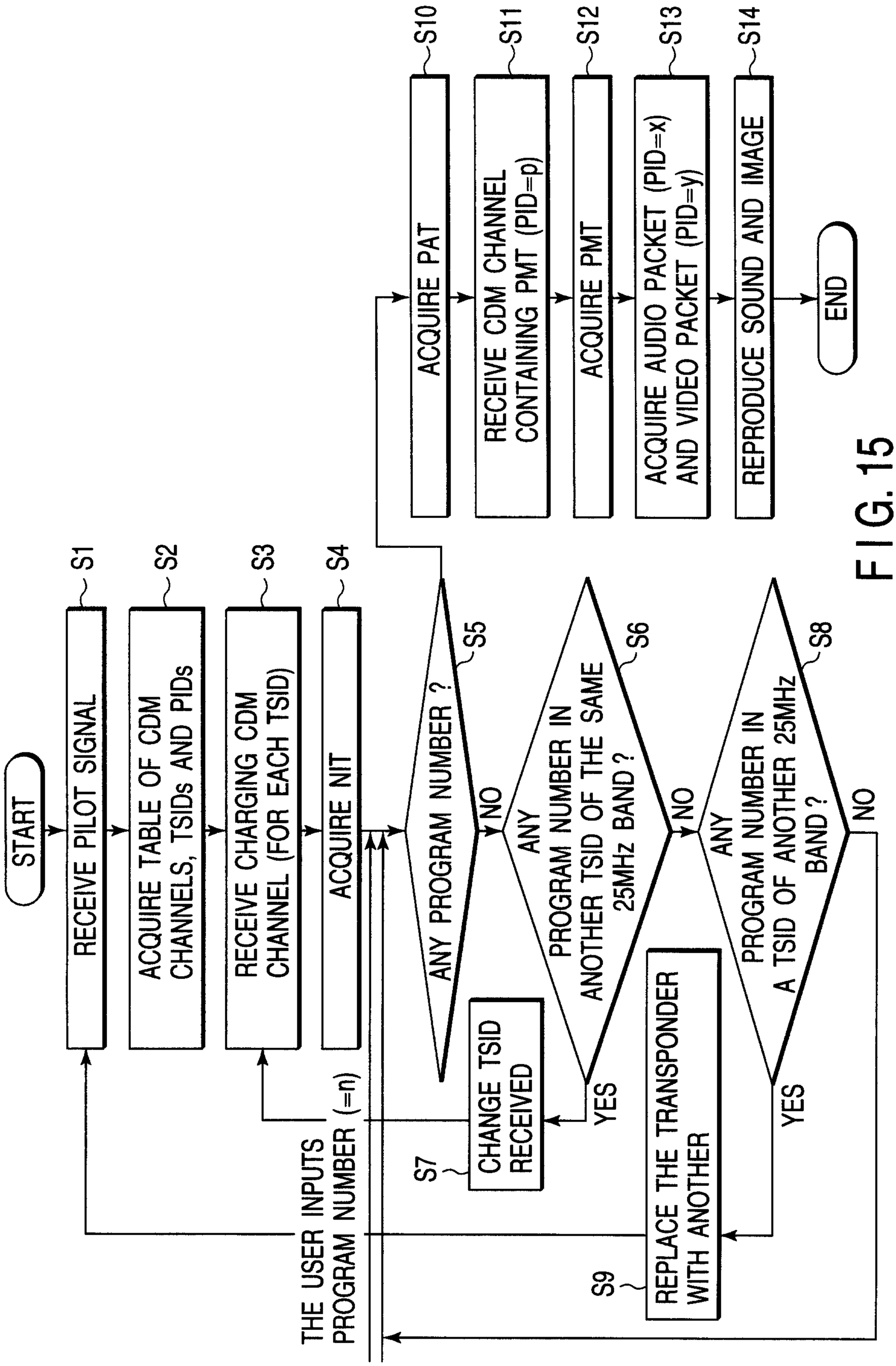
START
RECEIVE PILOT SIGNAL
S1
ACQUIRE TABLE OF CDM CHANNELS, TSIDs AND PIDs
S2
RECEIVE CHARGING CDM CHANNEL (FOR EACH TSID)
S3
ACQUIRE NIT
S4
ANY PROGRAM NUMBER ?
S5
NO
ANY PROGRAM NUMBER IN ANOTHER TSID OF THE SAME 25MHz BAND ?
S6
NO
ANY PROGRAM NUMBER IN A TSID OF ANOTHER 25MHz BAND ?
S8
NO
YES
CHANGE TSID RECEIVED
S7
REPLACE THE TRANSPONDER WITH ANOTHER
S9
YES
THE USER INPUTS PROGRAM NUMBER (=n)
ACQUIRE PAT
S10
RECEIVE CDM CHANNEL CONTAINING PMT (PID=p)
S11
ACQUIRE PMT
S12
ACQUIRE AUDIO PACKET (PID=x) AND VIDEO PACKET (PID=y)
S13
REPRODUCE SOUND AND IMAGE
S14
END

FIG. 15

FIG. 16A

TABLE

CDM#1 TSID-1, PID=0～1f
CDM#2 TSID-2, PID=100～10f
....

FIG. 16B

PAT(0x000)

PMT OF PROGRAM No.1:PID=q
PMT OF PROGRAM No.n:PID=q
....

FIG. 16C

NIT(0x0010)

IN AND TSID OF NETWORK
PROGRAM No.a, PROGRAM No.b,
.....PROGRAM No.z

FIG. 16D

PMT

PROGRAM No.
AUDIO:PID=x
VIDEO:PID=y

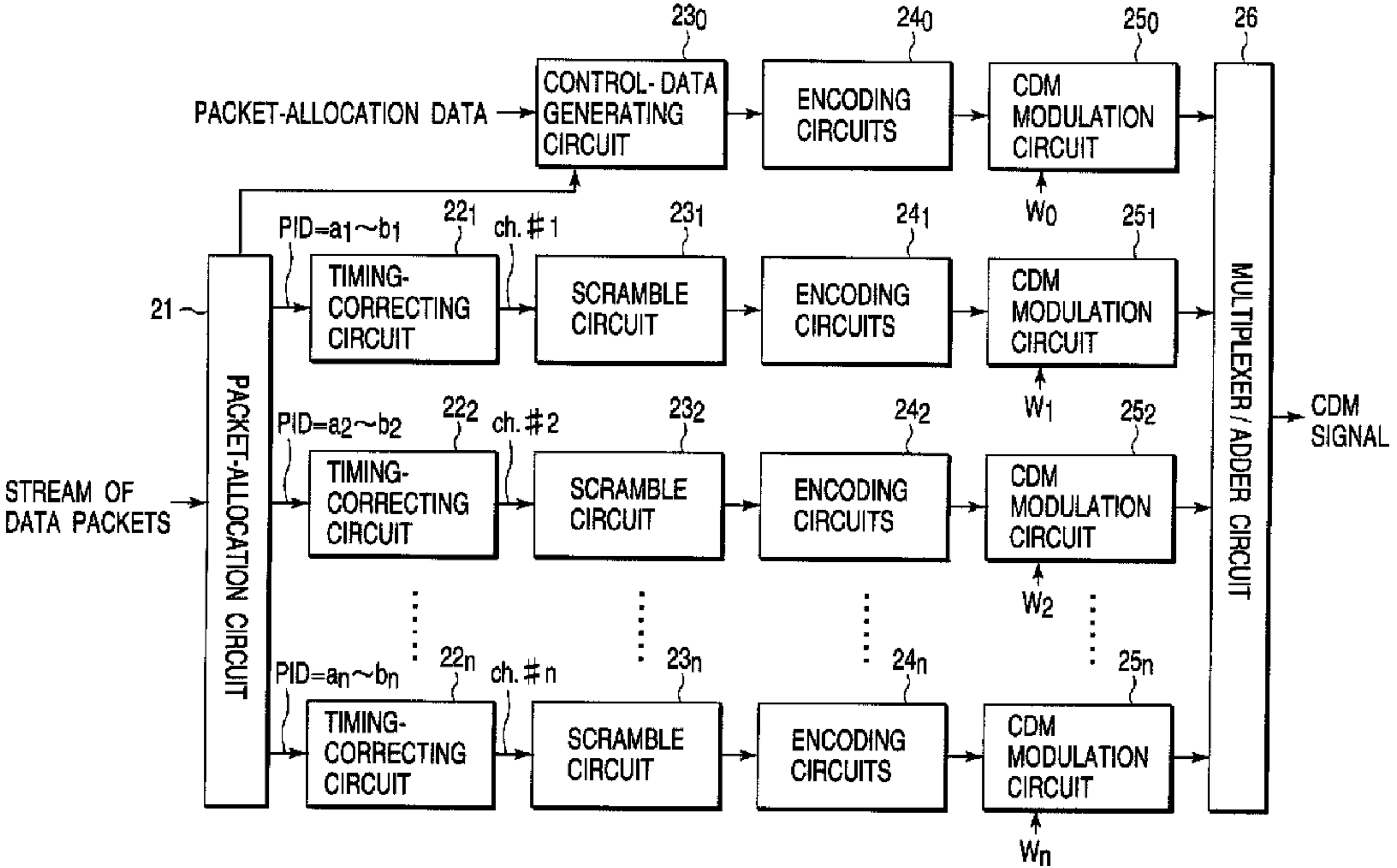
PACKET-ALLOCATION DATA
230
CONTROL- DATA GENERATING CIRCUIT
240
ENCODING CIRCUITS
250
CDM MODULATION CIRCUIT
26
MULTIPLEXER / ADDER CIRCUIT
CDM SIGNAL
W0
21
PACKET-ALLOCATION CIRCUIT
STREAM OF DATA PACKETS
PID=a1~b1
221
ch. # 1
TIMING-CORRECTING CIRCUIT
231
SCRAMBLE CIRCUIT
241
ENCODING CIRCUITS
251
CDM MODULATION CIRCUIT
W1
PID=a2~b2
222
ch. # 2
TIMING-CORRECTING CIRCUIT
232
SCRAMBLE CIRCUIT
242
ENCODING CIRCUITS
252
CDM MODULATION CIRCUIT
W2
PID=an~bn
22n
ch. # n
TIMING-CORRECTING CIRCUIT
23n
SCRAMBLE CIRCUIT
24n
ENCODING CIRCUITS
25n
CDM MODULATION CIRCUIT
Wn