United States Patent [19]

Hillesheimer

[11] **3,877,336**

[45] **Apr. 15, 1975**

[54] **BLANK PUNCHING APPARATUS**

[76] Inventor: **Walter Hillesheimer,** Taunusstrasse 67, D-6078 Neu-Isenburg 1, Germany

[22] Filed: **Oct. 29, 1973**

[21] Appl. No.: **410,698**

[30] **Foreign Application Priority Data**

Nov. 6, 1972 Germany 2254281

[52] **U.S. Cl.** **83/512;** 83/542

[51] **Int. Cl.** **B26f 1/42**

[58] **Field of Search** 83/510, 512, 542, 284

[56] **References Cited**

UNITED STATES PATENTS

511,001	12/1893	Storm et al.	83/510
1,129,876	3/1915	Latham	83/510
2,320,393	6/1943	Randolph	83/512
3,170,353	2/1965	Wheeler et al.	83/512
3,237,499	3/1966	Lohrand et al.	83/510
3,301,110	1/1967	Stegner	83/284 X
3,489,048	1/1970	Sandquist	83/512

Primary Examiner—J. M. Meister

Attorney, Agent, or Firm—Stanley J. Price, Jr.

[57] **ABSTRACT**

A bridge having a central cavity with open end portions includes an elongated lateral opening in the side portion of the bridge for providing lateral access to the central cavity. The bridge is longitudinally movable on the surface of a worktable which supports a punching knife with webs of material or blanks positioned thereon. A plurality of detachably connected cells are transversely positioned within the central cavity. Each of the cells includes a pressure roller and a counter-roller positioned in spaced underlying parallel relationship relative to the pressure roller. A servomotor provided in the bridge is connected to each of the pressure rollers over a chain drive and is operable upon actuation to move the pressure rollers vertically in the central cavity to a preselected height above the counter-rollers. A ring member surrounding the upper portion of the bridge and rotatably supported thereon is positioned in underlying abutting relation with the surface of the pressure rollers. The ring member serves to protect the pressure rollers from the cutting edges of the punching knife as the web of material positioned thereon is introduced through the lateral opening into the space between the pressure and counter-rollers for compression by the pressure rollers to thereby form an impression upon the web of material.

9 Claims, 3 Drawing Figures

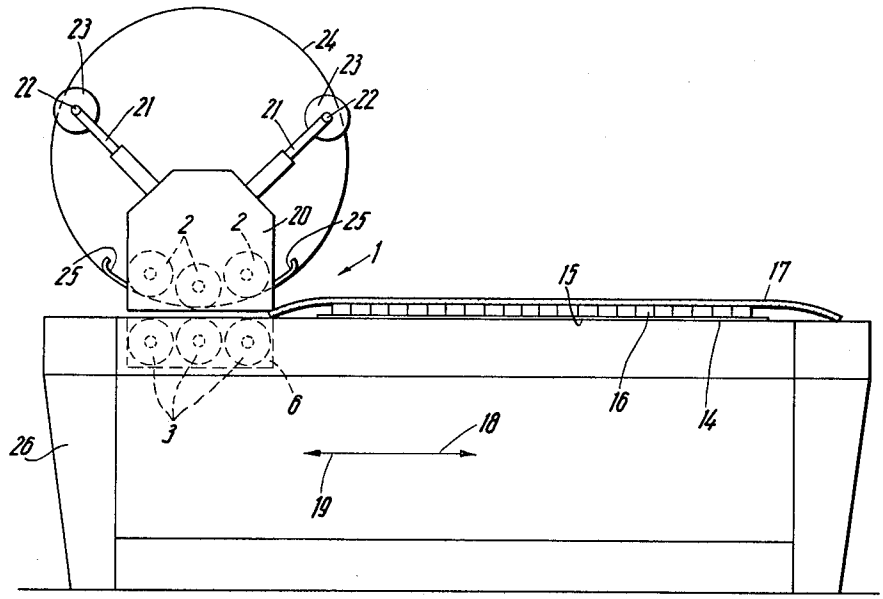

Fig. 1

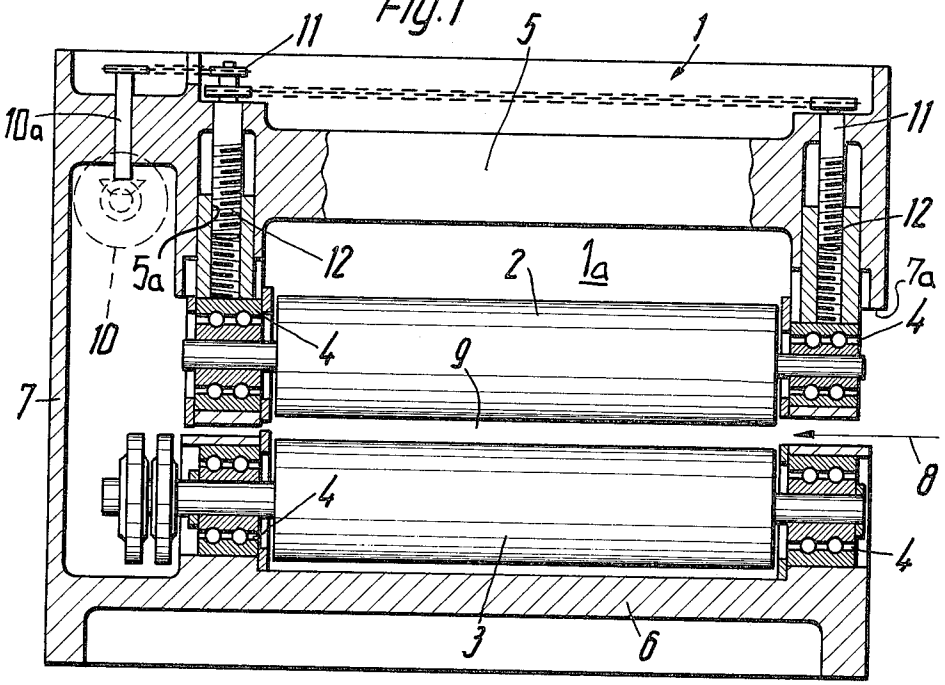
11
5
1
10a
11
12
5a
12
2
1a
7a
10
4
4
9
7
8
4
4
3
6

Fig. 2

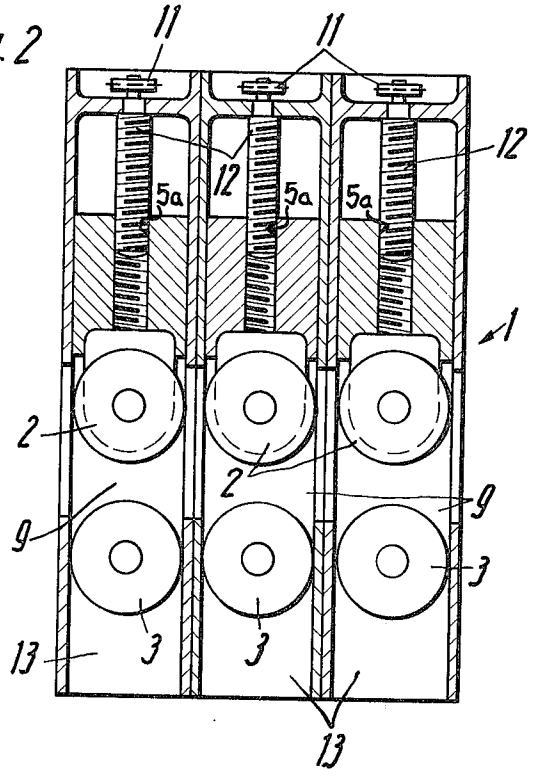
11
11
12
12
5a
5a
5a
1
2
2
9
9
3
13
3
3
13

Fig. 3

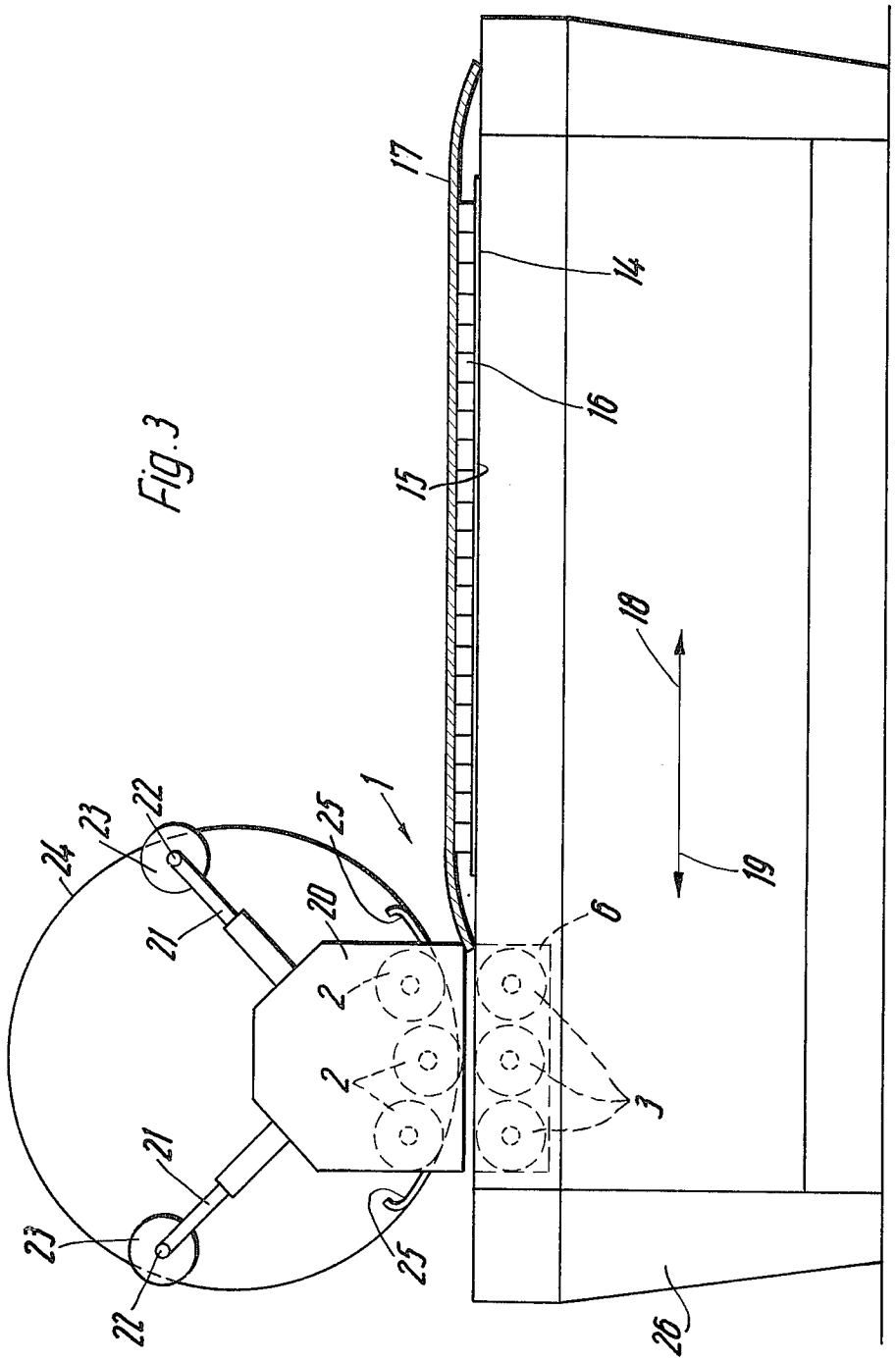

BLANK PUNCHING APPARATUS

BACKGROUND OF THE INVENTION

1. Field of the Invention

This invention relates to a blank punching apparatus and more particularly to a blank punching apparatus that includes a bridge having a lateral opening provided in the side portion thereof to permit introduction of the blank positioned on the punching knife therethrough and into compressive relationship with a pressure roller rotatably mounted within a central cavity of the bridge.

2. Description of the Prior Art

Conventional devices for punching blanks or webs of material with a punching knife include a pressure roller that is supported in a frame mounted to a worktable and brought into compressive relationship with the blanks supported on the punching knife. A desired pattern is impressed on the surface of the blanks corresponding to the cutting pattern of the punching knife. The frame portion is provided with a longitudinal chamber open at the front and rear portions of the frame to permit passage of the blanks on the punching knife through the chamber. The frame may remain stationary relative to the worktable with the blanks and punching knife moved horizontally over the surface of the worktable through the frame. Alternatively, the blanks and punching knife may remain fixed relative to the worktable with the frame moved horizontally over the surface of the worktable to bring the pressure rollers into compressive relationship with the blanks.

There is also disclosed a blank punching apparatus that includes a plurality of pressure rollers horizontally positioned in a bridge that is movable on a worktable. The pressure rollers are rotatably mounted to a horizontal arm of a lever that is arranged for swivelable movement on an axle. Movement of the lever in a desired direction will raise and lower the pressure rollers to a preselected height above the surface of an abutment member which supports the punching knife and blanks to be punched. With this arrangement, the laterally positioned pressure rollers may be used to precompress or prepunch the blanks with the center pressure roller serving as the main punch. Alternatively, the axis of rotation of the pressure rollers may be vertically aligned by the lever so that the rollers simultaneously compress the blanks on the punching knife.

With conventional punching devices of the type described above, the blanks may be of unlimited length; however, the width of the blanks is limited to the width of the openings provided in the end portions of the frame. Increasing the width of the frame to accommodate blanks of greater surface area has been found to be economically undesirable. Furthermore, the increase in the overall size of the punching device necessitated by an increase in the width of the frame makes it more difficult for the operator to maneuver the blanks and punching knife relative to the frame and pressure rollers.

There is need to provide a blank punching apparatus that is capable of accommodating blanks of unlimited surface area yet sufficiently compact to provide efficient operation.

SUMMARY OF THE INVENTION

This invention relates to an apparatus for punching blanks or webs of material with a punching knife that includes a worktable for supporting the blanks on the punching knife in which a bridge member is positioned for longitudinal reciprocal movement on the worktable. The bridge has a central cavity and an elongated lateral opening in the side portion of the bridge for providing access to the central cavity. A pressure roller is rotatably mounted in the central cavity and is arranged transversely relative to the worktable. An adjusting mechanism is provided for vertically positioning the pressure roller in the central cavity relative to the lateral opening so that the blanks are introduced on the punching knife through the lateral opening into compressive relationship with the pressure roller.

In one embodiment of the present invention a plurality of detachably connected cells are arranged within the central cavity of the bridge. Each cell includes a rotatable pressure roller and a counter-roller positioned in spaced overlying parallel relation with the pressure roller. A servo-motor is provided in the bridge having a chain drive operably connected to the pressure roller for vertically adjusting the pressure roller within the central cavity to a preselected height above the counter-roller. With this arrangement, the pressure rollers may be raised and lowered together or independently to a desired vertical distance above the respective counter-rollers to apply varied compressive forces to the blank positioned for punching on the punching knife.

Further, a ring member surrounds the frame of the bridge having one portion of the ring arranged in underlying relationship with the surface of the pressure roller. Guide members positioned laterally of the pressure roller adjacent the lateral opening to the central cavity maintains the ring member in compressive relationship with the blank on the punching knife. As the bridge moves horizontally over the surface of the worktable, the ring member rotates about its axis or about an axis parallel to its axis and together with the guide plates serves to precompress the blank on the punching knife to thereby guide the blank through the lateral opening into the central cavity for further compression by the pressure rollers.

Accordingly, the principal object of this invention is to provide a blank punching apparatus that includes a bridge having a central cavity and a lateral opening in which a blank of unlimited surface area positioned on a punching knife may be introduced through the lateral opening into the central cavity for compression by pressure rollers.

Another object of this invention is to provide a plurality of pressure rollers, rotatably mounted within the bridge of the punching apparatus, which may be adjustably positioned to a preselected height above the counter-rollers, cooperatively arranged with the pressure rollers, to permit punching of a single blank having a desired thickness, punching simultaneously a plurality of blanks or laminating together a plurality of blanks to form a single blank having a desired thickness.

It is a further object of this invention to provide a blank punching apparatus that includes a ring member which surrounds the frame of the apparatus and is movable therewith and serves to protect the pressure roller from the cutting action of the punching knife.

These and other objects and advantages of this invention will be more completely disclosed and described in the following specification, the accompanying drawings and the appended claims.

BRIEF DESCRIPTION OF THE DRAWINGS

FIG. 1 is a sectional view in end elevation of the blank punching apparatus, illustrating a pressure roller and a counter-roller rotatably mounted in spaced overlying parallel relation in the bridge.

FIG. 2 is a sectional view in side elevation of the blank punching apparatus, illustrating the plurality of detachably connected cells provided in the bridge, each having a pressure roller positioned at a preselected vertical height above a counter-roller.

FIG. 3 is a diagrammatic representation of the blank punching apparatus, illustrating the arrangement of the pressure and counter-rollers in the bridge that is longitudinally movable over the surface of the worktable which supports the blank positioned on the punching knife.

DESCRIPTION OF THE PREFERRED EMBODIMENTS

Referring to the drawings, and particularly FIGS. 1 and 2, there is illustrated a blank punching apparatus that includes a bridge generally designated by the numeral 1 being longitudinally movable in a conventional manner, such as on rails, over the horizontal surface of a worktable (not shown). The bridge 1 is provided with a central cavity 1*a* defined by the upper and lower bridge portions 5 and 6 and the closed side bridge portion 7. A pressure roller 2 is rotatably mounted within the central cavity 1*a* by the bearing assemblies 4 which are secured to the bridge 1. Positioned in spaced parallel relationship below the pressure roller 2 is a counter-roller 3, also rotatably mounted by bearing assemblies 4 to the bridge 1 within the cavity 1*a*.

The side portion of the bridge 1 positioned oppositely of the closed side portion 7 is provided with a lateral access opening 7*a* through which blanks may be introduced in the direction of arrow 8 into the cavity 1*a* and between the gap 9 provided between the pressure roller 2 and the counter-roller 3. The gap 9 is aligned with the lateral opening 7*a* and the open end portions of the bridge 1 to thereby permit insertion of blanks or webs of material supported on a punching knife or the like through the lateral opening 7*a* and the bridge open end portions into the gap 9 for compression by the pressure roller 2. The height of the gap 9 may be increased or decreased by raising or lowering the pressure roller 2 within the cavity 1*a* relative to the counter-roller 3 and the lateral opening 7*a* to permit introduction of blanks of varying thickness or a plurality of stacked individual blanks into compressive relationship with the pressure roller 2 and the counter-roller 3.

A suitable motor, such as the servo-motor 10 diagrammatically illustrated in FIG. 1, is provided in the bridge adjacent the side portion 7 and includes a drive shaft 10*a* extending upwardly therefrom. A drive means such as the chain drive 11 is connected to the drive shaft 10*a* and extends laterally across the upper bridge portion 5 for connection with the transmission rods 12 connected to the bearing assemblies 4 of the pressure roller 2. The transmission rods 12 are threadedly engaged within the threaded bores 5*a* of the upper body portion 5.

Rotation of the drive shaft 10*a* is transmitted to the transmission rods 12 through the chain drive 11 to raise and lower the pressure roller 2 within cavity 1*a* to thereby vary the height of the gap 9 between the pressure roller 2 and the counter-roller 3. Thus, blanks or webs of material of a selected thickness may be introduced on a punching knife through the lateral opening 7*a* into the gap 9 for compressive engagement with the pressure roller 2. Also, a suitable locking device (not shown) may be provided to close the lateral opening 7*a* when blanks, having widths not extending the width of the open end portions of the bridge, are to be stamped.

As illustrated in FIG. 2, the bridge 1 may be provided with a plurality of individual cells 13 detachably connected to each other by suitable connecting means, such as bolts. Each cell includes a pressure roller 2 spaced in overlying parallel relationship with a counter-roller 3 having the gap 9 provided therebetween. Each combination of pressure and counter-rollers within the cells 13 may be provided with motors 10 and chain drives 11 connected to transmission rods 12 for raising and lowering the pressure rollers 2 independently of each other to a preselected height above the counter rollers 3. On the other hand, a single motor and a common chain drive 11 may be provided for all of the cells 13 to thereby maintain the pressure rollers 2 at a desired height above the counter-rollers 3.

With the above described arrangement of cells 13, varying degrees of compression may be applied by the pressure rollers 2 upon the blanks introduced through the lateral opening 7*a* into the gap 9 as determined by the vertical positioning of the pressure rollers 2 relative to the counter-rollers 3. The counter-rollers 3 are rigidly mounted in the bridge 1 and an equivalent structure may be provided by eliminating the counter-rollers 3 and providing a worktable having its top surface maintained at the elevation of the counter-rollers 3. By lowering the laterally positioned pressure rollers relative to the center pressure roller, the blanks may be precompressed and prestressed on the surface of the punching knife as they are fed through the gap 9.

In the preferred practice of this invention either the pressure rollers 2 or the counter-rollers 3 are driven so that the bridge 1 is moved horizontally on the worktable as the blank passes into frictional engagement with the respective driven roller. As the blank passes between the pressure rollers 2 and the counter-rollers 3 and the blank is compressed by the pressure rollers 3 moving over the punching knife, the bridge moves across the worktable. At the termination of the punching operation, however, the frictional engagement between the pressure rollers 2 and the blank is broken and movement of the bridge on the worktable interrupted. If desired, the bridge may be moved in the opposite direction on the worktable by feeding the blank between the pressure rollers 2 and the counter-rollers 3 in the opposite direction bringing the bridge 1 to its initial starting position on the worktable.

Further, the above described arrangement of pressure rollers 2 and counter-rollers 3 placed in spaced overlying parallel relationship within the bridge 1 may be used for laminating, coating, glueing and other similar operations of blanks or webs of material by the compressive relationship of the material between the pressure rollers 2 and the counter-rollers 3 and eliminating use of the punching knife. The pressure rollers 2, accordingly, may be profiled to reproduce a desired pattern upon the blank corresponding to the profile design of the roller. In addition, for the punching of specific plastic materials, the rollers 2 may be heated to an ele-

vated temperature for improving the impression formed on the plastic material.

Referring to FIG. 3, there is diagrammatically illustrated another embodiment of the present invention in which the bridge 1 is supported for longitudinal movement upon the horizontal surface of a worktable 14 having a knife punch support base 15 for maintaining the punching knife 16 rigidly thereon. A blank or any other material suitable for punching is positioned on the surface of the cutting edges of the knife. The blank 17 and the punching knife 16 may be of any suitable length depending upon the capacity of the worktable 14. As illustrated in this embodiment, the pressure rollers 2 are adjustably positioned at varied elevations above the counter-rollers 3 which have top surfaces maintained in the same plane. Preferably, the middle pressure roller is set lower relative to the counter-rollers than the two lateral pressure rollers. The bridge 1 is then capable of being moved upon the surface of the worktable 14 in the direction indicated by the arrows 18 and 19. The drive for the bridge 1 may be effected either by a motor operably associated with the bridge 1 supported on the frame 26, or by a motor operably associated with the middle pressure roller 2 or all the pressure rollers.

A pair of telescopic adjustable rods 21 project outwardly from the front end portion and the rear end portion of the bridge frame 20. At the end of the rods 21 are provided support shafts 22 that extend laterally outwardly from the rods. Discs 23 are axially mounted on the ends of the shafts 22 and have a diameter greater than the diameter of the support shafts 22. A ring 24 fabricated from a relatively rigid synthetic material, such as plastic, is positioned over the support shafts 22 and surrounds the bridge frame 20. The lower portion of the ring 24 is maintained in abutting contact with the surface of the pressure rollers 2 above the counter-rollers 3 and thereby serves to protect the pressure rollers 2 from the abrasive cutting action of the knife blades as the blank 17 passes between the pressure rollers 2 and the counter-rollers 3.

Guide plates 25 are provided laterally of the pressure rollers 2 at the side portions of the bridge 1. The ring member 24 is arranged to pass over the surface of the guide plates 25 and the top surface of the blank 17 to be punched. With this arrangement, the guide plates 25 serve to guide the ring 24 over the surface of the pressure rollers 2 and additionally to prevent the operator from reaching in the gap 9 between the pressure and counter-rollers.

To position the ring 24 over the bridge frame 20 and in contact with the pressure rollers 2, the rods 21 are retracted to permit placement of the ring member 24 over the bridge. Then once the ring 24 has been positioned in abutting contact with the pressure rollers 2 and the guide plates 25, the rods 21 are extended outwardly from the frame 20 until the ring 24 is loosely supported by the shafts 22.

The adjustable rods 21 are fixedly secured to extend outwardly from the bridge frame 20 so that the ring 24 remains rotatable on the shafts 22 but is restrained from moving axially thereon. As the blank 17 and the punching knife 16 on the support base 15 enter the gap 9, the ring 24 abutting the driven pressure rollers 2 is urged into frictional engagement with the blank 17. Thus, the ring 24 is rotated as the bridge 1 moves in the direction 18 or 19 on the surface of the worktable 14. With this arrangement, the ring 24 moves with the bridge 1, eliminating the need for positioning and removing a backing plate beneath the pressure rollers 2 before and after the punching operation.

According to the provisions of the patent statutes, I have explained the principle, preferred construction and mode of operation of my invention and have illustrated and described what I now consider to represent its best embodiments. However, I desire it to be understood that, within the scope of the appended claims, the invention may be practiced otherwise than as specifically illustrated and described.

I claim:

1. Apparatus for punching blanks with a punching knife comprising,
- support means for supporting said blanks on said punching knife,
- a bridge member positioned for longitudinal reciprocal movement on said support means,
- said bridge having a central cavity and an elongated lateral opening in the side portion of said bridge for providing access to said central cavity,
- a pressure roller rotatably mounted in said central cavity and arranged transversely relative to said support means,
- a counter roller rotatably mounted in said central cavity and positioned transversely relative to said support means in spaced underlying relation with said pressure roller, and
- means for vertically adjusting the position of said pressure roller in said central cavity relative to said lateral opening to permit introduction of said blanks on said punching knife through said lateral opening into compressive relationship with said pressure roller.

2. Apparatus as set forth in claim 1 which includes,
- a plurality of pressure rollers rotatably mounted in said central cavity and arranged transversely relative to said support means, and
- means for independently vertically adjusting the position of said pressure rollers in said central cavity relative to said lateral opening to permit introduction of said blanks on said punching knife through said lateral opening into compressive relationship with said pressure rollers.

3. Apparatus as set forth in claim 2 which includes,
- a plurality of counter-rollers rotatably mounted in said central cavity and positioned transversely relative to said support means in spaced underlying relation with said respective pressure rollers, and
- said counter-rollers arranged to support said punching knife as said blanks are brought into compressive relationship with said pressure rollers.

4. Apparatus as set forth in claim 1 which includes,
- a plurality of detachably connected cells provided in said central cavity and arranged transversely relative to said support means,
- each of said cells having a pressure roller and a counter-roller positioned in spaced, underlying parallel relationship with said pressure roller, and,
- means operably connected with said pressure roller in each of said cells for independently raising and lowering said pressure roller relative to said counter-roller.

5. Apparatus as set forth in claim 1 in which said adjusting means includes,

a motor having a rotatable drive shaft extending therefrom,

threaded means connected at one end portion to said pressure roller for vertically moving said pressure roller in said bridge, and

drive means for connecting said drive shaft to the other end portion of said threaded means and for transmitting rotation of said drive shaft to said threaded means to thereby raise and lower said pressure roller in said bridge.

6. Apparatus as set forth in claim **1** which includes, means rotatably supported on said bridge for protecting said pressure roller from the abrasive cutting action of said punching knife.

7. Apparatus as set forth in claim **6** in which said protecting means includes,

a pair of telescopically adjustable rod members extending outwardly from said bridge,

a support shaft connected to the end portion of each of said adjustable rod members and projecting laterally therefrom, and

a ring member rotatably supported on said support shafts and having a portion thereof positioned in abutting relationship with said pressure roller.

8. Apparatus as set forth in claim **7** which includes, said ring member fabricated of a rigid synthetic material.

9. Apparatus as set forth in claim **7** which includes, guide means positioned laterally of said bridge for maintaining said ring member in abutting relationship with said pressure roller.

* * * * *