Oct. 19, 1954 E. C. NELSON 2,691,974

AUTOMATIC ARROW HOLDER

Filed May 20, 1952 2 Sheets-Sheet 1

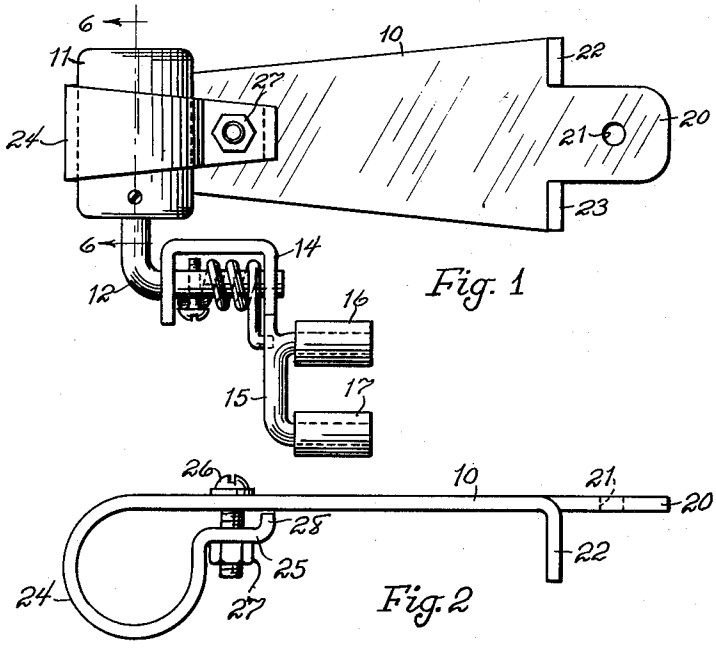

Fig. 1

Fig. 2

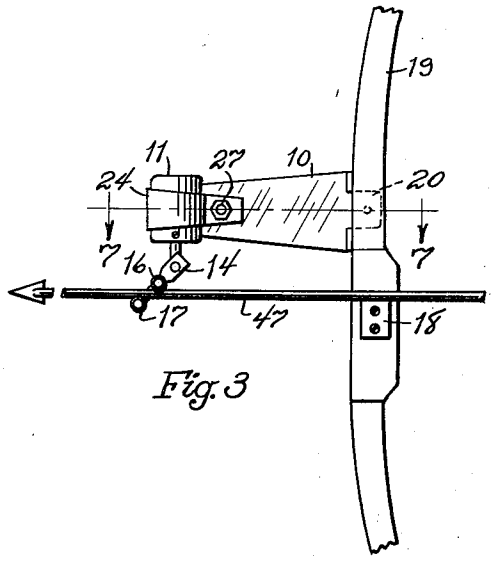

Fig. 3

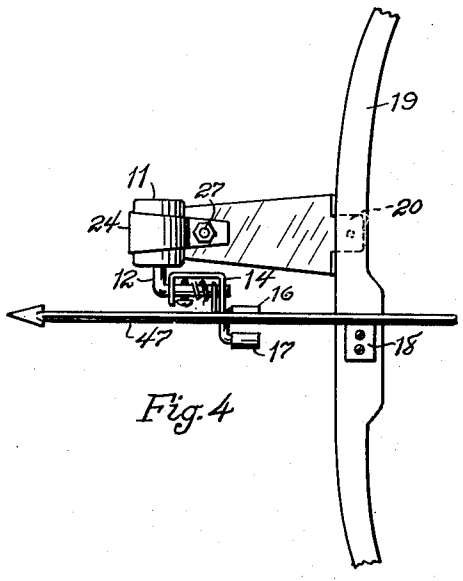

Fig. 4

INVENTOR.
Erlo C. Nelson

BY Victor J. Evans & Co.

ATTORNEYS

Oct. 19, 1954 E. C. NELSON 2,691,974

AUTOMATIC ARROW HOLDER

Filed May 20, 1952 2 Sheets-Sheet 2

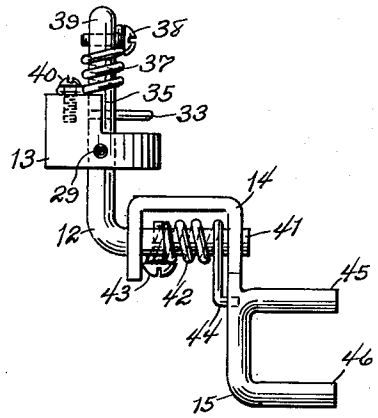

Fig. 5

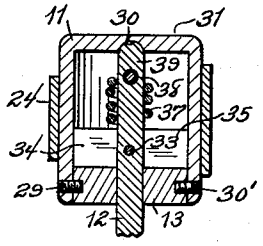

Fig. 6

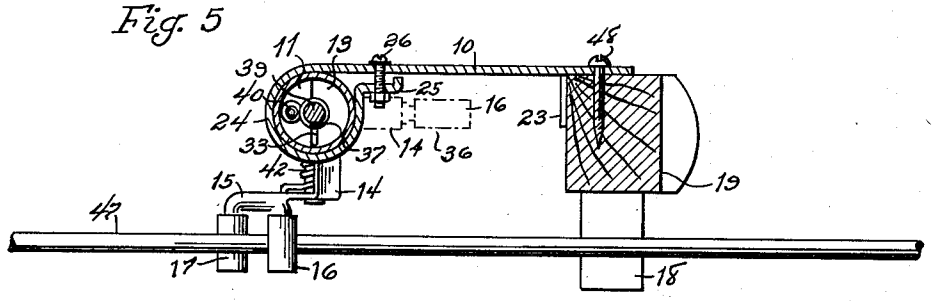

Fig. 7

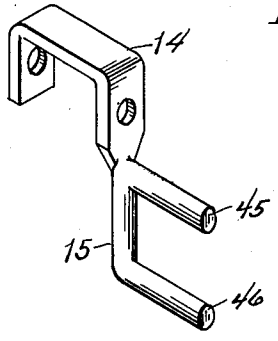

Fig. 8

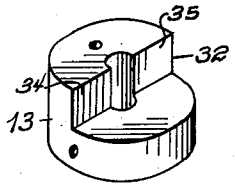

Fig. 9

INVENTOR.
Erlo C. Nelson

BY Victor J. Evans & Co.

ATTORNEYS

Patented Oct. 19, 1954

2,691,974

UNITED STATES PATENT OFFICE

2,691,974

AUTOMATIC ARROW HOLDER

Erlo C. Nelson, Milton, Wis.

Application May 20, 1952, Serial No. 288,783

4 Claims. (Cl. 124—41)

1

This invention relates to archery and in particular an attachment for a bow for retaining an arrow in the shooting position on a bow.

The purpose of this invention is to provide means for retaining an arrow in position continuously on a bow, as a bow is carried under an arm or positioned on the ground.

With this thought in mind this invention contemplates an arrow holder including a bracket adapted to be attached to a bow with a pair of rollers resiliently mounted on an arm pivotally mounted in the outer end of the bracket and positioned whereby an arrow extended across the side of the bow passes between the rollers.

The object of this invention is, therefore, to provide means for mounting a pair of spaced rollers on a bracket extended from a bow whereby the rollers are in the path of an arrow positioned to be projected by the bow and automatically release the arrow as the arrow leaves the bow.

Another object of the invention is to provide an attachment for supporting arrows on a bow that may readily be mounted on bows of the conventional type.

A further object of the invention is to provide an arrow positioning and retaining device for a bow in which the device is of a simple and economical construction.

With these and other objects and advantages in view the invention embodies a bracket having a mounting base for attaching the bracket to a bow and having a cylindrical casing secured in the outer end thereof, an L-shaped arm pivotally mounted in the casing and having a spring for urging an extended end of the arm to a position parallel to the bracket, a support having spaced rollers thereon carried by the extended end of the arm and resiliently urged in an outwardly extended position by a spring, and an angle clip providing a rest adapted to be positioned on one side of the bow.

Other features and advantages of the invention will appear from the following description taken in connection with the drawing, wherein:

Figure 1 is a side elevational view illustrating the bracket.

Figure 2 is a plan view of the bracket with parts removed.

Figure 3 is an elevational view, similar to that shown in Fig. 1 with the parts shown on a reduced scale and illustrating the arrow holding attachment of this invention with the bracket and rest supported on a bow, and showing spaced rollers of the bracket in the position of supporting an extended end of an arrow.

2

Figure 4 is a view similar to that shown in Fig. 3 with the rollers turned to an angle of 90° whereby the arrow is free, and supported only on the rest on the side of the bow.

Figure 5 is a detail showing an end elevational view of the roller mounting and actuating elements.

Figure 6 is a view showing a vertical section through the tubular casing on the outer end of the bracket, being taken on line 6—6 of Fig. 1.

Figure 7 is a sectional plan taken on line 7—7 of Fig. 3 illustrating the positions of the parts with the attachment supporting the arrow in the shooting position.

Figure 8 is a perspective view illustrating the roller carrying lever with other parts omitted.

Figure 9 is a perspective view showing the anchoring hub for supporting the L-shape arm of the bracket in the cylindrical casing.

Referring now to the drawing wherein like reference characters denote corresponding parts the arrow holding attachment of this invention includes a bracket 10, a cylindrical casing 11 carried by the outer end of the bracket, an arm 12 journaled in a hub 13 secured in the lower end of the casing 11, a U-shape lever 14 having a yoke 15 on which rollers 16 and 17 are mounted carried by the lower end, and a clip angle 18 that is positioned on one side of a bow as indicated by the numeral 19, for supporting the arrow, with the outer end thereof extended between the rollers 16 and 17.

The bracket 10 is shown in detail in Fig. 2 whereby a tongue 20 with an opening 21 therein extends from the large end and fingers 22 and 23, which are positioned perpendicularly to the bracket extend from points above and below the tongue. The outer end of the bracket is provided with a circular clamp 24 in which the casing 11 is positioned and a flange 25 of the clamp is positioned to receive a bolt 26 whereby a nut 27 on an extended end thereof forces the clamp around the casing 11 whereby the casing is secured in the outer end of the bracket. The flange 25 may be provided with a spacing lip 28 to limit the closing movement thereof.

The cylindrical casing 11 is made as illustrated in Fig. 6 wherein the hub 13 is secured by screws 29 and 30' in the lower end to provide a closure and the vertical stem of the arm 12 is journaled in the hub, with the upper end thereof extended into a recess 30 in the upper end 31 of the casing. The hub is provided with a recess 32 and a pin 33, extended through the stem of the arm 12, is positioned to engage the surfaces 34 and 35 of the hub to limit the turning movement of the

arm 12 on the lower end of which the rollers 16 and 17 are carried.

The arm 12 is urged toward the position indicated by the dotted lines 36, in Fig. 7, by a spring 37, one end of which is attached by a screw 38 to the stem 39 of the arm, and the other to the upper surface of the hub 13, to which it is attached by a screw 40. The pin 33 permits the arm 12 to travel to an angle of 180°.

The lower end of the arm 12 is provided with a horizontally disposed section 41 on which the inverted U-shape lever 14 is positioned and a spring 42, positioned on the said section 41 urges the lower end of the lever, on which the yoke 15 is positioned, outwardly as illustrated in Fig. 3. One end of the spring is secured by a screw 43 to the section 41 of the arm and the opposite end of the spring is provided with an extended section 44 that bears against one side of the yoke. The yoke is provided with stub shafts 45 and 46 on which the rollers 16 and 17 are journaled and with the rollers resiliently mounted, in this manner, the yoke may be held in an outwardly extended position, by an arrow, as indicated by the numeral 47, extended across the clip 18 and between the rollers.

With the parts arranged in this manner the bracket 10 is positioned against the outer surface of a bow as indicated by the numeral 19, and the bracket is secured in position with a screw 48 extended through the opening in the tongue 20, as shown in Fig. 7. The bow may be used in the usual manner as the spring 37 urges the section 41 of the arm 12 with the lever 14 and rollers 16 and 17 around to the position wherein the rollers are indicated by the dotted lines 36, in Fig. 7, so that the attachment is out of the way of an arrow, and when it is desired to use the device the yoke is moved around to the position shown in Figs. 3 and 7 whereby the arrow extends between the rollers 16 and 17, the arrow being supported by the rollers and rest 18. With the parts in this position the notch in the end of the arrow is placed over the cord of the bow and the arrow may be projected in the usual manner. The attachment may or may not be used as may be desired.

It will be understood that modifications within the scope of the appended claims may be made in the design and arrangement of the parts without departing from the spirit of the invention.

What is claimed is:

1. An arrow holder comprising a bracket adapted to be mounted on a bow with one end extended forwardly from the bow, an arm pivotally mounted in the extended end of the bracket, a pair of rollers positioned in parallel relation rotatably mounted on said arm, means for mounting the bracket on a bow with the rollers positioned whereby an arrow in a shooting position on one side of the bow extends between said rollers, and means resiliently urging said arm to swing to a position disengaging the rollers from the arrow.

2. An arrow holder comprising a bracket, said bracket having means on one end adapted to attach the bracket to a bow, and having a clamp on the opposite end, a cylindrical casing mounted in the clamp on said opposite end of the bracket,

an L-shaped arm having a vertical and a horizontally disposed section positioned with the vertically disposed section rotatably mounted in the cylindrical casing and the horizontally disposed section extended laterally therefrom, resilient means in the casing urging the arm to such a position that the horizontally disposed section thereof is parallel to the bracket, a lever having a yoke on an extended end thereof pivotally mounted on the horizontally disposed section of said arm, resilient means for urging the yoke to an upwardly extended position, and rollers journaled on said yoke whereby an arrow in a shooting position extends between said rollers.

3. In an arrow holder, the combination which comprises an elongated plate having mounting means at one end and a vertically disposed casing carried by the outer end providing a bracket, an L-shape arm having a vertically disposed section and a horizontally disposed section, said arm being positioned with the vertically disposed section rotatably mounted in the casing, a spring in the casing and connected to the arm and casing whereby the spring rotates the arm so that the horizontally disposed section thereof extends in a plane parallel to that of the bracket, an inverted U-shape lever pivotally mounted on the horizontally disposed section of the arm, a spring on the horizontally disposed section of the arm with one end connected to the arm and the other positioned against a surface of the lever for urging an extended end of the lever upwardly, a yoke having spaced parallel shafts extended therefrom carried by the lever, and rollers journaled on the shafts of the yoke whereby an arrow in a shooting position extends between said rollers.

4. In an arrow holder, the combination which comprises an elongated plate having mounting means at one end and a vertically disposed casing carried by the outer end providing a bracket, an L-shape arm having a vertically disposed section and a horizontally disposed section, said arm being positioned with the vertically disposed section rotatably mounted in the casing, a spring in the casing and connected to the arm and casing whereby the spring rotates the arm so that the horizontally disposed section thereof extends in a plane parallel to that of the bracket, an inverted U-shape lever pivotally mounted on the horizontally disposed section of the arm, a spring on the horizontally disposed section of the arm with one end connected to the arm and the other positioned against a surface of the lever for urging an extended end of the lever upwardly, a yoke having spaced parallel shafts extended therefrom carried by the lever, rollers journaled on the shafts of the yoke, and a clip angle adapted to be positioned on one side of the bow with the bracket mounted on the opposite side, said clip angle providing a rest for an arrow extended through the rollers of the device.

References Cited in the file of this patent

UNITED STATES PATENTS

Number	Name	Date
599,747	Stoddard	Mar. 1, 1898
2,483,928	Ott	Oct. 4, 1949