March 14, 1961 R. C. RENICK ET AL 2,975,272

TRACK CIRCUIT

Filed April 2, 1957

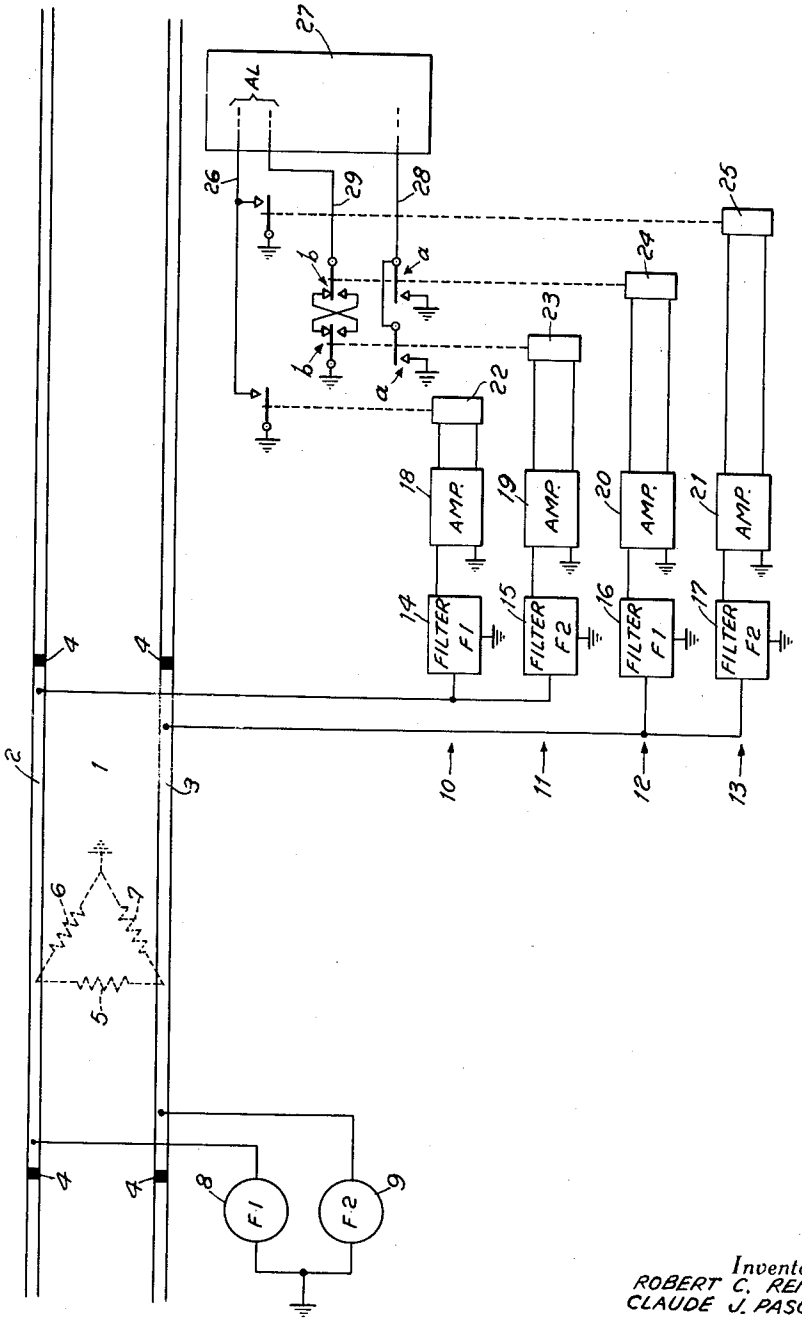

Inventors.
ROBERT C. RENICK
CLAUDE J. PASQUIER

By Bernard E. Franz
Attorney

United States Patent Office 2,975,272
Patented Mar. 14, 1961

2,975,272

TRACK CIRCUIT

Robert C. Renick, Plainfield, N.J., and Claude J. Pasquier, Long Island City, N.Y., assignors to International Telephone and Telegraph Corporation, Nutley, N.J., a corporation of Maryland

Filed Apr. 2, 1957, Ser. No. 650,174

5 Claims. (Cl. 246—34)

This invention relates to a track circuit for indicating the condition of a track section, such, for example, as the presence of a train or a fault in the track.

Various types of track circuits are known for indicating the presence of a train on a section of track, which circuits also usually include an arrangement for warning of broken rails or other defective conditions. Such detecting arrangements usually include a relay connected at one end of the track section between the rails, and a source of energy coupled between the rails at the other end of the track section. The relay is normally operated when the track section is unoccupied and in good condition. A train present on the track section completes a circuit between the rails thereby shunting the relay and causing it to drop to indicate the presence of the train. A broken rail opens the circuit, which also causes the relay to drop.

Several difficulties are experienced with the above system such as poor insulation between the rails causing high leakage currents which are indistinguishable from the effect of a shunt caused by a train. This difficulty has become more severe with the introduction of lighter rolling stock and disc-type brakes which do not exert a cleaning action along the wheel tread, resulting in a relatively high resistance shunt produced by the train which cannot be distinguished from these leakage currents if the track section is long. Because of this, it has been necessary to limit the length of track covered by each track circuit, since the leakage current increases with length.

Various attempts have been made to increase the length of track over which reliable operation may be obtained. For example, alternating current energy has been employed, either pulsed or continuous. Some improvement is thereby obtained because capacitive coupling between rail and wheel is used to advantage when an insulating film prevents good conduction, but the current leakage imposes an upper limit to the length of track over which this improvement is significant.

The prinicipal object of this invention is to provide an improved track circuit.

Another object is to provide a track circuit which permits reliable operation with a longer track section than has been heretofore possible.

According to a main feature of the invention, a track circuit is provided which overcomes the problem of leakage from the rails to ground by coupling a source of energy, preferably alternating current, at one end of the track section between one rail and ground and coupling a detecting arrangement at the other end of the track section between the other rail and ground, to indicate the presence of a train when the level of energy coupled between the rails exceeds a threshold value. With this arrangement only the ungrounded leakage current flows through the detector.

In the preferred form of the invention two frequency sources of electrical energy and two detectors are used, each rail having a different one of said frequency sources

coupled between one end and ground, a detector coupled between the other end and ground, each detector being tuned to the frequency supplied to the opposite rail.

According to another feature, each rail has an additional detector coupled between it and ground, tuned to the frequency supplied to that rail, for determining rail continuity and registering an alarm condition when the signal is greatly reduced.

The above-mentioned and other features and objects of this invention will become more apparent by reference to the following description taken in conjunction with the accompanying drawing, in which the single figure is a block and schematic diagram of a preferred embodiment of the invention showing a track and associated track circuit.

Referring now to the drawing, a track section 1 has rails 2 and 3 which are insulated from adjacent track sections by insulators 4. The track ballast and ties (not shown) produce leakage resistance between the rails, represented by resistance 5; and from each of the rails to ground, represented by resistances 6 and 7, respectively. At one end of the track section sources of alternating current energy are coupled to the rails, represented by generator 8 coupled between rail 2 and ground and generator 9 coupled between rail 3 and ground. The output of these generators is preferably at separate frequencies (F1 and F2) in the audio range, generator 8 having an output at a first frequency (F1) and generator 9 having an output at a second frequency (F2). At the other end of the track section detectors 10 and 11 are coupled between rail 2 and ground and detectors 12 and 13 are coupled between rail 3 and ground. These detectors may comprise filters 14 to 17, respectively, amplifiers 18 to 21, respectively, and relays 22 to 25, respectively. In each detector the filter is coupled between the rail and the input of the amplifier, and the relay is coupled to the output of the amplifier. Filter 14 of detector 10 and filter 16 of detector 12 pass the first frequency (F1), while filter 15 of detector 11 and filter 17 of detector 13 pass the second frequency (F2). The amplifiers 18 to 21 are preferably of the transistor type designed to have a substantial direct-current component in their output proportional to the amplitude of the alternating current input, to operate the respective D.C. operated relays 22 to 25; alternatively the amplifiers 18 to 21 may produce an A.C. output and the relays may be of the alternating current type. Another possibility is to include rectifiers between the amplifiers and the relays.

In the normal condition, the signals at frequency (F1) from generator 8, over rail 2, through detector 10 and the ground return, are at a sufficient level to maintain relay 22 operated and its break contacts open; and the signals at frequency F2 from generator 9 over rail 3, through detector 13 and the ground return are at a sufficient level to maintain relay 25 operated and its break contacts open.

In the event of a circuit interruption, such as broken rail, between generator 8 and detector 10, or between generator 9 and detector 13, the corresponding relay 22 or 25 will be released, and at its contacts connect wire 26 to ground to register an alarm condition in equipment 27.

Equipment 27 is the usual control equipment, which may be used to transmit indication signals to a central-train-control station, or control signals to equipment such as wayside signals and switches.

Further in the normal condition with track section 1 unoccupied, there will be some signal flow from generator 8, over rail 2, through leakage resistance 5, to rail 3 and thence to detector 12 and ground; and also some

signal current at the second frequency from generator **9**, over rail **3**, through leakage resistance **5**, to rail **2** and thence to detector **11** and ground. However, the threshold level of the circuit is so adjusted, for example, by providing a threshold in amplifiers **19** and **20** or in relays **23** and **24**, that relays **23** and **24** do not operate under this condition. Signal current flow in the leakage-to-ground resistances **6** and **7** is returned through the ground path to the generators without flowing through any of the detectors **10** to **13**. The ground plane acts as a shield to reduce cross coupling between the rails. This permits the length of track section **1** to be made longer than could be achieved in prior arrangements, before the cross-coupling exceeds the maximum threshold value allowable for reliable operation.

When a train is present on track section **1**, cross coupling between rails **2** and **3** is substantially increased. If a film on the rails or wheels prevents good conduction, capacitive coupling between the rails and wheels increases the coupling, since audio frequency signals are used. Sufficient current now flows from generator **8** to detector **12**, and from generator **9** to detector **11**, to exceed the threshold and operate the respective relays **23** and **24**. Wire **28** is connected to ground at the make contacts *a* of both relays **23** and **24**, to register a track occupied condition in control equipment **27**.

In the event that only one of the relays **23** or **24** operates but not the other, for any reason, wire **29** is connected to ground through the make contacts *b* of the operated relay and the break contacts *b* of the released relay to register an alarm condition in equipment **27**. At the same time wire **28** is connected to ground at make contacts *a* of the operated relay to register a track occupied condition. This feature is made possible by the two-frequency system, using separate energy sources and detectors.

It will be obvious to those skilled in the art, that a single energy source such as generator **8** may be coupled to only one of the rails such as **2**, with a detector such as **12** connected to the other rail **3**, to register the presence or absence of a train. It is also obvious that such single source, or one of the sources when two are used, may be direct current. However, alternating-current energy sources at frequencies in the audio range are preferred to obtain maximum coupling between the rails while a train is present. In both the specification and claims, a train may be a single car or locomotive or the usual combination of them.

While we have described above the principles of our invention in connection with specific apparatus, it is to be clearly understood that this description is made only by way of example and not as a limitation to the scope of our invention as set forth in the objects thereof and in the accompanying claims.

We claim:

1. A track circuit for detecting the presence of a train on a section of the track, wherein the two rails of one section are insulated from adjoining sections at each end thereof, comprising a unidirectional transmitter including a source of alternating current of a first frequency coupled between a first one of said rails and ground, a source of alternating current of a second frequency coupled between the second of said rails and ground, a first detector connected between said first rail and ground for receiving said second frequency and a second detector connected between said second rail and ground for receiving said first frequency, each of said detectors including a device having a threshold level of response, and means coupled to each of said detectors and responsive to the output current of either one of said detectors for registering an occupied condition for said track section.

2. The track circuit of claim 1 wherein each detector includes a pair of single frequency filters connected in parallel, each detector being responsive to both the first and second frequency respectively.

3. The track circuit of claim 2 and a relay connected to each filter, two of said relays being responsive to a different one of the filter frequencies respectively and having a threshold response.

4. The track circuit of claim 3 wherein the alternating current cross-coupling between the rails is altered by the presence of a train in a track section and a relay in each detector is activated thereby to indicate a track occupied condition.

5. The track circuit of claim 3 wherein the other two relays in said detector are adapted to provide an alarm indication.

References Cited in the file of this patent

UNITED STATES PATENTS

1,683,709	Wenzel	Sept. 11, 1928
2,210,242	Hoppe	Aug. 6, 1940

FOREIGN PATENTS

539,810	Germany	Dec. 5, 1931
597,110	Germany	May 17, 1934
633,423	Germany	July 27, 1936