May 13, 1947. C. H. CAPP 2,420,461

LOUD SPEAKER ANNOUNCING SYSTEM

Filed Sept. 29, 1943 2 Sheets-Sheet 1

Fig. 1.

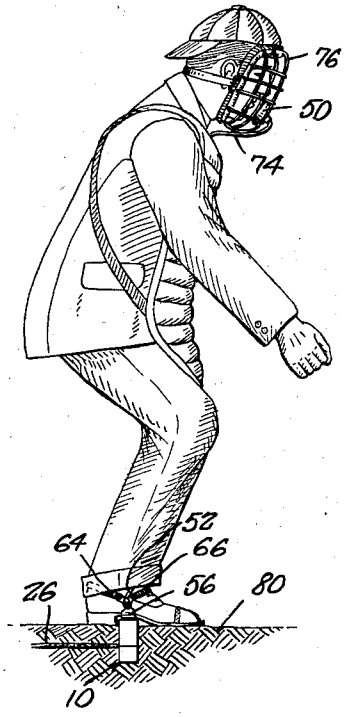

Fig. 2.

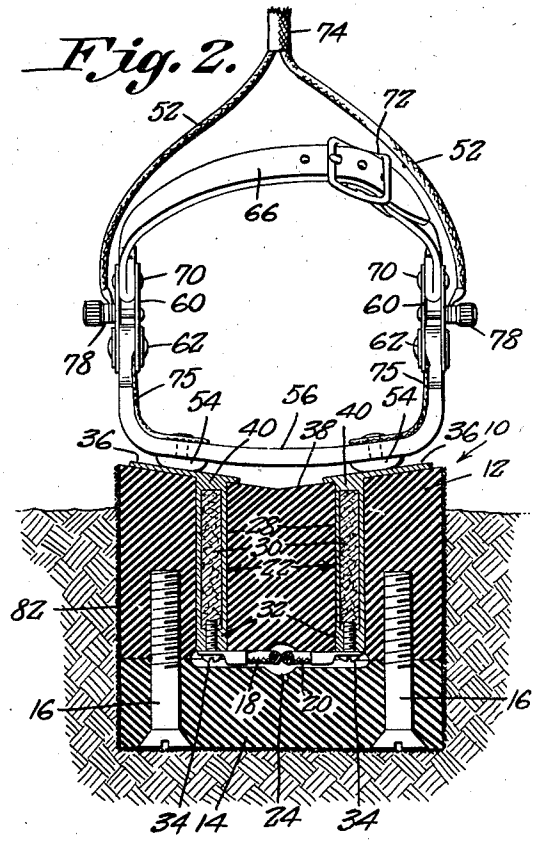

Fig. 3.

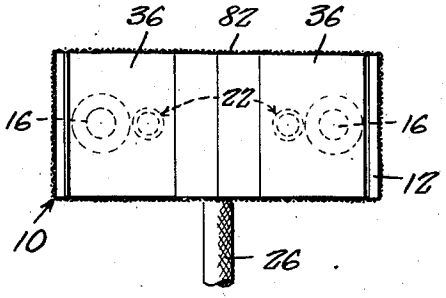

Fig. 4.

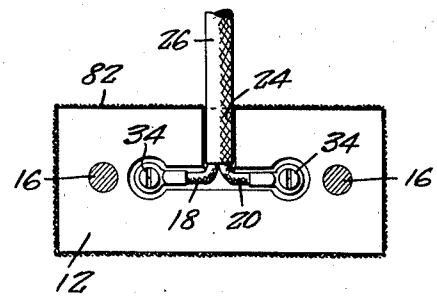

Charles H. Capp,

INVENTOR.

BY

Victor J. Evans & Co.

ATTORNEYS

May 13, 1947. C. H. CAPP 2,420,461

LOUD SPEAKER ANNOUNCING SYSTEM

Filed Sept. 29, 1943 2 Sheets-Sheet 2

Fig. 5.

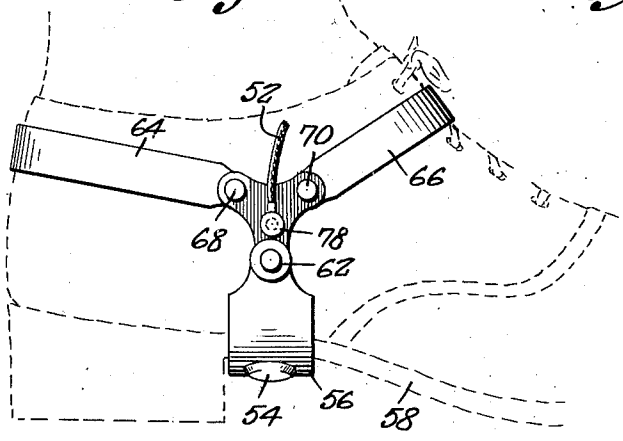

Fig. 6.

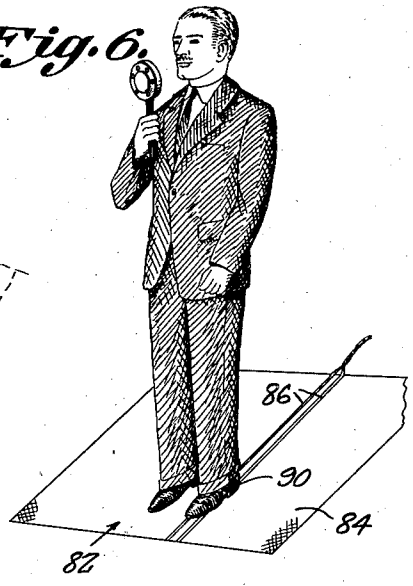

Fig. 7.

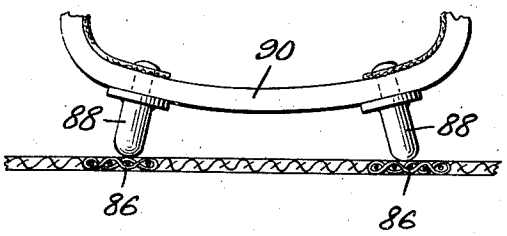

Fig. 8.

Charles H. Capp,
INVENTOR.

BY
Victor J. Evans & Co.
ATTORNEYS

Patented May 13, 1947 2,420,461

UNITED STATES PATENT OFFICE

2,420,461

LOUD-SPEAKER ANNOUNCING SYSTEM

Charles H. Capp, Philadelphia, Pa.

Application September 29, 1943, Serial No. 504,308

5 Claims. (Cl. 179—1)

1

My invention relates to sound systems, and has among its objects and advantages the provision of an improved remote control.

In the accompanying drawing:

Figure 1 is a view illustrating the switch of the system arranged for foot actuation, as by a baseball umpire;

Figure 2 is a sectional view of the foot-operated switch;

Figure 3 is a top view;

Figure 4 is a view of a portion of the foot-operated switch;

Figure 5 is a view illustrating the manner in which the switch actuator is harnessed to the foot;

Figure 6 is a perspective view of a different type of switch;

Figure 7 is a fragmentary view of a switch actuator designed for coaction with the switch of Figure 6; and

Figure 8 is a diagrammatic view of an electric circuit adapted for actuation through the medium of my switch structure.

In the embodiment selected for illustration, Figures 2, 3 and 4 illustrate a switch structure 10 made up of a block 12 of insulating material and a block 14 of similar material secured thereto by screws 16. The wires 18 and 20 of the circuit to be controlled are respectively attached to conductors 22 incorporated in the block 12. Both blocks 12 and 14 are recessed at 24 for accommodating the wires 18 and 20, which wires are assembled as a cord 26 exteriorly of the switch structure.

Each conductor 22 comprises a copper tube 28 filled with copper wool 30. A brass plug 32 is secured in the lower end of each tube 28, which plugs have threaded openings for the reception of terminal screws 34 to which the wires 18 and 20 are respectively connected. Copper or brass contact plates 36 are positioned on the faces 38 of the block 12, which faces incline downwardly toward the center of the block. The plates 36 are respectively connected with the upper ends of the tubes 28 and have plugs 40 extending into the tubes to provide a more secure connection although the plates are preferably additionally secured to the tubes by soldering.

Figure 8 illustrates an electric circuit including an amplifier 42 with which the wires 18 and 20 are electrically connected, the amplifier being operatively connected with a loud speaker 44 through the medium of wires 46. The amplifier may be connected with a source of current (not shown) through the medium of line wires 48.

2

The microphone 50 includes wires 52 respectively connected with terminals 54 engageable with the plates 36 to electrically connect the microphone with the sound system.

In Figures 2 and 5, the terminals 54 are fixedly secured to a brace 55 comprising a leather strap 56 bendable to a generally U-shaped contour to have snug fitting engagement with the shank structure of the shoe 58 of Figure 5. To the ends of the strap 56 are pivotally attached plates 60, as at 62, which plates have attaching straps 64 and 66 pivotally connected therewith as at 68 and 70. Each strap is provided with a buckle 72 so that the strap 56 may be drawn tightly to the shoe. The wires 52 of Figure 8 are respectively connected with the plates 60 and are assembled in a cord 74, see Figure 2, which cord may extend through one of the trouser legs for connection with the microphone 50. Wires 75 electrically connect the respective plates 60 with the terminals 54.

Figure 1 illustrates the microphone as being mounted in a conventional umpire's mask 76. Thus the umpire may talk into the microphone and control the sound system through manipulation of the terminals 54 with respect to the plates 36. The circuit is closed by bringing the terminals 54 into engagement with the plates 36. The annular mounting of the plates 36 provides a trough-like configuration which permits the umpire to easily maintain the terminals 54 in proper relationship with the plates 36 through the sense of touch. Terminal screws 78 are attached to the plates 60 for connection with the wires 52.

Figures 1 and 2 illustrate the switch structure as being substantially embedded in the earth 80 so that the forepart of the foot may rest on the earth and pivot thereon for making and breaking the circuit.

Both blocks 12 and 14 are provided with copper mesh 82 to prevent outside interference and to ground if necessary. The cords 74 and 26 are encased in copper wire mesh while the copper wool 30 is employed for sensitive contact purposes. Figure 1 illustrates the cord 26 as being located underground to eliminate interference with the players.

Figures 6 and 7 illustrate a different form of switch structure 82 wherein an insulative floor mat 84 is provided with two copper conductors 86 adapted to be electrically engaged by terminals 88 attached to a strap 90 corresponding to the strap 56. Conductors 86 may be woven into the mat 84. The switch structure of Figure 6 is

particularly well suited for inside lecture service.

Without further elaboration, the foregoing will so fully illustrate my invention, that others may, by applying current knowledge, readily adapt the same for use under various conditions of service.

I claim:

1. In a system of the type described a brace removeably attachable to a shoe of a person comprising adjustable straps engageable under the instep of the shoe and about the arch and heel, contacts carried by the brace adapted to contact electrical terminals, a member engageable with the shank structure of the shoe, plate elements pivotally connected with said member, and removable attaching straps secured to said plate elements, said plate elements electrically connecting the electrical terminals with said contacts.

2. The invention described in claim 1 wherein said terminals are mounted in an insulative body and in which the terminals have plates engageable with said contacts and arranged in downwardly converging relationship to provide a trough-like configuration to facilitate rotation of the contacts on the plates.

3. The invention described in claim 1 wherein said terminals are mounted in an insulative body and in which the terminals have plates engageable with said contacts and arranged in downwardly converging relationship to provide a trough-like configuration to facilitate rotation of the contacts on the plates, said terminals including tubular members, and metallic wool conductor material in the tubular members.

4. The invention described in claim 1 wherein an insulative body is provided for said terminals, said insulative body comprising a first section and a second section, said first section being provided with openings and said terminals including conductor members extending through said openings, means for connecting the conductors with the loud speaker circuit, said means lying adjacent one face of said first section, said second section comprising a cover for said means, and means detachably connecting the second section with the first section.

5. In a system of the type described, a brace for detachable connection with a shoe, said brace comprising a leather strap generally U-shaped in contour for removably fitting the shank structure of the shoe exteriorly thereof, plates pivotally connected with the ends of said strap, electrical terminals secured to said strap having electrical connections with terminal screws on said plates and a pair of removable and adjustable attaching straps pivotally connected with the respective plates.

CHARLES H. CAPP.

REFERENCES CITED

The following references are of record in the file of this patent:

UNITED STATES PATENTS

Number	Name	Date
1,768,207	Lumpkin et al.	June 24, 1930
1,137,060	Kellum	Apr. 27, 1915
1,940,491	Freitag	Dec. 19, 1933
1,550,269	Lancot	Aug. 18, 1925

FOREIGN PATENTS

Number	Country	Date
369,051	Germany	Feb. 14, 1923
8,940	Great Britain	Dec. 11, 1913
291,601	Germany	June 5, 1916