US 20120105335A1

(19) United States

(12) Patent Application Publication

Suddreth et al.

(10) Pub. No.: US 2012/0105335 A1

(43) Pub. Date: May 3, 2012

(54) TOUCH SCREEN DISPLAY ASSEMBLY

(75) Inventors: **John G. Suddreth**, Cave Creek, AZ (US); **Douglas J. Harris**, Glendale, AZ (US)

(73) Assignee: **HONEYWELL INTERNATIONAL INC.**, Morristown, NJ (US)

(21) Appl. No.: **12/939,025**

(22) Filed: **Nov. 3, 2010**

Publication Classification

(51) **Int. Cl.**
G06F 3/041 (2006.01)

(52) **U.S. Cl.** **345/173**

(57) **ABSTRACT**

A touch screen display assembly including, but not limited to, a touch sensitive screen, a bezel at least partly framing the touch sensitive screen, and a stabilizing member connected to the bezel and disposed proximate the touch sensitive screen. The stabilizing member is configured to stabilize a hand of an operator at multiple positions around a periphery of the touch sensitive screen when the operator interacts with the touch sensitive screen.

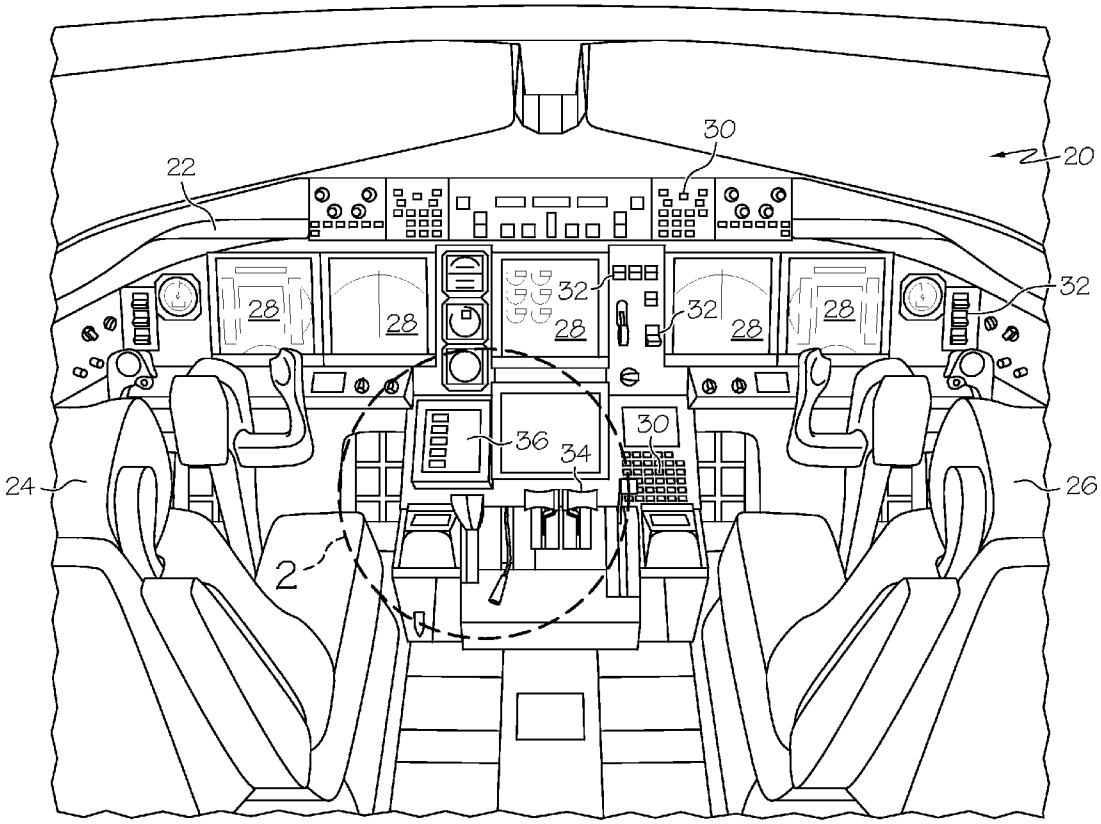

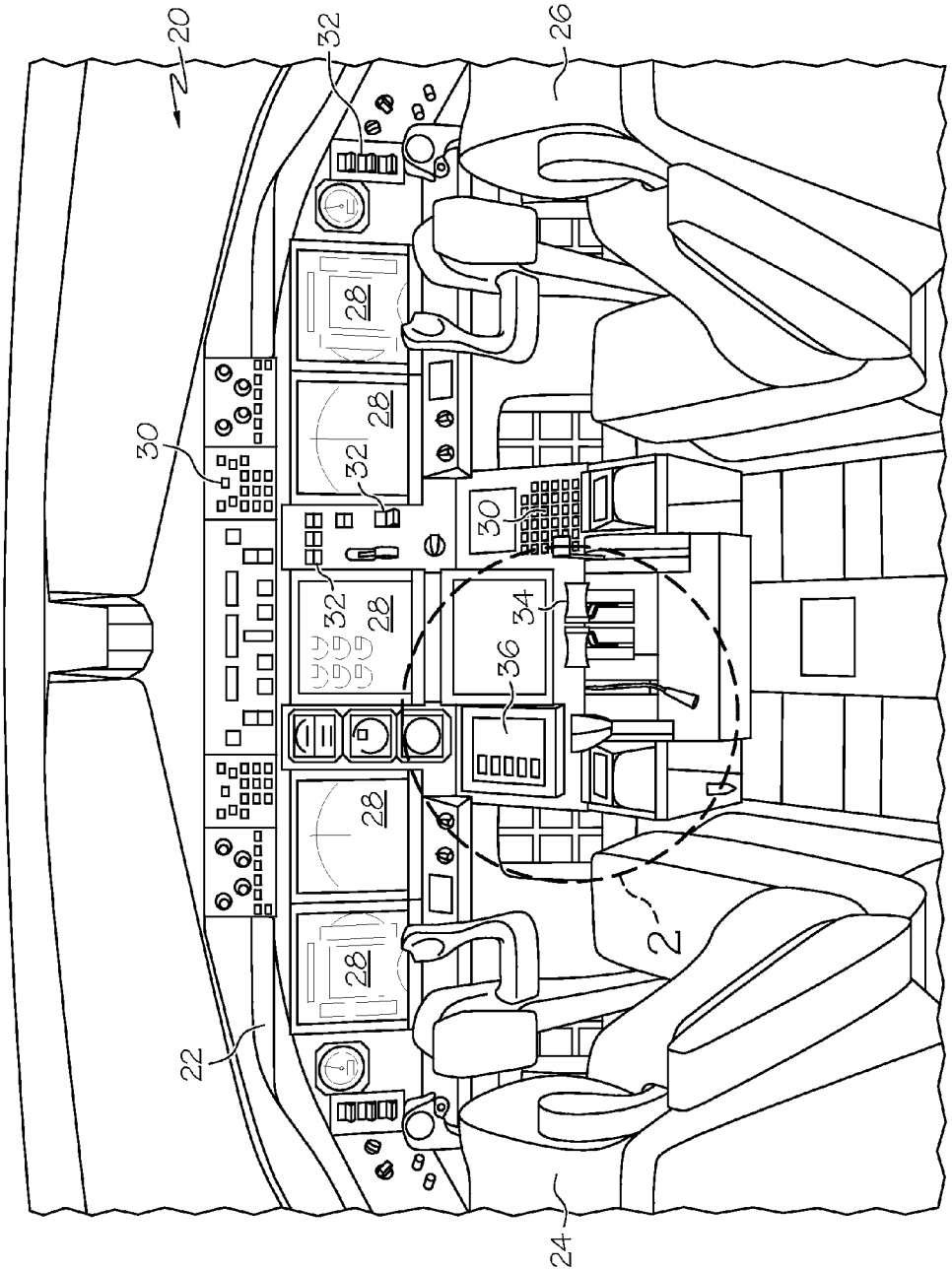

FIG. 1

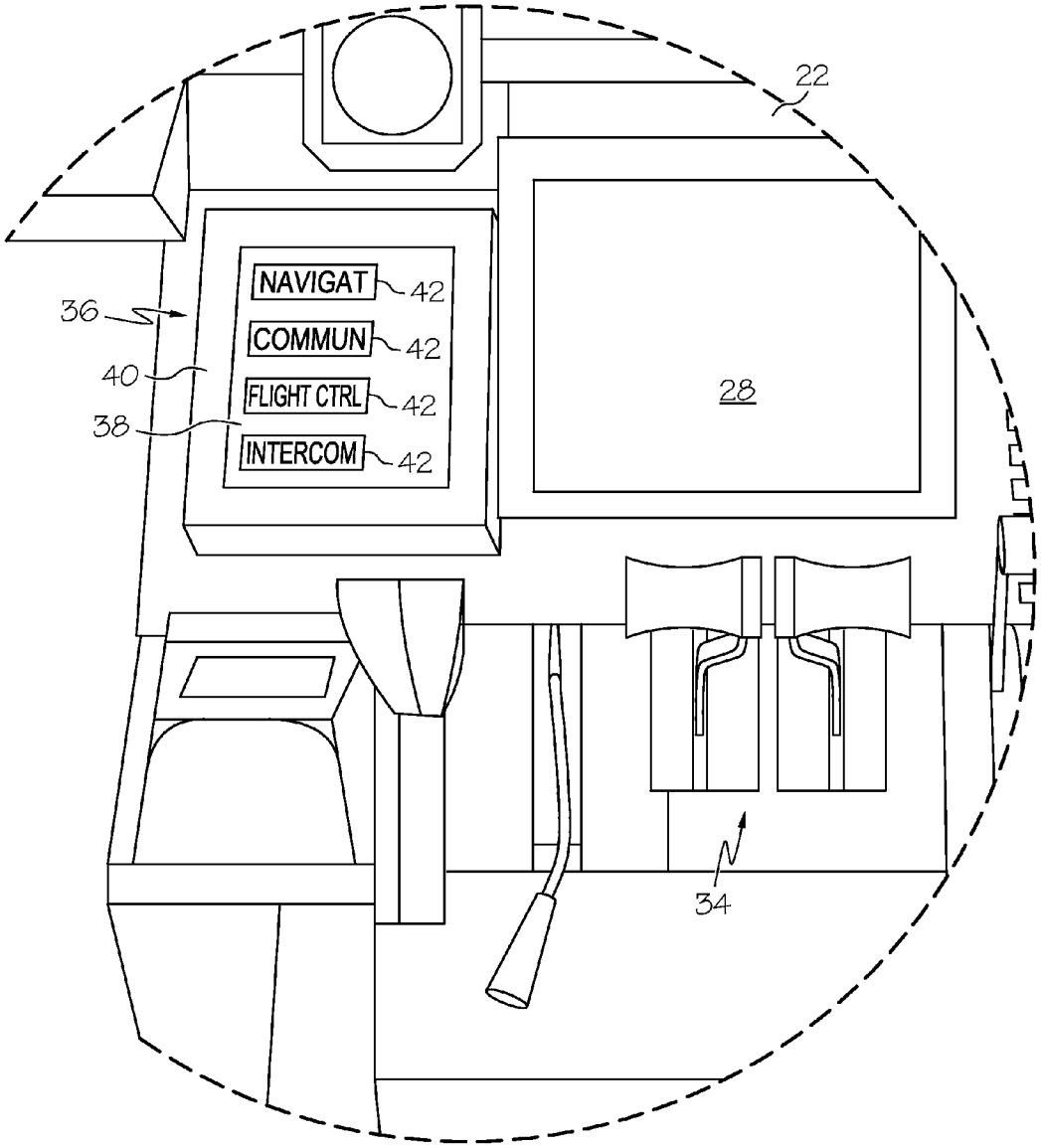
22
NAVIGAT
42
COMMUN
42
FLIGHT CTRL
42
INTERCOM
42
36
40
38
28
34

FIG. 2

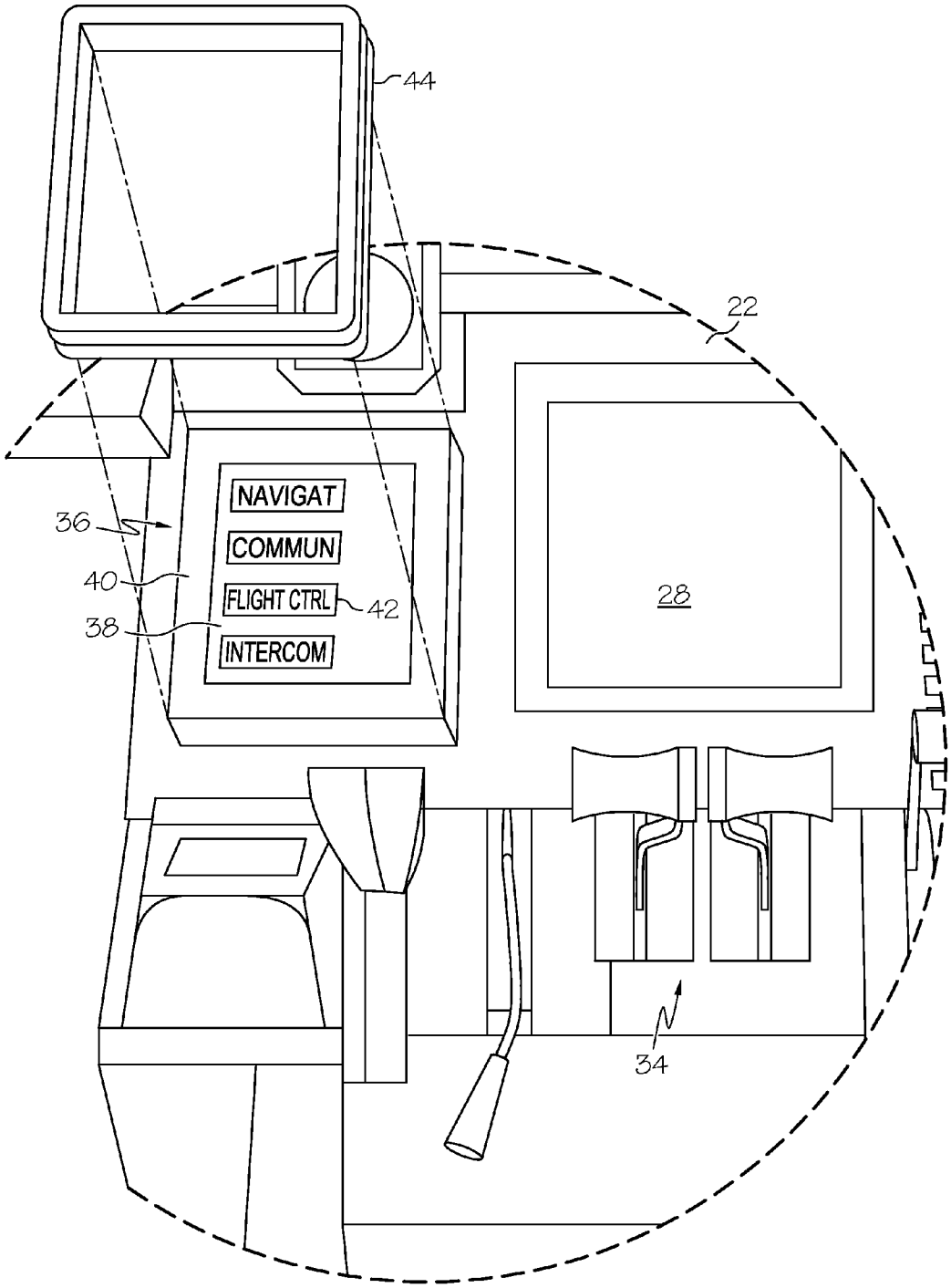

FIG. 3

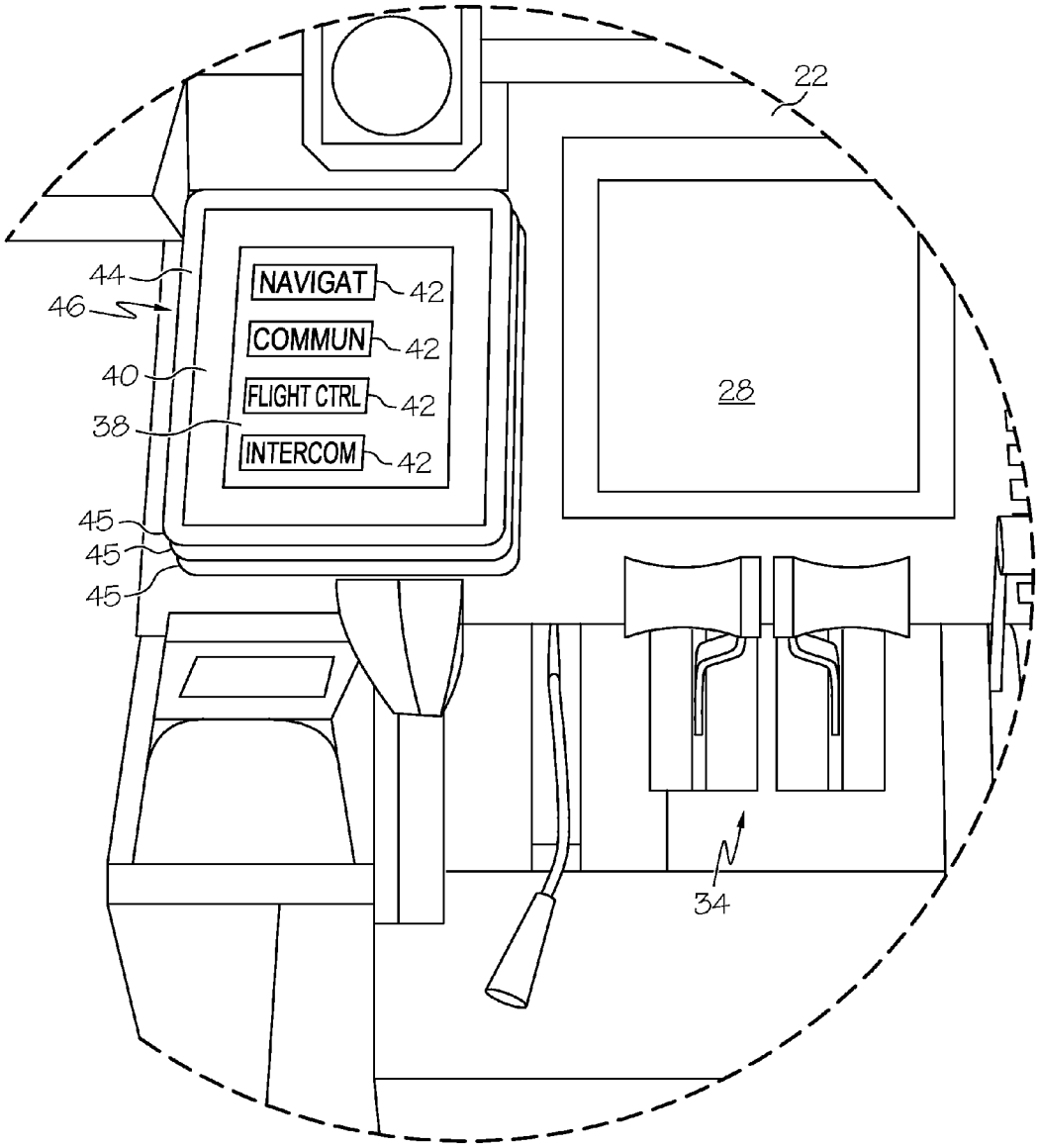
22
44
46
40
38
45
45
45
NAVIGAT
42
COMMUN
42
FLIGHT CTRL
42
INTERCOM
42
28
34

FIG. 4

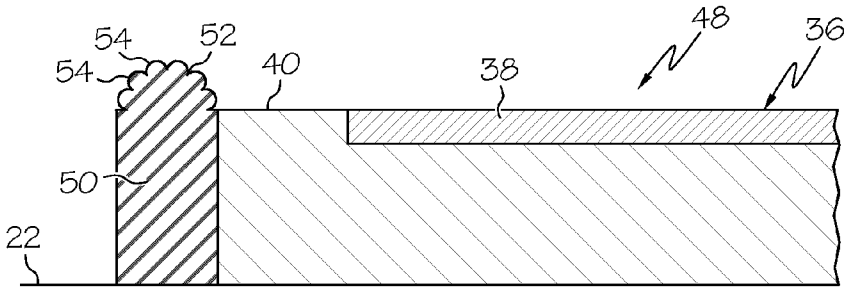

FIG. 5

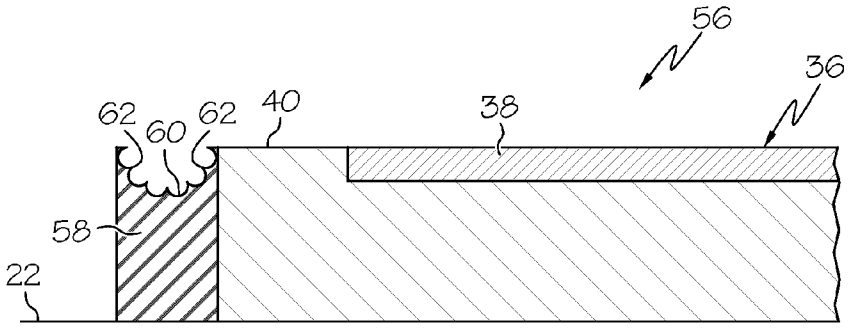

FIG. 6

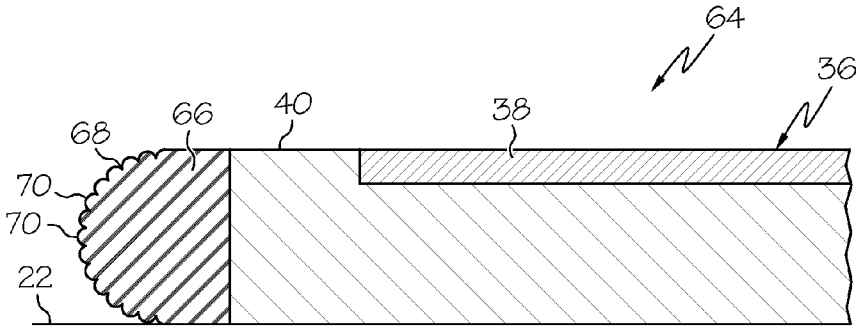

FIG. 7

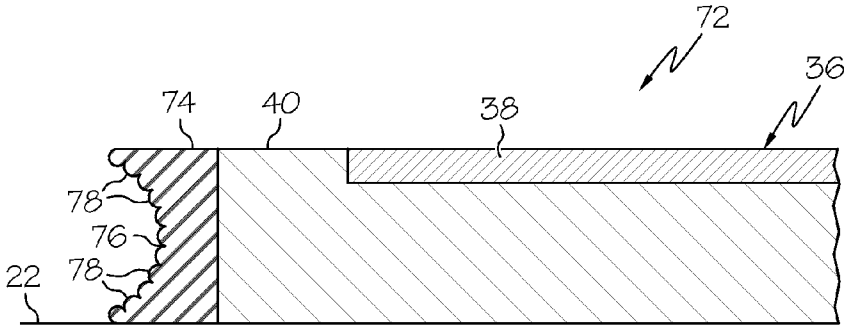

FIG. 8

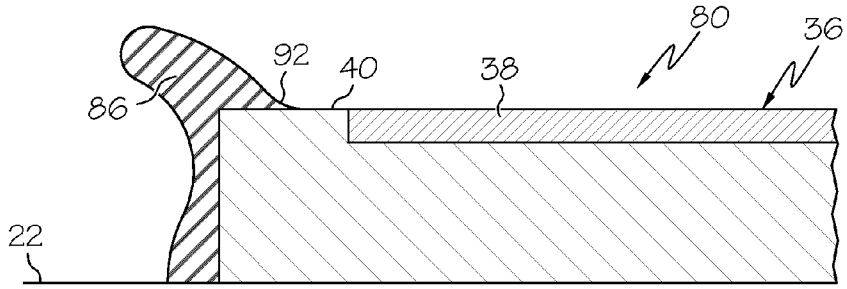

FIG. 9

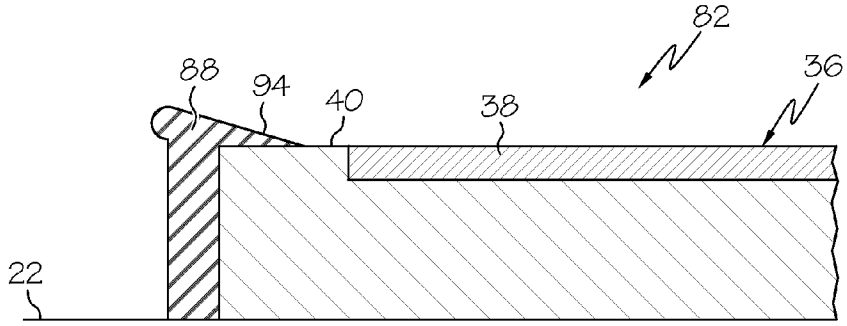

FIG. 10

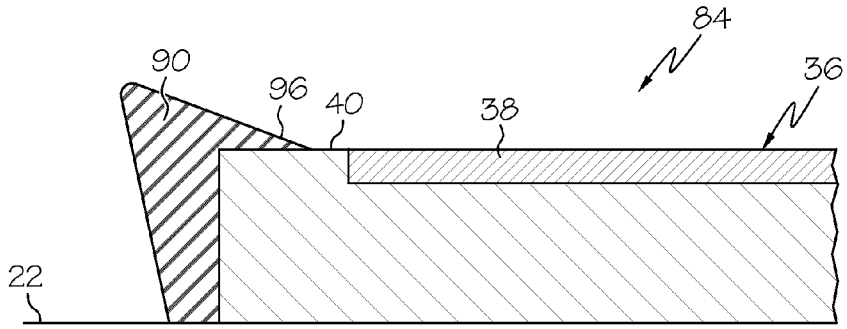

FIG. 11

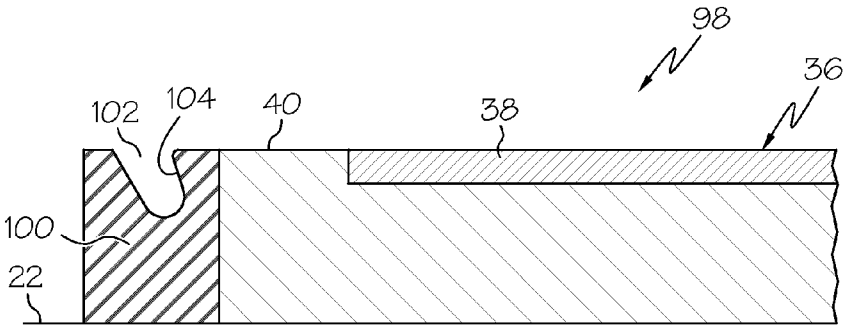

FIG. 12

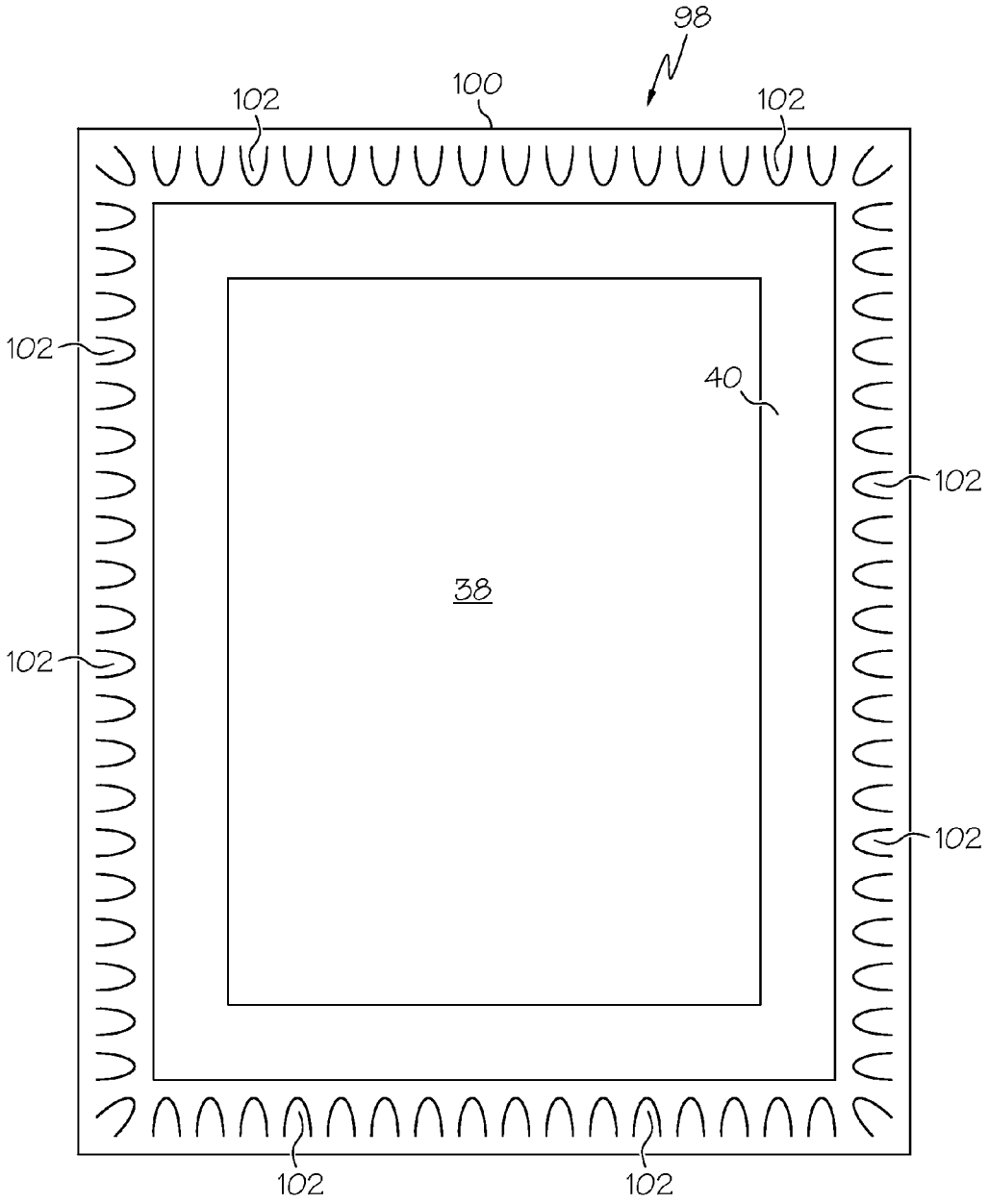

FIG. 13

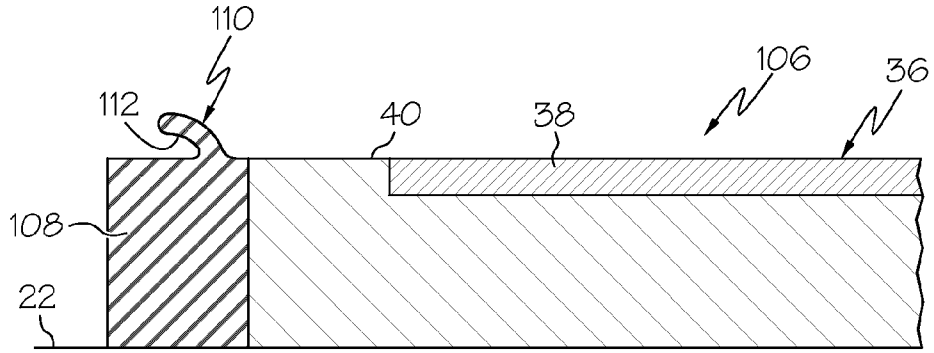

FIG. 14

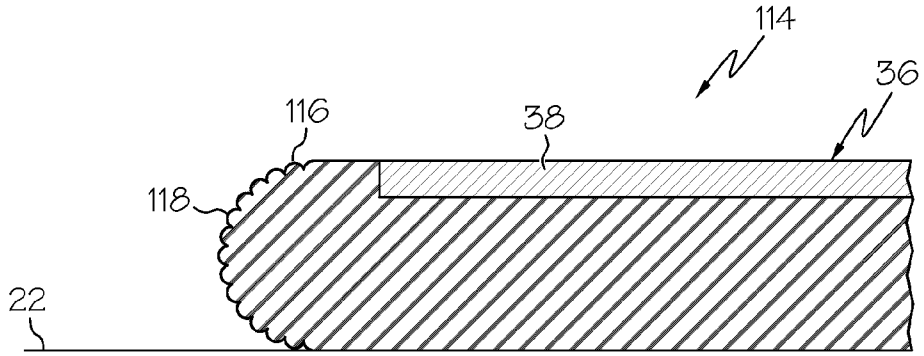

FIG. 16

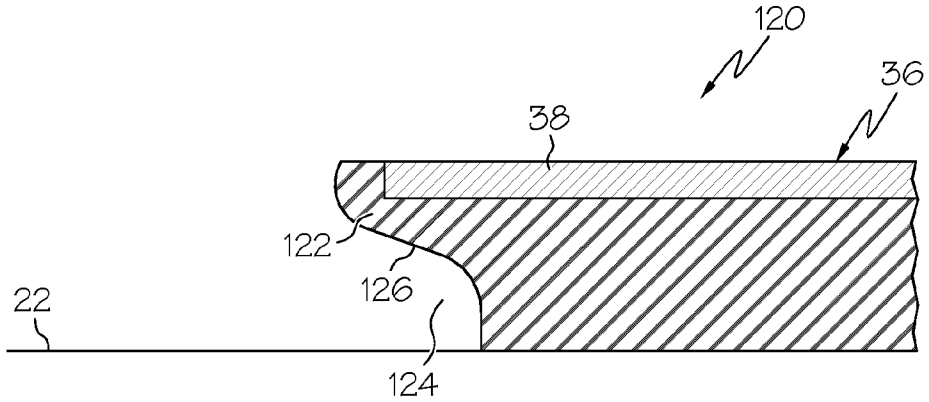

FIG. 17

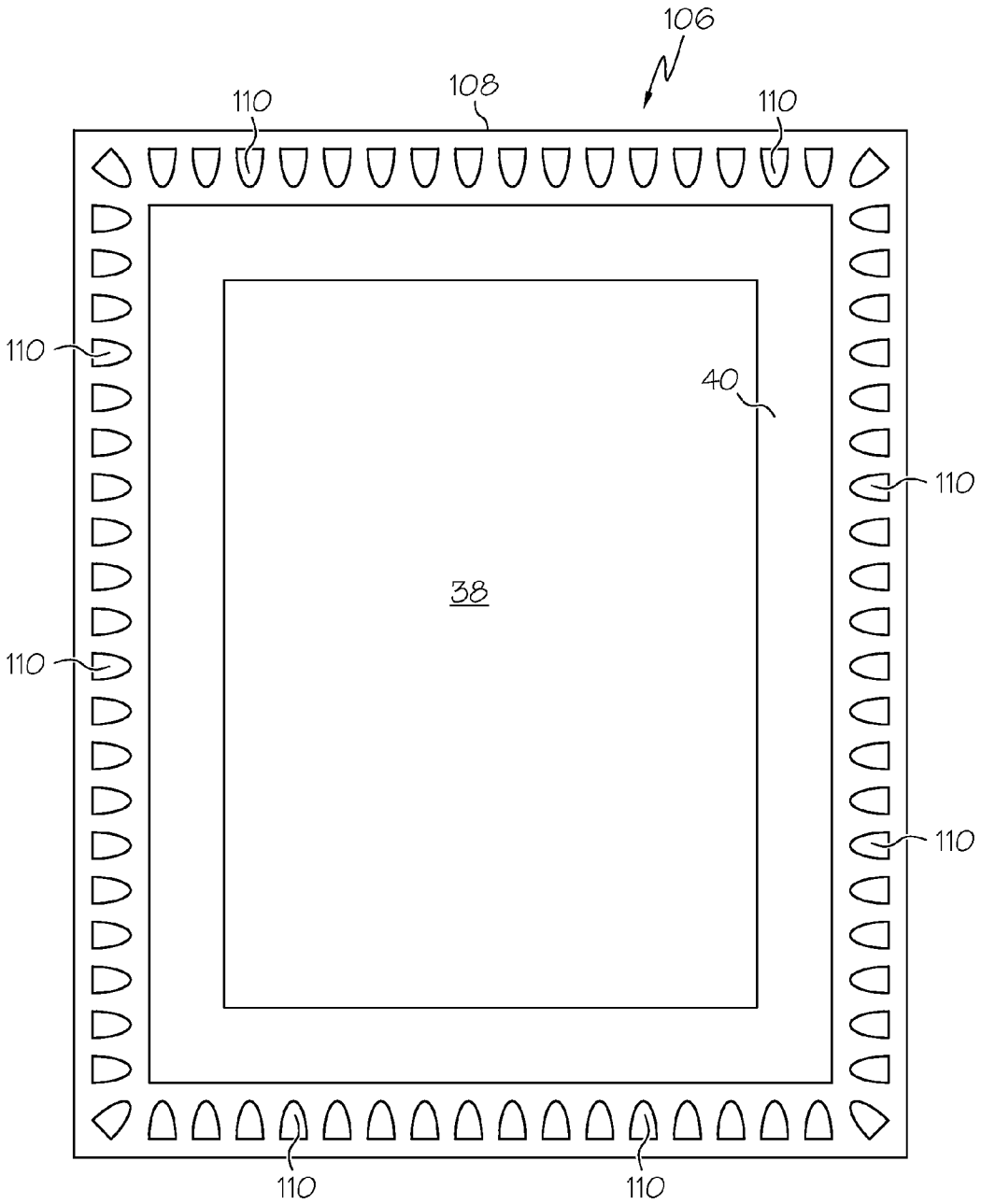

FIG. 15

TOUCH SCREEN DISPLAY ASSEMBLY

TECHNICAL FIELD

[0001] The present invention generally relates to a display assembly and more particularly relates to a touch screen display assembly.

BACKGROUND

[0002] Touch screen displays are display screens that are configured to detect one or more touch events or gestures on their surface. Touch screen displays are increasingly replacing traditional control mechanisms such as buttons, dials and switches to control commanded systems. One area where touch screen displays are increasingly being utilized is in vehicles to control various subsystems of those vehicles. For instance, touch screen displays may be used in an automobile to control a navigation system and in aircraft, a touch screen display may be used to control communication systems, navigation systems, flight control systems, etc.

[0003] One concern surrounding the use of a touch screen display to control a system onboard a moving vehicle is the possibility that unanticipated motion of the vehicle (for instance, motion caused by air turbulence, rough roads, etc.), may result in unintended relative motion between an operator's finger and the touch sensitive screen of the touch screen display. This, in turn, could result in an unintended and undesired control input into the commanded system.

[0004] To address this concern, touch screen display manufacturers and others have traditionally provided a hand rest positioned adjacent a bottom side of the display screen of the touch screen display. This solution has proven adequate for applications where the display screen of the touch screen display is relatively small compared with the hand of the operator. However, this solution may not be adequate when the display screen is relatively large because, in such applications, an operator may need to lift his or her hand off of the hand rest to reach remote portions of the display screen.

BRIEF SUMMARY

[0005] A touch screen display assembly is disclosed herein.

[0006] In an embodiment, the touch screen display assembly includes, but is not limited to, a touch sensitive screen, a bezel that at least partly frames the touch sensitive screen, and a stabilizing member that is connected to the bezel and disposed proximate the touch sensitive screen. The stabilizing member is configured to stabilize a hand of an operator at a plurality of positions around a periphery of the touch sensitive screen when the operator interacts with the touch sensitive screen.

[0007] In another embodiment, the touch screen display assembly includes, but is not limited to, a touch sensitive screen and a bezel that frames the touch sensitive screen. The bezel includes an integral stabilizing feature that is configured to stabilize a hand of an operator at a plurality of positions around a periphery of the touch sensitive screen when the operator interacts with the touch sensitive screen.

[0008] In another embodiment, the touch screen display assembly includes, but is not limited to, a touch sensitive screen and a bezel that frames the touch sensitive screen. The bezel is configured to mount the touch sensitive screen to a mounting surface and is further configured to support the touch sensitive screen in a spaced apart relationship with the mounting surface to form a recess between an under side of the bezel and the mounting surface and thereby permit an operator to wrap a finger of a hand around and behind the bezel to stabilize the hand of the operator at a plurality of positions around a periphery of the touch sensitive screen when the operator interacts with the touch sensitive screen.

BRIEF DESCRIPTION OF THE DRAWINGS

[0009] The present invention will hereinafter be described in conjunction with the following drawing figures, wherein like numerals denote like elements, and

[0010] FIG. **1** is a fragmentary perspective view illustrating the inside of aircraft cockpit;

[0011] FIG. **2** is an expanded fragmentary perspective view illustrating a portion of an instrument panel shown in FIG. **1** including a touch screen display;

[0012] FIG. **3** is an expanded fragmentary perspective view similar to FIG. **2** illustrating a stabilizing member being assembled to the touch screen display;

[0013] FIG. **4** is an expanded fragmentary perspective view similar to FIG. **2** illustrating an embodiment of a touch screen display assembly made in accordance with the teachings of the present disclosure;

[0014] FIG. **5** is a fragmentary schematic cross-sectional view of a portion of an alternate embodiment of the touch screen display assembly of FIG. **4**;

[0015] FIG. **6** is a fragmentary schematic cross-sectional view of a portion of an alternate embodiment of the touch screen display assembly of FIG. **4**;

[0016] FIG. **7** is a fragmentary schematic cross-sectional view of a portion of another alternate embodiment of the touch screen display assembly of FIG. **4**;

[0017] FIG. **8** is a fragmentary schematic cross-sectional view of a portion of another alternate embodiment of the touch screen display assembly of FIG. **4**;

[0018] FIG. **9** is a fragmentary schematic cross-sectional view of a portion of another alternate embodiment of the touch screen display assembly of FIG. **4**;

[0019] FIG. **10** is a fragmentary schematic cross-sectional view of a portion of another alternate embodiment of the touch screen display assembly of FIG. **4**;

[0020] FIG. **11** is a fragmentary schematic cross-sectional view of a portion of another alternate embodiment of the touch screen display assembly of FIG. **4**;

[0021] FIG. **12** is a fragmentary schematic cross-sectional view of a portion of another alternate embodiment of the touch screen display assembly of FIG. **4**;

[0022] FIG. **13** is a plan view of the embodiment of the touch screen display assembly illustrated in FIG. **12**;

[0023] FIG. **14** is a fragmentary schematic cross-sectional view of a portion of another alternate embodiment of the touch screen display assembly of FIG. **4**;

[0024] FIG. **15** is a plan view of the embodiment of the touch screen display assembly illustrated in FIG. **14**;

[0025] FIG. **16** is a fragmentary schematic cross-sectional view of a portion of another embodiment of a touch screen display assembly; and

[0026] FIG. **17** is a fragmentary cross-sectional view of a portion of yet another embodiment of a touch screen display assembly.

DETAILED DESCRIPTION

[0027] The following detailed description is merely exemplary in nature and is not intended to limit the invention or the

application and uses of the invention. Furthermore, there is no intention to be bound by any theory presented in the preceding background or the following detailed description.

[0028] An improved touch screen display assembly is disclosed herein that permits an operator to anchor their hand at various locations around a periphery of the touch screen display assembly while interacting with the touch sensitive screen. The touch screen display assembly includes one or more anchor points that allow an operator to grasp, grip, grab, hold, and/or otherwise engage the touch screen display assembly in a manner that allows the operator to stabilize one or more fingers of his or her hand with respect to the touch screen display assembly. Once the operator's fingers are stabilized with respect to the touch screen display assembly, the operator can substantially eliminate relative motion between the operator's hand and the touch screen display assembly. In this manner, the operator may interact with, and accurately actuate desired control options displayed on the touch sensitive screen even while the vehicle is operating in a turbulent environment. A further understanding of the various embodiments of the touch screen display assembly disclosed herein may be obtained through a review of the illustrations accompanying this application together with a review of the detailed description that follows.

[0029] FIG. **1** is a fragmentary perspective view illustrating the inside of an exemplary aircraft cockpit **20**. Although the context of the following discussion is with respect to touch screen display assemblies used in aircraft, it should be understood that the teachings herein pertain to touch screen display assemblies used in any type of vehicle including, but not limited to, land based vehicles such as automobiles and trains as well as watercraft and spacecraft. Additionally, the teachings herein are not limited to vehicle applications. Rather, the teachings herein may also be used together with touch screen displays that are employed in stationary applications such as information kiosks and automatic teller machines as well as with touch screen displays that are hand held or otherwise not mounted to a surface.

[0030] Aircraft cockpit **20** includes an instrument panel **22** positioned to be accessible from a pilot seat **24** and a copilot seat **26**. Instrument panel **22** includes various readouts **28** and various control features such as buttons **30**, switches **32**, and throttle controls **34**. Also mounted on instrument panel **22** is a touch screen display **36**. Touch screen displays are well known and are disclosed in U.S. Pat. Nos. 3,662,105 and 4,286,289, each of which are hereby incorporated herein in their entirety by reference. Touch screen display **36** may be configured to provide control inputs into one or more commanded systems. For example, touch screen display **36** may be configured to control landing gear deployment, flight control surface actuation, and radio and navigation system operations.

[0031] FIG. **2** is an expanded fragmentary perspective view illustrating the portion of instrument panel **22** shown in FIG. **1** that is encircled by the dashed line and annotated with the letter "A", which includes touch screen display **36**. Touch screen display **36** includes a touch sensitive screen **38** surrounded or framed entirely or in part by bezel **40**. Touch sensitive screen **38** may employ any of a variety of touch sensitive technologies that enable touch sensitive screen **38** to detect an actuating interaction by an operator either on or near a surface of touch sensitive screen **38**. Such actuating interaction may be carried through the use of a finger, a stylus, a laser, a light pen, and/or any other device that the operator uses to either physically contact the surface of touch sensitive screen **38**, that the operator positions in close proximity to the surface of touch sensitive screen **38**, or that the operator direct towards the surface of touch sensitive screen **38**. Graphic and/or text based images **42** are depicted on touch sensitive screen **38**. These graphic and/or text based images **42** correspond with control inputs, commands, and/or other inputs required by the commanded system. An operator provides such input to the commanded system by touching touch sensitive screen **38** at a location where a desired graphic and/or text based image **42** is displayed. Touch sensitive screen **38** registers the touch and transmits the command to the commanded system. Bezel **40** houses touch sensitive screen **38** and may also mount touch sensitive screen **38** to instrument panel **22**.

[0032] Touch sensitive screen **38** commonly includes a glass window, a plexiglass window, or other transparent material at an outer periphery to interface with, and to receive touches initiated by the operator. Bezel **40** commonly comprises a metal or plastic material. Consequently, touch sensitive screen **38** and bezel **40** commonly provide relatively slippery surfaces (i.e., they each have relatively low coefficients of static friction) and, consequently, are not well suited for serving as an anchor point for an operator's hand.

[0033] FIG. **3** is an expanded fragmentary perspective view similar to FIG. **2** illustrating a stabilizing member **44** being assembled to touch screen display **36**. In the illustrated embodiment, stabilizing member **44** is configured to fit around, and substantially surround (frame) a periphery of, bezel **40**. In some embodiments, a friction or interference fit may be employed when assembling stabilizing member **44** to touch screen display **36**. In other embodiments, stabilizing member **44** may be affixed to bezel **40** or to instrument panel **22** through the use of mechanical fasteners and/or adhesives. In other embodiments, as discussed below, stabilizing member **44** may not comprise a separate component, but rather, may be integrated into bezel **40**. In still other embodiments, stabilizing member **44** may surround or be positioned adjacent to only a portion of bezel **40**. For example, in some embodiments, stabilizing member **44** may be positioned adjacent to only a top portion of bezel **40** (i.e., the portion that is the most remote from pilot seat **24** and copilot seat **26**). In yet other embodiments, multiple stabilizing members **44** may be positioned at multiple locations around the bezel **40**.

[0034] Stabilizing member **44** may comprise any suitable material. In some embodiments, such as the one illustrated in FIG. **4**, stabilizing member **44** has contours and surface features which are configured to enhance an operator's ability to grasp, grab, the grip or otherwise engage stabilizing member **44**. In other embodiments, stabilizing member **44** may comprise a material having a coefficient of static friction that exceeds the coefficient of static friction of bezel **40** and of a surface of touch sensitive screen **38**. The use of such materials may enable an operator to press one or more fingers of their hand against stabilizing member **44** whereby the elevated level of friction would allow the operator to stabilize his or her hand at a location where their fingers contact stabilizing member **44**. Such materials include, but are not limited to, rubber, polymeric materials, and foam or other compressible materials. In still other embodiments, stabilizing member **44** may include contours and surface features which enhance an operator's ability to engage stabilizing member **44** and may also comprise materials having an elevated level of friction.

[0035] FIG. **4** is an expanded fragmentary perspective view similar to FIG. **2** illustrating an embodiment of a touch screen display assembly **46** made in accordance with the teachings of the present disclosure. As illustrated, stabilizing member **44** substantially surrounds (frames) a periphery of bezel **40** and is substantially stationary with respect to bezel **40**. An operator may anchor their hand to touch screen display assembly **46** by placing one or more fingers of their hand on stabilizing member **44**. Then, while keeping those fingers engaged with stabilizing member **44**, the operator may use one or more additional fingers to interact with touch sensitive screen **38**. The connection between the operator's fingers and stabilizing member **44** permits the operator to synchronize movement of the operator's hand with any movement experienced by touch screen display assembly **46**. For instance, if touch screen display assembly **46** rises or falls suddenly because of turbulence experienced by the aircraft, the connection between the operator's fingers and stabilizing member **44** will cause the operator's hand to also rise or fall in a manner that corresponds with the rise and fall of touch screen display assembly **46**. Accordingly, there is substantially no relative movement between the operator's hand and touch screen display assembly **46** as a result of turbulence, road conditions, etc. and this permits the operator to accurately select a desired graphic and/or text based image **42** without any disruption due to turbulence or other motion related disturbances.

[0036] As illustrated in FIG. **4**, stabilizing member **44** includes multiple ribs **45** arranged adjacent to one another and extending in parallel fashion along an exterior surface around an entire periphery of stabilizing member **44**. Because ribs **45** extend around an entire periphery of stabilizing member **44**, they allow an operator to grasp touch screen display assembly **46** from substantially any position/orientation with respect to touch screen display assembly **46**. In other words, and with continuing reference to FIG. **1**, a pilot sitting in pilot seat **24** could use his right hand to engage ribs **45** situated on the right side of touch screen display assembly **46** and a copilot sitting in copilot seat **26** could use with his left hand to engage ribs **45** situated on the left side of touch screen display assembly **46**. Although ribs **45** have been illustrated as the anchoring feature in FIG. **4**, it should be understood that many different contours, surface features, and combinations thereof may be employed to allow an operator to anchor their hand to touch screen display assembly **46**. Many of these different contours, surface features, and combinations thereof are discussed below.

[0037] FIG. **5** is a fragmentary schematic cross-sectional view of a portion of an alternate embodiment of a touch screen display assembly **48**. In the illustrated embodiment, a stabilizing member **50** has been assembled to touch screen display **36**. Stabilizing member **50** includes a raised surface **52** that protrudes above a surface of touch sensitive screen **38** (from the perspective of FIG. **5**) and that extends in a direction that is substantially parallel to bezel **40**. A plurality of ribs **54** are defined in raised surface **52**. In the illustrated embodiment, ribs **54** extended along raised surface **52** in a direction that is substantially parallel to bezel **40** (i.e., ribs **54** and raised surface **52** extend in a direction that is perpendicular to the plane of FIG. **5**). In some embodiments, ribs **54** will be generally parallel to their respective adjacent portions of bezel **40** at all locations around a bezel **40** while in other embodiments, ribs **54** may be perpendicular to bezel **40** or may be oriented at any other desired angle. In other embodiments, raised surface **52** may not include ribs **54**, but rather, may be generally smooth. In other embodiments, an upper surface of stabilizing member **50** may not include raised surface **52** but rather, may be generally flat and co-planner with the upper surfaces of touch sensitive screen **38** and bezel **40**. In such embodiments, ribs **54** may be defined in the generally flat upper surface of stabilizing member **50** to provide surface features that allow an operator to grip and anchor their hand to touch screen display assembly **48**.

[0038] FIG. **6** is a fragmentary schematic cross-sectional view of a portion of an alternate embodiment of a touch screen display assembly **56**. In the illustrated embodiment, a stabilizing member **58** has been assembled to touch screen display **36**. Stabilizing member **58** includes a depressed surface **60** that recedes below a surface of touch sensitive screen **38** (from the perspective of FIG. **6**) and that extends in a direction that is substantially parallel to bezel **40**. In the illustrated embodiment, depressed surface **60** is contoured to conform to an operator's fingertips and thereby provide the operator with the location around the perimeter of bezel **40** that the operator can grasp onto. In other embodiments, any desired contour may be employed. A plurality of ribs **62** are defined in depressed surface **60**. In the illustrated embodiment, ribs **62** extended along depressed surface **60** in a direction that is substantially parallel to bezel **40** (i.e., ribs **62** and depressed surface **60** extend in a direction that is perpendicular to the plane of FIG. **6**). In some embodiments, ribs **62** will be generally parallel to their respective adjacent portions of bezel **40** at all locations around a bezel **40** while in other embodiments, ribs **62** may be perpendicular to bezel **40** or may be oriented at any other desired angle. In other embodiments, depressed surface **60** may not include ribs **62**, but rather, may be generally smooth.

[0039] FIG. **7** is a fragmentary schematic cross-sectional view of a portion of another alternate embodiment of a touch screen display assembly **64**. In the illustrated embodiment, a stabilizing member **66** has been assembled to touch screen display **36**. Stabilizing member **66** includes a protruding surface **68** that is oriented generally transverse to an upper surface of touch sensitive screen **38** (from the perspective of FIG. **7**), that protrudes in a direction away from touch sensitive screen **38**, and that extends in a direction that is substantially parallel to bezel **40**. In the illustrated embodiment, protruding surface **68** is contoured to permit an operator's fingers to grasp onto it. A plurality of ribs **70** are defined in protruding surface **68**. In the illustrated embodiment, ribs **70** extended along a protruding surface **68** in a direction that is substantially parallel to bezel **40** (i.e., ribs **70** and protruding surface **68** extend in a direction that is perpendicular to the plane of FIG. **6**). In some embodiments, ribs **70** will be generally parallel to their respective adjacent portions of bezel **40** at all locations around a bezel **40** while in other embodiments, ribs **70** may be perpendicular to bezel **40** or may be oriented at any other desired angle. In other embodiments, protruding surface **68** may not include ribs **70** but rather, may be generally smooth.

[0040] FIG. **8** is a fragmentary schematic cross-sectional view of a portion of another alternate embodiment of a touch screen display assembly **72**. In the illustrated embodiment, a stabilizing member **74** has been assembled to touch screen display **36**. Stabilizing member **74** includes a depressed surface **76** that is oriented generally transversely to touch sensitive screen **38** (from the perspective of FIG. **8**), that is depressed inwardly, in a direction towards touch screen dis-

play **36**, and that extends in a direction that is substantially parallel to bezel **40**. In the illustrated embodiment, depressed surface **76** is contoured to conform to an operator's fingertips and thereby provide the operator with a location around the perimeter of bezel **40** that the operator can grasp onto. In other embodiments, any desired contour may be employed. A plurality of ribs **78** are defined in depressed surface **76**. In the illustrated embodiment, ribs **78** extended along depressed surface **60** in a direction that is substantially parallel to **26** (i.e., ribs **78** and depressed surface **76** extend in a direction that is perpendicular to the plane of FIG. **8**). In some embodiments, ribs **78** will be generally parallel to their respective adjacent portions of bezel **40** at all locations around a bezel **40** while in other embodiments, ribs **78** may be perpendicular to bezel **40** or may be oriented at any other desired angle. In other embodiments, depressed surface **76** may not include ribs **70**, but rather, may be generally smooth.

[0041] FIGS. **9-11** are fragmentary schematic cross-sectional views of a portion of alternate embodiments of touch screen display assemblies. FIG. **9** illustrates touch screen display assembly **80**, FIG. **10** illustrates touch screen display assembly **82**, and FIG. **11** illustrates touch screen display assembly **84**. Touch screen display assembly **80** includes a stabilizing member **86**, touch screen display assembly **82** includes a stabilizing member **88**, and touch screen display assembly **84** includes stabilizing member **92**. Stabilizing members **86**, **88** and **92** are each variations of an embodiment where the stabilizing member has a generally hooked cross-sectional contour that extends in an upward direction above a surface of touch sensitive screen **38** (from the perspective of FIGS. **9-11**) and a that also extends in an outward direction, away from touch sensitive screen **38**. This upward and outward extension forms an overhang that provides an operator with a location around the perimeter of bezel **40** that the operator can grasp on to. It should be understood that the cross-sectional contours depicted in FIGS. **9-11** are merely exemplary in nature and that in other embodiments, any desired configuration having a generally hooked cross-sectional contour that forms an overhang may be employed without a parting from the teachings herein. In still other embodiments, ribs or other surface features may be disposed on the surface of stabilizing members **86**, **88** and **90** to provide added grip.

[0042] Stabilizing member **86** includes a bezel engaging region **92**, stabilizing member **88** includes a bezel engaging region **94**, and stabilizing member **90** includes a bezel engaging region **96**. Bezel engaging regions **92**, **94** and **96** are the portions of stabilizing members **86**, **88**, and **90** that are most proximate to, and that come into contact with, an upward facing surface of bezel **40** (from the perspective of FIGS. **9-11**). Bezel engaging regions **92**, **94**, and **96** are also disposed in close proximity to touch sensitive screen **38**. For this reason, bezel engaging regions **92**, **94**, and **96** are contoured to have relatively wide, obtuse angles with respect to the upper surface of touch sensitive screen **38**. In some examples, it may be desirable to ensure that the angle is not less than 135 degrees. By giving bezel engaging regions **92**, **94**, and **96** wide, obtuse angles with respect to the upper surface of touch sensitive screen **38**, it is less likely that there will be any interference between the bezel engaging regions and the operator's finger as the operator interacts with touch sensitive screen **38**. This configuration has the advantage of providing anchor points for an operator's hand relatively close to touch sensitive screen **38** without interfering with the operator's ability to interact with touch sensitive screen **38**.

[0043] FIG. **12** is a fragmentary schematic cross-sectional view of a portion of another alternate embodiment of a touch screen display assembly **98**. In the illustrated embodiment, a stabilizing member **100** has been assembled to touch screen display **36**. Stabilizing member **100** includes a recessed finger anchor **102**. With continuing reference to FIG. **6**, recessed finger anchor **102** differs from depressed surface **60**. Depressed surface **60** extends along a length of stabilizing member **58**. Recessed finger anchor **102** does not extend through stabilizing member **100** but rather is configured to accommodate a single fingertip. An operator may insert their finger into recessed finger anchor **102** and rest their fingertip on fingertip receiving wall **104**, and thereby anchor their hand to touch screen display assembly **98**. The operator may then use their free fingers or thumb to interact with touch sensitive screen **38**. Multiple recessed finger anchors **102** may be spaced apart around the periphery of the stabilizing member **100**.

[0044] FIG. **13** is a plan view of touch screen display assembly **98**. In the illustrated embodiment, multiple recessed finger anchors **102** are disposed around stabilizing member **100**. In the illustrated embodiment, recessed finger anchors **102** are positioned relatively close to one another. This configuration permits an operator to anchor multiple fingers at once to stabilizing member **100** to provide a robust anchoring engagement between the operator's hand and stabilizing member **100**. By providing multiple recessed finger anchors **102** at multiple locations around the periphery of touch sensitive screen **38**, the operator is presented with the ability to anchor their hand to touch screen display assembly **98** from various angles and positions. In other embodiments, recessed finger anchors **102** may be defined in only a portion of stabilizing member **100** as opposed to around its entire periphery.

[0045] FIG. **14** is a fragmentary schematic cross-sectional view of a portion of another alternate embodiment of a touch screen display assembly **106**. In the illustrated embodiment, a stabilizing member **108** has been assembled to touch screen display **36**. Stabilizing member **108** includes a raised finger anchor **110**. With continuing reference to FIG. **12**, raised finger anchor **110** differs from recessed finger anchor **102**. While recessed finger anchor **102** is recessed below an upper surface of stabilizing member **100**, raised finger anchor **110** projects outwardly from an upper surface of stabilizing member **108**. Similar to recessed finger anchor **102**, raised finger anchor **110** is also configured to accommodate a single fingertip. An operator may insert their finger into raised finger anchor **110** and rest their fingertip on fingertip receiving wall **112**, and thereby anchor their hand to touch screen display assembly **106**. The operator may then use their free fingers or thumb to interact with touch sensitive screen **38**.

[0046] FIG. **15** is a plan view of touch screen display assembly **106**. In the illustrated embodiment, multiple raised finger anchors **110** are disposed around stabilizing member **108**. In the illustrated embodiment, raised finger anchors **110** are positioned relatively close to one another. This configuration permits an operator to anchor multiple fingers at once to stabilizing member **108** to provide a robust anchoring engagement between the operator's hand and stabilizing member **108**. By providing multiple raised finger anchors **110** at multiple locations around the periphery of touch sensitive screen **38**, the operator is presented with the ability to anchor

their hand to touch screen display assembly **106** from various angles and positions. In other embodiments, raised finger anchors **110** may be defined in only a portion of stabilizing member **108** as opposed to around its entire periphery.

[0047] The anchoring features described above and shown in FIGS. **4-15** are not an exhaustive disclosure of anchoring features that could be implemented on a stabilizing member. Other features may also be employed. For example, the ribs (ribs **45**) disclosed in FIG. **4** could be modified from having rounded edges to having sharp or squared off edges. In another example, surface features may be disposed along the outer periphery of the stabilizing member that provided texture similar to that of sandpaper. In still other examples, rather than using a plurality of parallel ribs, a single rib forming a lip at an edge of the stabilizing member may be employed. In still another embodiment, the periphery of the stabilizing member may have a checkerboard-type pattern is of surfaces at different elevations, thereby forming a surface having multiple recessed pockets. Many additional textures, contours, surface features, and combinations thereof may also be employed.

[0048] FIG. **16** is a fragmentary schematic cross-sectional view of a portion of another embodiment of a touch screen display assembly **114**. Touch screen display assembly **114** includes touch sensitive screen **38**, and bezel **116**. Bezel **116** frames touch screen display assembly **114** and mounts touch screen display assembly **114** to instrument panel **22**. Unlike the various embodiments of the touch screen display assemblies described above, touch screen display assembly **114** does not include a stabilizing member. Rather, bezel **116** includes a stabilizing feature **118** that is integral with bezel **116**. In the embodiment illustrated in FIG. **16**, stabilizing feature **118** is a series of aligned ribs extending in a direction perpendicular to the plane of FIG. **16** along bezel **116**, similar to ribs **70** of stabilizing member **66** illustrated in FIG. **7**. It should be understood that, although stabilizing feature **118** is illustrated in FIG. **16** as a series of ribs, any suitable stabilizing feature, including any of the configurations of the various stabilizing members discussed and described above and in FIGS. **5-15**, or any other configuration effective to permit an operator to anchor their hand with respect to touch screen display assembly **114** may also be employed.

[0049] FIG. **17** is a fragmentary cross-sectional view of a portion of yet another embodiment of a touch screen display assembly **120**. Touch screen display assembly at **120** includes a touch sensitive screen **38** and a bezel **122** that frames touch sensitive screen **38** and that mounts touch to instrument panel **22**. Bezel **122** is configured to support a position that is spaced apart from instrument panel **22** and to form a recess **124** between underside **126** of bezel **122** and instrument panel **22**. Recess **124** provides a space for an operator to wrap their fingers around a bezel **122** and thereby grasp touch screen display assembly **120**. This allows an operator to anchor their hand with respect to touch screen display assembly **121** interacting with touch sensitive screen. In some embodiments, touch sensitive screen **38** may be substantially parallel with respect to instrument panel **22**, in which case recess **124** may extend around an entire periphery of bezel **122** making it possible for the operator to grasp touch screen display assembly **120** from any angle. In other embodiments, it may be desirable to cant touch sensitive screen **38** angle with respect to instrument panel **22**. In such a configuration, recessed **124** may extend around only a portion of the periphery of bezel on **22**.

[0050] While at least one exemplary embodiment has been presented in the foregoing detailed description of the invention, it should be appreciated that a vast number of variations exist. It should also be appreciated that the exemplary embodiment or exemplary embodiments are only examples, and are not intended to limit the scope, applicability, or configuration of the invention in any way. Rather, the foregoing detailed description will provide those skilled in the art with a convenient road map for implementing an exemplary embodiment of the invention. It being understood that various changes may be made in the function and arrangement of elements described in an exemplary embodiment without departing from the scope of the invention as set forth in the appended claims.

What is claimed is:

1. A touch screen display assembly comprising:

a touch sensitive screen;

a bezel at least partly framing the touch sensitive screen; and

a stabilizing member connected to the bezel and disposed proximate the touch sensitive screen, the stabilizing member configured to stabilize a hand of an operator at a plurality of positions around a periphery of the touch sensitive screen when the operator interacts with the touch sensitive screen.

2. The touch screen display assembly of claim **1**, wherein the stabilizing member comprises a first material having a higher coefficient of static friction than a second material comprising the touch sensitive screen.

3. The touch screen display assembly of claim **2**, wherein the stabilizing member comprises rubber.

4. The touch screen display assembly of claim **1**, wherein the stabilizing member comprises a raised surface that is situated above a surface of the touch sensitive screen.

5. The touch screen display assembly of claim **4**, wherein the raised surface comprises a plurality of ribs.

6. The touch screen display assembly of claim **1**, wherein the stabilizing member comprises a depressed surface that is situated below a surface of the touch sensitive screen.

7. The touch screen display assembly of claim **6**, wherein the depressed surface comprises a plurality of ribs.

8. The touch screen display assembly of claim **1**, wherein the stabilizing member comprises a protruding surface that is oriented generally transverse to a surface of the touch sensitive screen and that protrudes in a direction away from the touch sensitive screen.

9. The touch screen display assembly of claim **8**, wherein the protruding surface comprises a plurality of ribs.

10. The touch screen display assembly of claim **1**, wherein the stabilizing member comprises a depressed surface that is oriented generally transverse to a surface of the touch sensitive screen and that is depressed in a direction towards the touch sensitive screen.

11. The touch screen display assembly of claim **1**, wherein the stabilizing member has a generally hooked cross-sectional contour that extends in an upward direction above a surface of the touch sensitive screen and that extends in an outward direction away from the touch sensitive screen to form an overhang that may be grasped by one or more fingers of the hand of the operator.

12. The touch screen display assembly of claim **11**, wherein a portion of the stabilizing member that is closest to

the touch sensitive screen has a bezel engaging region that is oriented at an angle of at least 135 degrees with respect to the touch sensitive screen.

13. The touch screen display assembly of claim **1**, wherein the stabilizing member includes a recessed finger anchor configured to receive a finger of the hand of the operator.

14. The touch screen display assembly of claim **13**, wherein the stabilizing member includes a plurality of the recessed finger anchors disposed along the stabilizing member around the periphery of the touch sensitive screen.

15. The touch screen display assembly of claim **13**, wherein the stabilizing member includes a plurality of the recessed finger anchors aligned with one another and disposed substantially adjacent one another to receive multiple fingers of the hand of the operator.

16. The touch screen display assembly of claim **1**, wherein the stabilizing member includes a raised finger anchor configured to receive a finger of the hand of the operator.

17. The touch screen display assembly of claim **16**, wherein the stabilizing member includes a plurality of the raised finger anchors disposed along the stabilizing member around the periphery of the touch sensitive screen.

18. The touch screen display assembly of claim **16**, wherein the stabilizing member includes a plurality of the raised finger anchors aligned with one another and disposed substantially adjacent one another to receive multiple fingers of the hand of the operator.

19. A touch screen display assembly comprising:

a touch sensitive screen; and

a bezel framing the touch sensitive screen, the bezel including an integral stabilizing feature configured to stabilize a hand of an operator at a plurality of positions around a periphery of the touch sensitive screen when the operator interacts with the touch sensitive screen.

20. A touch screen display assembly comprising:

a touch sensitive screen; and

a bezel framing the touch sensitive screen, the bezel configured to mount the touch sensitive screen to a mounting surface and further configured to support the touch sensitive screen in a spaced apart relationship with the mounting surface to form a recess between an under side of the bezel and the mounting surface and thereby permit an operator to wrap a finger of a hand around and behind the bezel to stabilize the hand of the operator at a plurality of positions around a periphery of the touch sensitive screen when the operator interacts with the touch sensitive screen.

* * * * *