(12) INTERNATIONAL APPLICATION PUBLISHED UNDER THE PATENT COOPERATION TREATY (PCT)

(19) World Intellectual Property Organization
International Bureau

(43) International Publication Date
09 November 2017 (09.11.2017)

WIPO | PCT

(10) International Publication Number
WO 2017/192570 A1

(51) International Patent Classification:
B60H 1/00 (2006.01) *F02M 21/06* (2006.01)
B60H 1/32 (2006.01) *F25B 19/00* (2006.01)
F02M 21/02 (2006.01) *B60P 3/20* (2006.01)

(21) International Application Number:
PCT/US2017/030615

(22) International Filing Date:
02 May 2017 (02.05.2017)

(25) Filing Language: English

(26) Publication Language: English

(30) Priority Data:
62/330,971 03 May 2016 (03.05.2016) US

(71) Applicant: **CARRIER CORPORATION** [US/US]; One Carrier Place, Farmington, Connecticut 06032 (US).

(72) Inventors: **POOLMAN, Ciara**; 6304 Thompson Road, Syracuse, New York 13057 (US). **CHOPKO, Robert A.**; P.O. Box 4805, Carrier Parkway, TR20, Syracuse, New York 13221 (US).

(74) Agent: **STANGO, Nicholas R.**; CANTOR COLBURN LLP, 20 Church Street, 22nd Floor, Hartford, Connecticut 06103-3207 (US).

(81) Designated States *(unless otherwise indicated, for every kind of national protection available)*: AE, AG, AL, AM, AO, AT, AU, AZ, BA, BB, BG, BH, BN, BR, BW, BY, BZ, CA, CH, CL, CN, CO, CR, CU, CZ, DE, DJ, DK, DM, DO, DZ, EC, EE, EG, ES, FI, GB, GD, GE, GH, GM, GT, HN, HR, HU, ID, IL, IN, IR, IS, JP, KE, KG, KH, KN, KP, KR, KW, KZ, LA, LC, LK, LR, LS, LU, LY, MA, MD, ME, MG, MK, MN, MW, MX, MY, MZ, NA, NG, NI, NO, NZ, OM, PA, PE, PG, PH, PL, PT, QA, RO, RS, RU, RW, SA, SC,

(54) Title: INTEGRATED COMPRESSED GAS TRANSPORT REFRIGERATION UNIT FOR COMPRESSED GAS FUELED VEHICLES

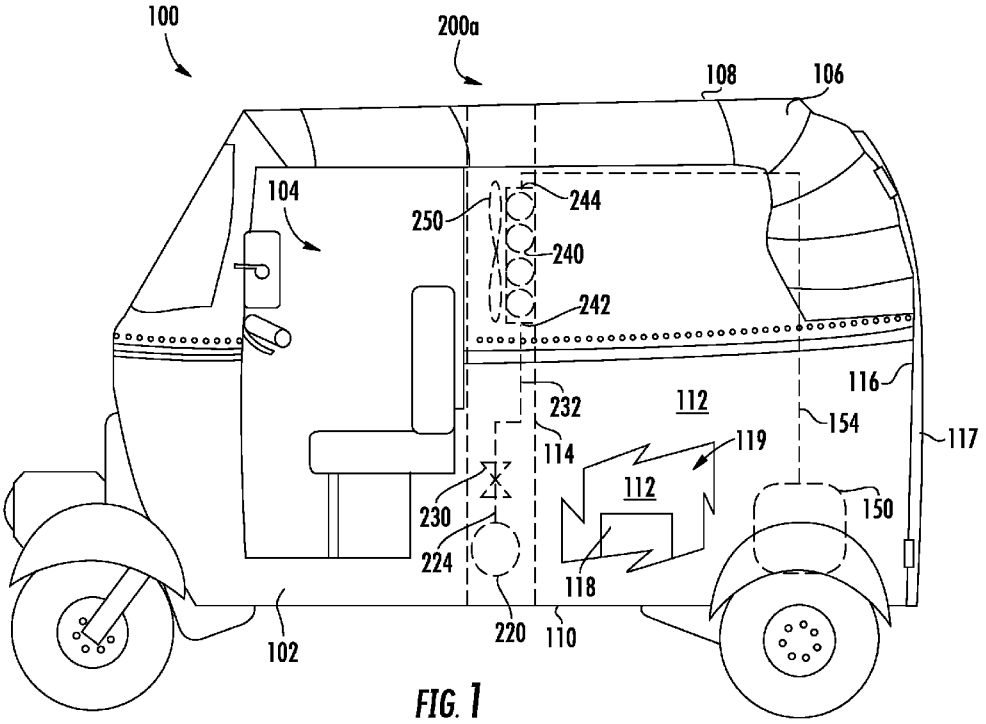

FIG. 1

(57) Abstract: A transport refrigeration system comprises a vehicle having a refrigerated cargo space; a compressed gas tank configured to store gas; an engine configured to power the vehicle through combustion of the gas; and a pressure reducing mechanism fluidly connecting the compressed gas tank and the engine. The pressure reducing mechanism configured to reduce the pressure of the gas from the compressed gas tank. The transport refrigeration system also comprises an evaporator thermally coupled to the pressure reducing mechanism and the refrigerated cargo space. The evaporator is configured to cool the refrigerated cargo space. A temperature of the gas and a temperature of the evaporator are reduced as a result of the reduction in pressure of the gas by the pressure reducing mechanism.

WO 2017/192570 A1

[Continued on next page]

SD, SE, SG, SK, SL, SM, ST, SV, SY, TH, TJ, TM, TN, TR, TT, TZ, UA, UG, US, UZ, VC, VN, ZA, ZM, ZW.

(84) Designated States *(unless otherwise indicated, for every kind of regional protection available)*: ARIPO (BW, GH, GM, KE, LR, LS, MW, MZ, NA, RW, SD, SL, ST, SZ, TZ, UG, ZM, ZW), Eurasian (AM, AZ, BY, KG, KZ, RU, TJ, TM), European (AL, AT, BE, BG, CH, CY, CZ, DE, DK, EE, ES, FI, FR, GB, GR, HR, HU, IE, IS, IT, LT, LU, LV, MC, MK, MT, NL, NO, PL, PT, RO, RS, SE, SI, SK, SM, TR), OAPI (BF, BJ, CF, CG, CI, CM, GA, GN, GQ, GW, KM, ML, MR, NE, SN, TD, TG).

Declarations under Rule 4.17:

— *as to applicant's entitlement to apply for and be granted a patent (Rule 4.17(ii))*
— *as to the applicant's entitlement to claim the priority of the earlier application (Rule 4.17(iii))*
— *of inventorship (Rule 4.17(iv))*

Published:

— *with international search report (Art. 21(3))*

INTEGRATED COMPRESSED GAS TRANSPORT REFRIGERATION UNIT FOR COMPRESSED GAS FUELED VEHICLES

BACKGROUND OF THE DISCLOSURE

[0001] The embodiments herein generally relate to transport refrigeration systems and more specifically, the transport refrigeration systems powered by compressed gas.

[0002] Typically, cold chain distribution systems are used to transport and distribute cargo, or more specifically perishable goods and environmentally sensitive goods (herein referred to as perishable goods) that may be susceptible to temperature, humidity, and other environmental factors. Perishable goods may include but are not limited to fruits, vegetables, grains, beans, nuts, eggs, dairy, seed, flowers, meat, poultry, fish, ice, and pharmaceuticals. Advantageously, cold chain distribution systems allow perishable goods to be effectively transported and distributed without damage or other undesirable effects.

[0003] Refrigerated vehicles and trailers are commonly used to transport perishable goods in a cold chain distribution system. A transport refrigeration system is mounted to the vehicles or to the trailer in operative association with a cargo space defined within the vehicles or trailer for maintaining a controlled temperature environment within the cargo space.

[0004] Conventionally, transport refrigeration systems used in connection with refrigerated vehicles and refrigerated trailers include a transport refrigeration unit having a refrigerant compressor, a condenser with one or more associated condenser fans, an expansion device, and an evaporator with one or more associated evaporator fans, which are connected via appropriate refrigerant lines in a closed refrigerant flow circuit. Air or an air/gas mixture is drawn from the interior volume of the cargo space by means of the evaporator fan(s) associated with the evaporator, passed through the airside of the evaporator in heat exchange relationship with refrigerant whereby the refrigerant absorbs heat from the air, thereby cooling the air. The cooled air is then supplied back to the cargo space.

[0005] Developing countries often do not have large refrigerated vehicles with refrigerated trailers due to either lack of infrastructure or crowded urban environments that simply cannot fit such large vehicles. Often perishable goods are delivered by auto rickshaws or small trucks that are powered by a compressed gas, such as for example, compressed natural gas or propane. Auto rickshaws are typically three-wheeler vehicles with enough room for a driver in the front in a few passengers and/or cargo in the back. Such auto rickshaws often serve as a primary means of transportation in many developing countries.

For example, auto rickshaws may include vehicles such as tuk-tuks. The small size of a tuk-tuk makes it an ideal vehicle to maneuver through crowded narrow streets, however most tuk-tuks lack refrigeration systems. The tuk-tuk is typically too small and lacks the power to carry or drive a refrigeration system having a large compressor, thus a smaller refrigeration system is desired.

BRIEF DESCRIPTION OF THE DISCLOSURE

[0006] According to one embodiment, a transport refrigeration system is provided. The transport refrigeration system comprises a vehicle having a refrigerated cargo space; a compressed gas tank configured to store gas; an engine configured to power the vehicle through combustion of the gas; and a pressure reducing mechanism fluidly connecting the compressed gas tank and the engine. The pressure reducing mechanism configured to reduce the pressure of the gas from the compressed gas tank. The transport refrigeration system also comprises an evaporator thermally coupled to the pressure reducing mechanism and the refrigerated cargo space. The evaporator is configured to cool the refrigerated cargo space. A temperature of the gas and a temperature of the evaporator are reduced as a result of the reduction in pressure of the gas by the pressure reducing mechanism.

[0007] In addition to one or more of the features described above, or as an alternative, further embodiments of the transport refrigeration system may include that the evaporator is fluidly connected to the pressure reducing mechanism and the engine. The gas flows from pressure reducing mechanism through the evaporator and into the engine.

[0008] In addition to one or more of the features described above, or as an alternative, further embodiments of the transport refrigeration system may include that the pressure reducing mechanism is composed of at least one expansion device.

[0009] In addition to one or more of the features described above, or as an alternative, further embodiments of the transport refrigeration system may include that the pressure reducing mechanism is composed of an ejector system. The ejector system comprising an ejector fluidly connected to the compressed gas tank and a flash tank fluidly connected to the evaporator and the engine.

[0010] In addition to one or more of the features described above, or as an alternative, further embodiments of the transport refrigeration system may include that the evaporator includes an evaporator inlet and an evaporator outlet. The flash tank being fluidly connected to the inlet of the evaporator. The ejector includes an ejector inlet and an ejector outlet. The

compressed gas tank and the evaporator outlet being fluidly connected to the ejector inlet. The ejector outlet is fluidly connected to the flash tank.

[0011] In addition to one or more of the features described above, or as an alternative, further embodiments of the transport refrigeration system may include that the flash tank provides liquid gas to the evaporator inlet and vapor gas to the engine.

[0012] In addition to one or more of the features described above, or as an alternative, further embodiments of the transport refrigeration system may include a fan configured to operatively pass air across the evaporator and into the refrigerated cargo space.

[0013] In addition to one or more of the features described above, or as an alternative, further embodiments of the transport refrigeration system may include that the gas is natural gas.

[0014] In addition to one or more of the features described above, or as an alternative, further embodiments of the transport refrigeration system may include that the gas is propane.

[0015] According to another embodiment, a method of operating a transport refrigeration system is provided. The method includes storing gas in a compressed gas tank; and powering a vehicle using an engine fluidly connected to the compressed gas tank through a pressure reducing mechanism. The pressure reducing mechanism configured to reduce the pressure of the gas from the compressed gas tank. The method also includes cooling a refrigerated cargo space using an evaporator thermally coupled to the pressure reducing mechanism and the refrigerated cargo space. A temperature of the gas and a temperature of the evaporator are reduced as a result of the reduction in pressure of the gas by the pressure reducing mechanism.

[0016] In addition to one or more of the features described above, or as an alternative, further embodiments of the method may include that the evaporator is fluidly connected to the pressure reducing mechanism and the engine. The gas flows from pressure reducing mechanism through the evaporator and into the engine.

[0017] In addition to one or more of the features described above, or as an alternative, further embodiments of the method may include that the pressure reducing mechanism is composed of at least one expansion device.

[0018] In addition to one or more of the features described above, or as an alternative, further embodiments of the method may include that the pressure reducing mechanism is composed of an ejector system. The ejector system comprising an ejector fluidly connected to the compressed gas tank and a flash tank fluidly connected to the evaporator and the engine.

[0019] In addition to one or more of the features described above, or as an alternative, further embodiments of the method may include that the evaporator includes an evaporator inlet and an evaporator outlet. The flash tank being fluidly connected to the inlet of the evaporator. The ejector includes an ejector inlet and an ejector outlet. The compressed gas tank and the evaporator outlet being fluidly connected to the ejector inlet. The ejector outlet is fluidly connected to the flash tank.

[0020] In addition to one or more of the features described above, or as an alternative, further embodiments of the method may include that the flash tank provides liquid gas to the evaporator inlet and vapor gas to the engine.

[0021] In addition to one or more of the features described above, or as an alternative, further embodiments of the method may include operatively passing, using a fan, air across the evaporator and into the refrigerated cargo space.

[0022] In addition to one or more of the features described above, or as an alternative, further embodiments of the method may include that the gas is natural gas.

[0023] In addition to one or more of the features described above, or as an alternative, further embodiments of the method may include that the gas is propane.

[0024] Technical effects of embodiments of the present disclosure providing cooling to a refrigerated container through the decompression of compressed gas and using the decompressed gas to fuel an engine to power a vehicle.

[0025] The foregoing features and elements may be combined in various combinations without exclusivity, unless expressly indicated otherwise. These features and elements as well as the operation thereof will become more apparent in light of the following description and the accompanying drawings. It should be understood, however, that the following description and drawings are intended to be illustrative and explanatory in nature and non-limiting.

BRIEF DESCRIPTION OF THE DRAWINGS

[0026] The subject matter which is regarded as the disclosure is particularly pointed out and distinctly claimed in the claims at the conclusion of the specification. The foregoing and other features and advantages of the disclosure are apparent from the following detailed description taken in conjunction with the accompanying drawings in which:

[0027] FIG. 1 is a schematic illustration of a transport refrigeration system incorporated on an auto rickshaw or small truck, according to an embodiment of the present disclosure;

[0028] FIG. 2 is an enlarged schematic illustration of the transport refrigeration system of FIG. 1, according to an embodiment of the present disclosure;

[0029] FIG. 3 is a schematic illustration of a transport refrigeration system incorporated on an auto rickshaw or small truck, according to an embodiment of the present disclosure; and

[0030] FIG. 4 is an enlarged schematic illustration of the transport refrigeration system of FIG. 3, according to an embodiment of the present disclosure.

DETAILED DESCRIPTION OF THE DISCLOSURE

[0031] Referring to FIGs. 1-4. FIG. 1 shows a schematic illustration of a transport refrigeration system 200a incorporated on an auto rickshaw 102, according to an embodiment of the present disclosure. FIG. 2 shows an enlarged schematic illustration of the transport refrigeration system 200a of FIG. 1, according to an embodiment of the present disclosure. FIG. 3 shows a schematic illustration of a transport refrigeration system 200b incorporated on an auto rickshaw 102, according to an embodiment of the present disclosure. FIG. 4 shows an enlarged schematic illustration of the transport refrigeration system 200b of FIG. 3, according to an embodiment of the present disclosure.

[0032] The transport refrigeration system 200a of FIGs. 1-2 is being illustrated as a small vehicle refrigeration system 100, as seen in FIG. 1. The small vehicle refrigeration system 100 includes a vehicle 102 having a transport container 106. In an embodiment, the vehicle 102 may be a small truck or an auto rickshaw such as, for example a tuk-tuk. The vehicle 102 includes an operator's compartment or cab 104 and an engine 150 which acts as the drive system of the small vehicle refrigeration system 100. The transport container 106 is coupled to the vehicle 102. The transport container 106 is a refrigerated trailer and includes a top wall 108, a directly opposed bottom wall 110, opposed side walls 112, and a front wall 114, with the front wall 114 being closest to the vehicle 102. The transport container 106 further includes a door or doors 117 at a rear wall 116, opposite the front wall 114. The walls of the transport container 106 define a refrigerated cargo space 119, as shown in FIGs. 1 and 3.

[0033] The gas (i.e. fuel) that powers the engine 150 may be a pressurized gas, for example such as compressed natural gas, propane, or any other pressurized gas known to one of skill in the art. In an embodiment, the gas is compressed natural gas. In another embodiment, the gas is propane. In the illustrated embodiment, the compressed gas to power

the engine 150 of the vehicle 102 is stored in a compressed gas tank 220. The engine 150 may be configured to power the vehicle 102 through combustion of the gas.

[0034] Transport refrigeration systems 200a and transport refrigeration systems 200b may be used to transport and distribute perishable goods and environmentally sensitive goods (herein referred to as perishable goods 118). The perishable goods 118 may include but are not limited to fruits, vegetables, grains, beans, nuts, eggs, dairy, seed, flowers, meat, poultry, fish, ice, blood, pharmaceuticals, or any other suitable cargo requiring refrigerated transport. The perishable goods 118 are stored in the refrigerated cargo space 119, as seen in FIGs. 1 and 3.

[0035] The transport refrigeration system 200a of FIGs. 1 and 2 comprises: a compressed gas tank 220; an expansion device 230 fluidly connected to the compressed gas tank 220, an evaporator 240 fluidly connected to the expansion device 230; and an engine 150 fluidly connected to the evaporator 240. The compressed gas tank 220 is configured to store compressed gas. The expansion device 230 is fluidly connected to the compressed gas tank 220 through a tank line 224. The evaporator 240 is fluidly connected to the expansion device 230 at the evaporator inlet 242 through an evaporator line 232. The engine 150 is fluidly connected to the evaporator 240 at the evaporator outlet 244 through engine line 154. In an embodiment, the evaporator 240 is thermally coupled to the expansion device 230 and the refrigerated cargo space 119.

[0036] The gas from the compressed gas tank 220 must then be decompressed to a low pressure to be consumable by the engine 150. For instance, commonly many tanks store compressed natural gas at around 3600 PSI and then the compressed natural gas must be decompressed to less than about 100 PSI for viable use in natural gas engines. The expansion device 230 is configured to depressurize the compressed gas from the compressed gas tank 220 to an operable pressure suitable for consumption by the engine 150. The expansion device 230 may be composed of a single expansion device or a series of multiple expansion devices. Heat is released during the compression process of the gas, while conversely heat is absorbed during the decompression process. So the decompression process through the expansion device 230 will lower the temperature of the gas and subsequently the evaporator 240 temperature as well. Thus, reduced temperature of the evaporator 240 provides cooling to the refrigerated cargo space 119. The cooling may be provided to the refrigerated cargo space 119 through thermal conduction or convection. The transport refrigeration system 200a may include a fan 250 to aid in the convection cooling process. The fan 250 is operative to pass air across the evaporator 240 and cool the refrigerated cargo space 119. The

fan 250 may be powered by various methods including but not limited to a battery, a generator, and/or solar panels. The fan may also be spun by a turbine powered by the flow and/or decompression of the gas from the compressed gas tank 220.

[0037] The transport refrigeration system 200b of FIGs. 3-4 is similar to the transport refrigeration system 200a of FIGs. 1-2; however the expansion device 230 of FIGs. 1-2 is replaced by an ejector system 259 in FIGs. 3-4. The transport refrigeration system 200b of FIGs. 3 and 4 comprises: a compressed gas tank 220; an ejector 260 fluidly connected to the compressed gas tank 220, a flash tank 270 fluidly connected to the ejector 260, an evaporator 240 fluidly connected to the flash tank 270 and fluidly connected to the ejector 260; and an engine 150 fluidly connected to the flash tank 270. The compressed gas tank 220 is configured to store compressed gas. In an embodiment, the evaporator 240 is thermally coupled to the ejector system 259 and the refrigerated cargo space 119.

[0038] The ejector 260 includes an ejector inlet 264 and an ejector outlet 268. The ejector inlet 264 of the ejector 260 is fluidly connected to the compressed gas tank 220 through a tank line 222. The flash tank 270 is fluidly connected to the ejector outlet 268 of the ejector through an ejector line 262. The evaporator 240 includes an evaporator inlet 242 and an evaporator outlet 244. The evaporator inlet 242 of the evaporator 240 is fluidly connected to the flash tank 270 to the through a liquid line 272. The evaporator outlet 244 of the evaporator 240 is fluidly connected to the ejector inlet 264 of the ejector 260 through the ejector return line 248. The engine 150 is fluidly connected to the flash tank 270 through a vapor engine line 152.

[0039] The ejector system 259 is composed of the ejector 260 and the flash tank 270. Both the expansion device 230 and the ejector system 259 serve as a pressure reducing mechanism configured to reduce the pressure of the gas but accomplish the pressure reduction in different ways. The expansion device 230 of FIGs. 1-2 may be a valve or a series of valves that serve to reduce the pressure of the gas. Whereas the ejector 260 of FIGs. 3-4 reduces the pressure of the compressed gas and separates the gas into a liquid 276 and a vapor 274, both cooled from the decompression process in the ejector. The cooled liquid 276 will travel through the evaporator 240 to cool 240 and thus cool the refrigerated cargo space 119 as well. Once through the evaporator 240 and out the evaporator outlet 244, the liquid 276 will re-enter the ejector inlet 262 and travel through the ejector 260 again, as shown in FIGs. 3 and 4. The vapor 274 will travel to the engine 150 to be consumed.

[0040] The decompression process through the ejector 260 will lower the temperature of the gas and subsequently the evaporator 240 temperature as well. Thus, a reduced

temperature of the evaporator 240 provides cooling to the refrigerated cargo space 119. The cooling may be provided to the refrigerated cargo space 119 through thermal conduction or convection. The transport refrigeration system 200b may include a fan 250 to aid in the convection cooling process. The fan 250 is operative to pass air across the evaporator 240 and cool the refrigerated cargo space 119. The fan 250 may be powered by various methods including but not limited to a battery, a generator, and/or solar panels. The fan may also be spun by a turbine powered by the flow and/or decompression of the gas from the compressed gas tank 220.

[0041] The transport refrigeration system 200a and the transport refrigeration system 200b may also include a controller (not shown) configured for controlling operation of the transport refrigeration system 200 including, but not limited to, operation of various components of the refrigerant unit 22 to provide and maintain a desired thermal environment within the refrigerated cargo space 119. The controller may also be able to selectively control the release of compressed gas from the compressed gas tank 220. The release of gas may be based on the requirements of the engine 150 and the transport refrigeration system (transport refrigeration system 200a or 200b). The controller may be an electronic controller including a processor and an associated memory comprising computer-executable instructions that, when executed by the processor, cause the processor to perform various operations. The a processor may be but is not limited to a single-processor or multi-processor system of any of a wide array of possible architectures, including field programmable gate array (FPGA), central processing unit (CPU), application specific integrated circuits (ASIC), digital signal processor (DSP) or graphics processing unit (GPU) hardware arranged homogenously or heterogeneously. The memory may be a storage device such as, for example, a random access memory (RAM), read only memory (ROM), or other electronic, optical, magnetic or any other computer readable medium.

[0042] Advantageously, using the decompression process of compressed gas provides cooling to a refrigerated cargo space, while avoiding the complexity and large volumetric requirements of a compressor based refrigeration system.

[0043] While the disclosure has been described in detail in connection with only a limited number of embodiments, it should be readily understood that the disclosure is not limited to such disclosed embodiments. Rather, the disclosure can be modified to incorporate any number of variations, alterations, substitutions or equivalent arrangements not heretofore described, but which are commensurate with the spirit and scope of the disclosure. Additionally, while various embodiments of the disclosure have been described, it is to be

understood that aspects of the disclosure may include only some of the described embodiments. Accordingly, the disclosure is not to be seen as limited by the foregoing description, but is only limited by the scope of the appended claims.

CLAIMS:

What is claimed is:

1. A transport refrigeration system comprising:

a vehicle having a refrigerated cargo space;

a compressed gas tank configured to store gas;

an engine configured to power the vehicle through combustion of the gas;

a pressure reducing mechanism fluidly connecting the compressed gas tank and the engine, the pressure reducing mechanism configured to reduce the pressure of the gas from the compressed gas tank;

an evaporator thermally coupled to the pressure reducing mechanism and the refrigerated cargo space;

wherein the evaporator is configured to cool the refrigerated cargo space; and

wherein a temperature of the gas and a temperature of the evaporator are reduced as a result of the reduction in pressure of the gas by the pressure reducing mechanism.

2. The transport refrigeration system of claim 1, wherein:

the evaporator is fluidly connected to the pressure reducing mechanism and the engine, wherein the gas flows from pressure reducing mechanism through the evaporator and into the engine.

3. The transport refrigeration system of claim 2, wherein:

the pressure reducing mechanism is composed of at least one expansion device.

4. The transport refrigeration system of claim 1, wherein:

the pressure reducing mechanism is composed of an ejector system, the ejector system comprising an ejector fluidly connected to the compressed gas tank and a flash tank fluidly connected to the evaporator and the engine.

5. The transport refrigeration system of claim 4, wherein:

the evaporator includes an evaporator inlet and an evaporator outlet, the flash tank being fluidly connected to the inlet of the evaporator; and

the ejector includes an ejector inlet and an ejector outlet, the compressed gas tank and the evaporator outlet being fluidly connected to the ejector inlet, wherein the ejector outlet is fluidly connected to the flash tank.

6. The transport refrigeration system of claim 5, wherein:

the flash tank provides liquid gas to the evaporator inlet and vapor gas to the engine.

7. The transport refrigeration system of claim 1, further comprising:

a fan configured to operatively pass air across the evaporator and into the refrigerated cargo space.

8. The transport refrigeration system of claim 1, wherein:

the gas is natural gas.

9. The transport refrigeration system of claim 1, wherein:

the gas is propane.

10. A method of operating a transport refrigeration system, the method comprising:

storing gas in a compressed gas tank;

powering a vehicle using an engine fluidly connected to the compressed gas tank through a pressure reducing mechanism, the pressure reducing mechanism configured to reduce the pressure of the gas from the compressed gas tank;

cooling a refrigerated cargo space using an evaporator thermally coupled to the pressure reducing mechanism and the refrigerated cargo space; and

wherein a temperature of the gas and a temperature of the evaporator are reduced as a result of the reduction in pressure of the gas by the pressure reducing mechanism.

11. The method of claim 10, wherein:

the evaporator is fluidly connected to the pressure reducing mechanism and the engine, wherein the gas flows from pressure reducing mechanism through the evaporator and into the engine.

12. The method of claim 11, wherein:

the pressure reducing mechanism is composed of at least one expansion device.

13. The method of claim 10, wherein:

the pressure reducing mechanism is composed of an ejector system, the ejector system comprising an ejector fluidly connected to the compressed gas tank and a flash tank fluidly connected to the evaporator and the engine.

14. The method of claim 13, wherein:

the evaporator includes an evaporator inlet and an evaporator outlet, the flash tank being fluidly connected to the inlet of the evaporator; and

the ejector includes an ejector inlet and an ejector outlet, the compressed gas tank and the evaporator outlet being fluidly connected to the ejector inlet, wherein the ejector outlet is fluidly connected to the flash tank.

15. The method of claim 14, wherein:

the flash tank provides liquid gas to the evaporator inlet and vapor gas to the engine.

16. The method of claim 10, further comprising:

operatively passing, using a fan, air across the evaporator and into the refrigerated cargo space.

17. The method of claim 10, wherein:

the gas is natural gas.

18. The method of claim 10, wherein:

the gas is propane.

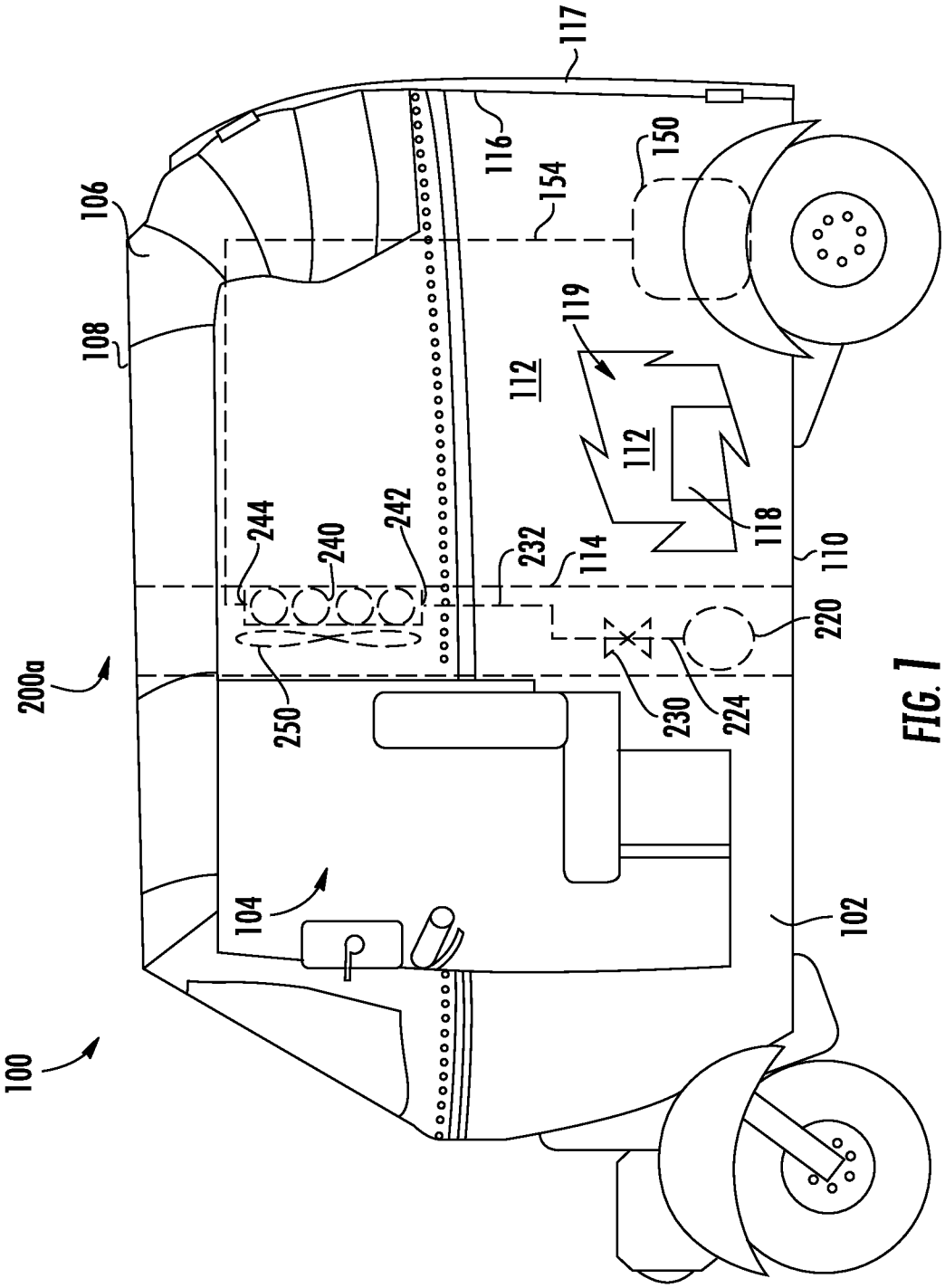
100
200a
104
250
244
240
242
232
230
224
220
114
112
112
118
119
110
102
108
106
154
116
117
150

FIG. 1

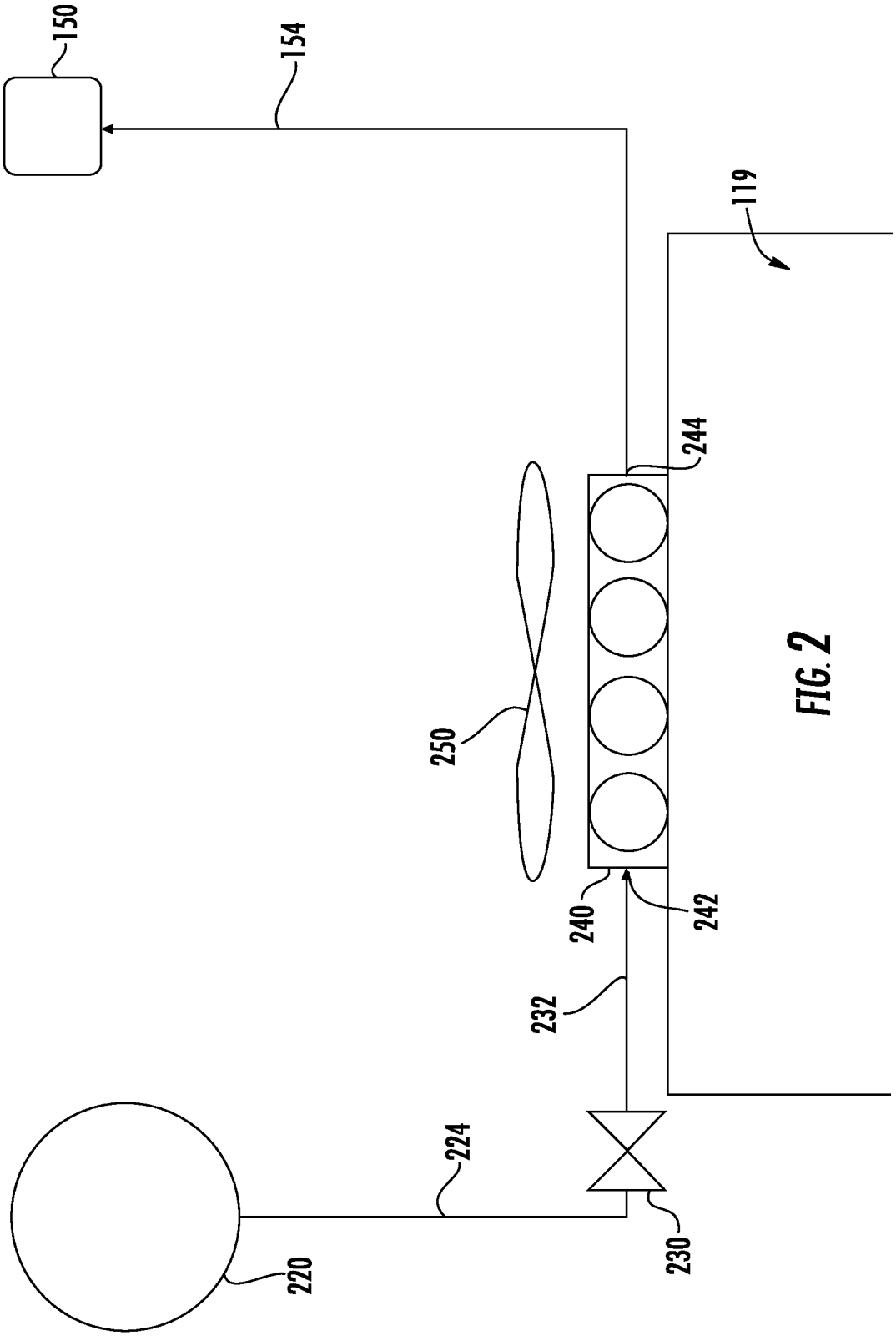

FIG. 2

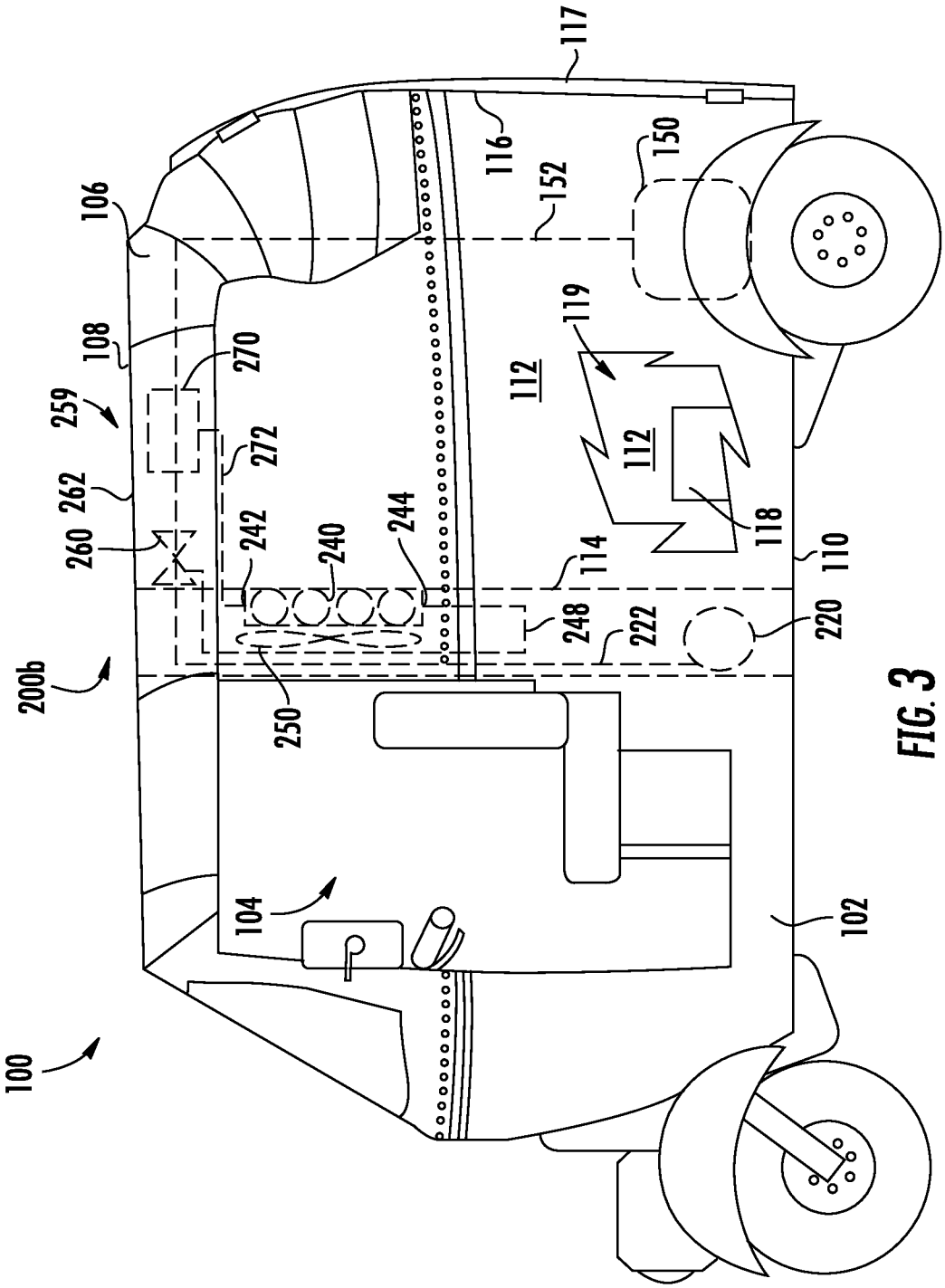
100
200b
259
260
262
106
108
270
272
242
240
244
250
104
112
119
112
118
114
248
222
220
116
152
150
117
110
102

FIG. 3

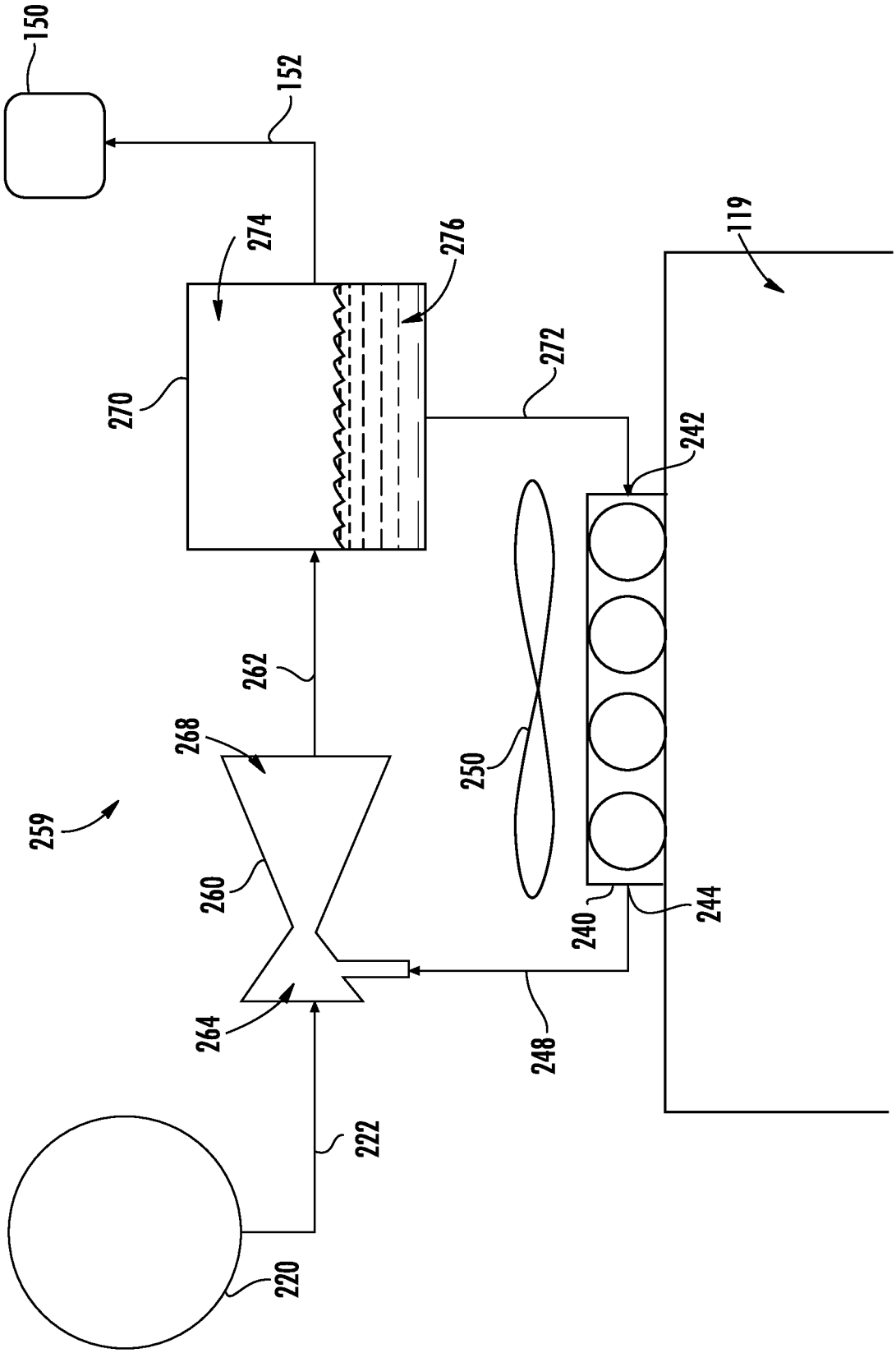
150
152
274
276
270
272
119
242
262
268
250
259
260
240
244
264
248
222
220

FIG. 4

INTERNATIONAL SEARCH REPORT

International application No
PCT/US2017/030615

A. CLASSIFICATION OF SUBJECT MATTER

INV. B60H1/00 B60H1/32 F02M21/02 F02M21/06 F25B19/00
B60P3/20
ADD.

According to International Patent Classification (IPC) or to both national classification and IPC

B. FIELDS SEARCHED

Minimum documentation searched (classification system followed by classification symbols)

B60H F02M F25B B60P

Documentation searched other than minimum documentation to the extent that such documents are included in the fields searched

Electronic data base consulted during the international search (name of data base and, where practicable, search terms used)

EPO-Internal, WPI Data

C. DOCUMENTS CONSIDERED TO BE RELEVANT

Category*	Citation of document, with indication, where appropriate, of the relevant passages	Relevant to claim No.
X	DE 195 31 122 A1 (MESSER GRIESHEIM GMBH [DE]) 27 February 1997 (1997-02-27) column 2, line 9 - column 3, line 20; figures -----	1-3, 7-12, 16-18
X	CN 103 496 311 B (JIANGSU HUAMAI GAS EQUIPMENT SALES CO LTD) 17 February 2016 (2016-02-17) figures -----	1-3, 7-12, 16-18
X	JP S41 7284 Y1 (UNKWON) 14 April 1966 (1966-04-14) the whole document -----	1-3, 7-12, 16-18

-/--

[X] Further documents are listed in the continuation of Box C.

[X] See patent family annex.

* Special categories of cited documents :

"A" document defining the general state of the art which is not considered to be of particular relevance

"E" earlier application or patent but published on or after the international filing date

"L" document which may throw doubts on priority claim(s) or which is cited to establish the publication date of another citation or other special reason (as specified)

"O" document referring to an oral disclosure, use, exhibition or other means

"P" document published prior to the international filing date but later than the priority date claimed

"T" later document published after the international filing date or priority date and not in conflict with the application but cited to understand the principle or theory underlying the invention

"X" document of particular relevance; the claimed invention cannot be considered novel or cannot be considered to involve an inventive step when the document is taken alone

"Y" document of particular relevance; the claimed invention cannot be considered to involve an inventive step when the document is combined with one or more other such documents, such combination being obvious to a person skilled in the art

"&" document member of the same patent family

Date of the actual completion of the international search	Date of mailing of the international search report
20 July 2017	03/08/2017

Name and mailing address of the ISA/	Authorized officer
European Patent Office, P.B. 5818 Patentlaan 2 NL - 2280 HV Rijswijk Tel. (+31-70) 340-2040, Fax: (+31-70) 340-3016	Endrizzi, Silvio

1

INTERNATIONAL SEARCH REPORT

International application No
PCT/US2017/030615

C(Continuation). DOCUMENTS CONSIDERED TO BE RELEVANT

Category*	Citation of document, with indication, where appropriate, of the relevant passages	Relevant to claim No.
X	WO 2015/011581 A1 (GAVRYLOV ROLAND VOLODYMYROVYCH [UA]; GAVRYLOV VOLODYMYR ROLANDOVYCH [U) 29 January 2015 (2015-01-29) paragraph [0040] - paragraph [0049]; figures -----	1,7-10, 16-18
X	CN 201 907 386 U (UNIV TIANJIN COMMERCE) 27 July 2011 (2011-07-27) figures -----	1,7-10, 16-18
A	GB 2 182 766 A (LEE KHIM NIK) 20 May 1987 (1987-05-20) claim 2; figures -----	1-18

1

INTERNATIONAL SEARCH REPORT

Information on patent family members

International application No
PCT/US2017/030615

Patent document cited in search report	Publication date	Patent family member(s)	Publication date
DE 19531122 A1	27-02-1997	DE 19531122 A1	27-02-1997
		EP 0788908 A2	13-08-1997
CN 103496311 B	17-02-2016	NONE	
JP S417284 Y1	14-04-1966	NONE	
WO 2015011581 A1	29-01-2015	UA 107877 C2	25-02-2015
		WO 2015011581 A1	29-01-2015
CN 201907386 U	27-07-2011	NONE	
GB 2182766 A	20-05-1987	NONE	