Aug. 24, 1943. W. F. PUNTE 2,327,454

PADLESS CROWN CAP

Filed Nov. 2, 1939

Fig. 2.

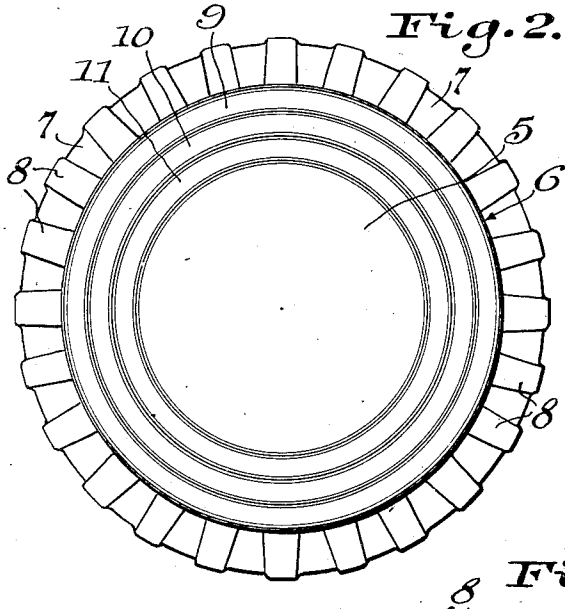

Fig. 1.

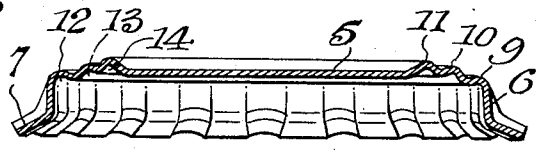

Fig. 9.

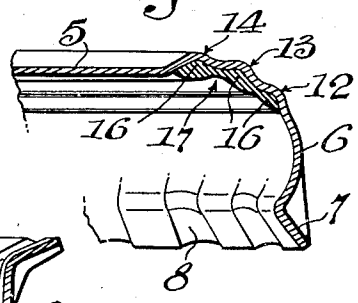

Fig. 3.

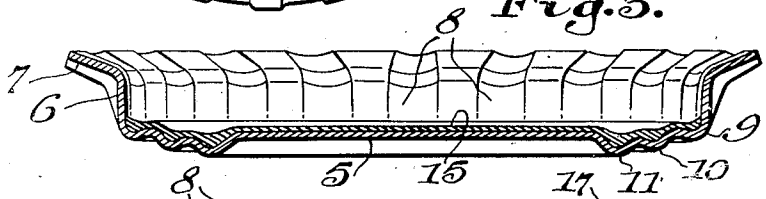

Fig. 4.

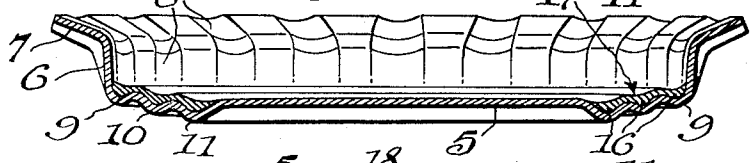

Fig. 5.

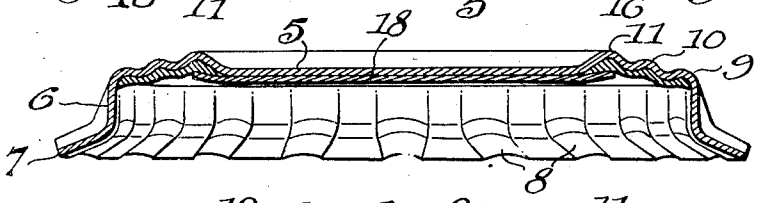

Fig. 6.

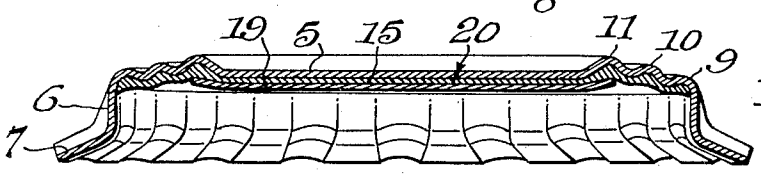

Fig. 7.

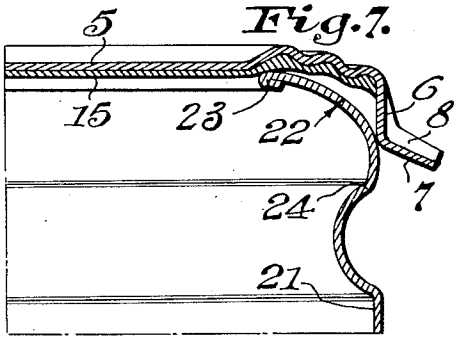

Fig. 8.

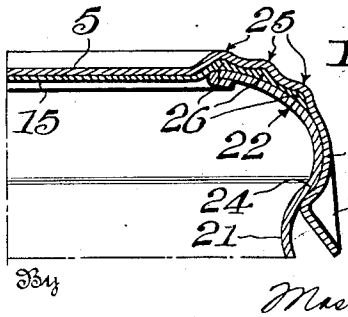

Inventor
W. F. Punte
By
Mason & Porter
Attorneys

Patented Aug. 24, 1943

2,327,454

UNITED STATES PATENT OFFICE

2,327,454

PADLESS CROWN CAP

William F. Punte, Syracuse, N. Y., assignor to Continental Can Company, Inc., New York, N. Y., a corporation of New York

Application November 2, 1939, Serial No. 302,600

6 Claims. (Cl. 215—39)

The invention relates generally to container sealing or closure devices and primarily seeks to provide a novel form of crown cap closure capable of effecting a satisfactory liquid and gas tight seal without inclusion of the usual cork or similar yieldable sealing pads.

Crown caps having crown or body portions and depending, crimped skirt portions adapted to be bent into intimate contact with neck portions of bottles, cans or similar containers for effecting a sealing attachment are well known, but in the conventional forms of such caps it is necessary to include sealing pads of cork or similar yieldable material. In addition, it has been found desirable to cover the cork pads with center spots in order to avoid direct contact between beverages in the containers and the cork, or the metal of the caps through small openings in the cork. Obviously, the inclusion of cork pads and center spots of aluminum or treated paper adds materially to the manufacturing cost of the caps, and the provision of a crown cap such as is herein disclosed and which is capable of effecting a proper liquid and gas tight seal without inclusion of sealing pads and center spots will not only materially decrease the cost of manufacturing the caps but will also materially decrease the amount of metal necessary to be used since the cap skirts can be made much shorter.

An object of the invention is to provide a novel form of crown cap including a crown or body portion and a depending crimped skirt, that portion of the cap which is presented for sealing contact with a container mouth portion embodying at least one upstanding annular bead or corrugation having a sealing compound therein and adapted when the cap is secured upon a container neck to be partially flattened out to thereby place the sealing compound in the corrugation under tight sealing compression.

Another object of the invention is to provide a cap of the character stated in which the corrugation equipment is resilient so that upon application of the cap to a container neck, cap body and skirt portions will be placed under tension and held under tension in a manner for more efficiently retaining the sealed condition of a container.

Another object of the invention is to provide a cap of the character stated in which the sealing compound is tasteless and odorless and is applied not only to the area in which the annular corrugations or grooves are formed but also over the inner central or body portion of the cap so as to separate the metal of the cap from the contained beverage or other product.

Another object of the invention is to provide a cap of the character stated in which a center spot is applied over the central or body portion of the cap and over a portion of the groove filling sealing compound, said spot being caused to adhere directly to the metal cap within the annular ring of sealing compound, or over the central body film of sealing compound accordingly as the cap is made with or without said central body film portion.

With the above and other objects in view that will hereinafter appear, the nature of the invention will be more fully understood by following the detailed description, the appended claims, and the several views illustrated in the accompanying drawing.

In the drawing:

Figure 1 is a central vertical cross section illustrating the improved crown cap following formation of it by the forming die and before application of the sealing compound thereto.

Figure 2 is a plan view of the cap structure shown in Figure 1.

Figure 3 is an enlarged central vertical cross section of the cap shown in Figure 1 with the sealing compound applied to the whole of the crown portion of the cap.

Figure 4 is a view similar to Figure 3 and illustrates a cap in which the sealing compound is applied over the grooved portion only of the cap crown inner surface.

Figure 5 is an enlarged central vertical cross section of the cap of Figure 4 with a center spot affixed thereto.

Figure 6 is an enlarged central vertical cross section of the cap of Figure 3 with a center spot affixed thereto.

Figure 7 is an enlarged fragmentary central vertical section illustrating the cap of Figure 4 loosely applied to a container neck portion.

Figure 8 is a view similar to Figure 7 showing the finally sealed condition of the cap.

Figure 9 is an imaginary central vertical section of the cap showing the corrugations deformed as in Figure 8 and illustrating the position the sealing compound would assume under this condition if not compressed against the sealing surfaces of a container.

The improved crown cap structure herein disclosed is preferably formed in the usual manner from resilient sheet metal and includes a central crown or body portion 5 surrounded by a depending skirt 6 which terminates at its lower edge

in an outwardly flared portion 7 and is crimped in the usual manner as at 8.

An annular portion of the crown 5 just inside the skirt, or in other words, that portion of the crown which is to oppose sealing surfaces of the bottle or can neck portion, has formed therein one or more annular corrugations subject to deformation by partial flattening. In this specific disclosure three such corrugations 9, 10 and 11 are shown, and these are arranged in concentric relation with the outer terminus of the corrugations 9 merging directly into the skirt 6. It is to be understood that a greater or lesser number of these corrugations can be employed. The corrugations arranged specifically as herein described provide three concentric grooves 12, 13 and 14 at the inner surface of the cap crown.

One of the outstanding purposes of the present invention is to provide a cap which will form a satisfactory liquid and gas type seal without inclusion of the usual space consuming and otherwise objectionable sealing pad insert of cork or other yieldable material. To this end, a sealing compound of any suitable tasteless and odorless plastic material is applied by pouring, spraying, or in any other suitable manner, over the whole of the interior surface of the crown or central body portion 5, the coating being permitted to substantially fill each of the concentric grooves 12, 13 and 14. That portion of the sealing compound overlying the crown 5 within the innermost groove 14 is in the form of a relatively thin film 15, and the portions of the compound forming relatively thick ring-like enlargements substantially filling the grooves 12, 13 and 14 are designated 16.

In Figure 4 of the drawing there is illustrated a cap structure in which only the grooved annular portion of the crown 5 is provided with the sealing compound coating. In this form of the invention the coated annulus is designated 17 and the grooves are filled in the same manner as hereinbefore described. It will be noted that the portion of the crown 5 inwardly of the innermost groove 14 is devoid of any sealing compound coating.

When caps formed as in Figure 3 are employed the central film coating 15 will separate the contents of the container from the metal of the cap and prevent objectionable contact of said metal and contents. When a cap of the form illustrated in Figure 4 is used, it may be found desirable to provide a center spot 18 of aluminum foil or treated paper, and such a spot may be caused to adhere directly to the non-coated surface of the crown 5 inwardly of the innermost groove 14 and may overlap the sealing compound coating to a certain extent as is clearly illustrated in Figure 5 of the drawing. It will be understood, of course, that an annulus of exposed sealing compound will be allowed to surround the peripheral limits of the spot to assure the desired efficient sealing contact of the sealing compound with the sealing surfaces of a container to be capped.

If desired, the centrally coated caps of the form illustrated in Figure 3 may also be provided with center spots 19, and in this case the spots will adhere directly to the central film 15 of sealing compound as at 20 and will overlap the portion of the compound overlying certain of the grooves in the manner previously described.

In each of these adaptations of the invention, it is unnecessary to provide the customary sealing pad of cork or other yieldable material, and for this reason the skirt portion of the improved cap can be made relatively short, thereby greatly economizing in the amount of metal necessary to be used in the manufacture of these caps.

In Figures 7 and 8 of the drawing I have illustrated the application of an improved crown cap of the type illustrated in Figure 3 of the drawing to the pouring throat or neck portion of a can. In Figure 7 the cap is shown loosely applied to the neck and not finally crimped into the sealing condition, and in Figure 8 the ultimately sealed condition of the cap is illustrated. In these figures the pouring neck of the can is indicated at 21 and the sealing surfaces of this neck portion are indicated at 22, the metal of the neck defining the pouring throat being inwardly turned in the usual manner as at 23 in order to avoid presentation of a raw metal edge.

In Figure 7 the corrugations 9, 10 and 11 of the loosely applied cap are in the normal condition illustrated in Figure 1. When the usual capping tool is brought down upon the cap, the cap is forced into sealing contact with the sealing surfaces 22 of the can neck, and as the skirt is tightly crimped under the anchoring point 24 of the neck, the corrugations 9, 10 and 11 will spread out or be deformed by a partial flattening thereof as at 25 in the manner clearly indicated in Figure 8. This partial flattening of the corrugations will cause the thick coatings 16 of sealing compound in the grooves 12, 13 and 14 to bulge out of said grooves into intimate contact with the sealing surface 22 of the crown neck. These coating portions 16 are thus formed into ring-like sealing areas 26 of major compression, and these locally compressed annuli serve to so effectively seal the mouth of the container that it is unnecessary to provide additional sealing means such as the usual cork pads. Actual practice has shown that containers sealed in this manner are able to satisfactorily sustain internal pressures of as much as 150 lbs. per square inch.

In Figure 9 an attempt is made to indicate the manner in which the relatively thick groove filling annuli 16 of sealing compound would bulge out when the corrugations are deformed as above described were said annular sealing areas not opposed by container sealing surfaces 22.

It will be obvious also that as the corrugations 9, 10 and 11 are deformed or partially flattened in the manner illustrated in Figure 8 and the cap fully crimped and anchored at the points 24, the whole cap will be placed under tension because of the resiliency of the metal in the corrugations and this retained tension will greatly facilitate the holding of the seal.

By reason of the provision and nature of projection of the corrugation 9, the crown or body portion 5 of the cap is centrally depressed and is disposed within the pouring mouth of the container in the manner best shown in Figures 5, 6 and 8 of the drawing. In this manner more perfect sealing of the container is provided for as in Figure 8, and when center spots are used, as in Figures 5 and 6, these spots will be depressed slightly within the mouth portions of the containers.

It is well known that the sealing surfaces of containers, particularly those made from glass, are more or less irregular, and considerable difficulty has been experienced in efficiently sealing such irregular surfaces. By providing a crown cap of the form herein disclosed in which a plurality of annular areas of major compression are set up by partial deformation of yieldable corrugations, perfect sealing of even irregular sur-

faces of the kind referred to is a comparatively easy matter.

It is of course to be understood that the details of structure and arrangement of parts may be variously changed and modified without departing from the spirit and scope of my invention.

I claim:

1. A metal closure cap for sealing the neck of a bottle, can or like container comprising a body portion and a depending container mouth gripping skirt portion, said body portion having at least one annular clearly defined corrugation forming a groove for opposing a container neck portion and narrower than said neck portion and having therein a relatively thin filler of sealing compound permanently adhered therein, said corrugation and the sealing compound permanently adhered therein being deformable by partial flattening out of said corrugation upon application of the cap to a container for compressing the sealing compound in sealing contact against the container neck portion and providing an area of maximum density of compression of the sealing compound at the position of said groove.

2. A metal closure cap for sealing the neck of a bottle, can or like container comprising a body portion and a depending container mouth gripping skirt portion, said body portion having at least one annular clearly defined corrugation forming a groove for opposing a container neck portion and narrower than said neck portion and having therein a relatively thin filler of sealing compound permanently adhered therein, said corrugation and the sealing compound permanently adhered therein being deformable by partial flattening out of said corrugation upon application of the cap to a container for compressing the sealing compound in sealing contact against the container neck portion and providing an area of maximum density of compression of the sealing compound at the position of said groove, said corrugation being resilient whereby it will tend to retain its initial shape and thereby hold the cap, when applied, under constant tension.

3. A crown cap comprising a crown or body portion and a depending crimped skirt, said body portion having a plurality of annular corrugations disposed just inside and merging into the skirt and forming annular grooves presented for opposition to sealing surfaces of a container neck portion, and a relatively thin annular ring of sealing compound permanently adhered in and substantially filling said grooves, said corrugations and said compound being deformable upon application of the cap to a container neck for stretching and compressing the groove contained portions of the sealing compound and causing it to spread out of said grooves and form localized annular ring portions of major compression.

4. A crown cap comprising a crown or body portion and a depending crimped skirt, said body portion having a plurality of annular corrugations disposed just inside the skirt and forming annular grooves presented for opposition to sealing surfaces of a container neck portion and which collectively are narrower than said neck portion, and an odorless and tasteless sealing compound relatively thinly applied and permanently adhered over the whole of the inner crown portion and over and substantially filling the grooves, said corrugations and said compound being deformable by partial flattening out of said corrugations upon application of the cap to a container neck for compressing the groove contained portions of the sealing compound and causing said sealing compound portions to form localized annular ring portions of major compression.

5. A metal closure cap for containers having a sealing seat and a holding shoulder, said cap including a body portion adapted to overlie the sealing seat and having a depending skirt crimped to provide fastening lugs adapted to be forced beneath the holding shoulder, said body portion of the cap in the region directly above said sealing seat being bent upwardly to provide an annular shallow groove on the inner face of the cap, and a plastic sealing material adapted to fill said groove and contact with the sealing seat when the cap is applied to the container, said groove when sealing pressure is applied to the cap being adapted to partially straighten out and force the sealing material into tight sealing contact with the seat, said holding lugs on the skirt being disposed so as to hold the cap in sealing engagement with the container with the metal forming said groove held under constant tension.

6. A closure cap for containers having a sealing lip and a holding shoulder, said cap including a body portion adapted to overlie the sealing lip of the container and having a depending skirt crimped to provide fastening lugs adapted to be forced beneath said holding shoulder, said body portion of the cap in the region directly above said sealing lip being upwardly shaped so as to provide an annular groove on the inner face thereof, and a plastic sealing material adapted to fill said groove and contact with the sealing lip when the cap is applied to the container, said fastening lugs being disposed in said skirt so that when forced underneath the holding shoulder on the container the metal forming the groove will be partially straightened out and held under constant tension so as to press said plastic sealing material into tight sealing contact with the lip of the container.

WILLIAM F. PUNTE.