United States Patent [19]

Buck

[11] **3,799,641**

[45] **Mar. 26, 1974**

[54] **COMBINED ASH TRAY AND COASTER**

[76] Inventor: **Tom E. Buck,** 3700 Cherry St., Bluffton, Ind. 71601

[22] Filed: **Dec. 27, 1971**

[21] Appl. No.: **212,117**

[52] **U.S. Cl.** **312/286,** 312/351

[51] **Int. Cl.** **A47b 81/00**

[58] **Field of Search** 131/231, 238, 241, 242; 312/286, 351, 352

[56] **References Cited**

UNITED STATES PATENTS

2,716,046	8/1955	Minturn	312/286
3,095,108	6/1963	McKenzie	131/242 X
1,924,730	8/1933	Wirth	131/241 X
2,300,026	10/1942	Visser	131/241 UX
D101,437	10/1936	Ball	131/242 UX
D185,111	5/1959	Yerace et al.	131/241 UX

Primary Examiner—James T. McCall

[57] **ABSTRACT**

A novelty device consisting of a combination ash tray and coaster for a drinking glass, so that it is ideal for use in places where people are relaxing while smoking and drinking; the device consisting of a thin case containing a drawer slidable outwardly of the case from either side, and the top of the case having a shallow circular depression upon which the drinking glass may be rested.

3 Claims, 3 Drawing Figures

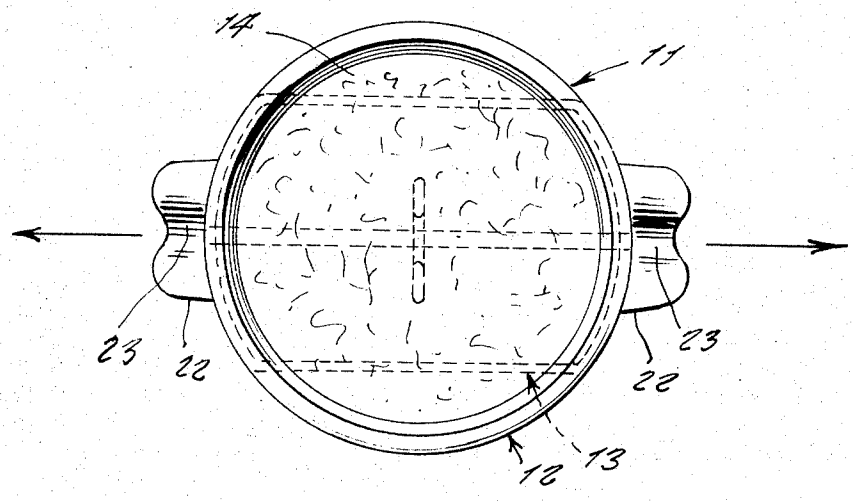

Fig. 1

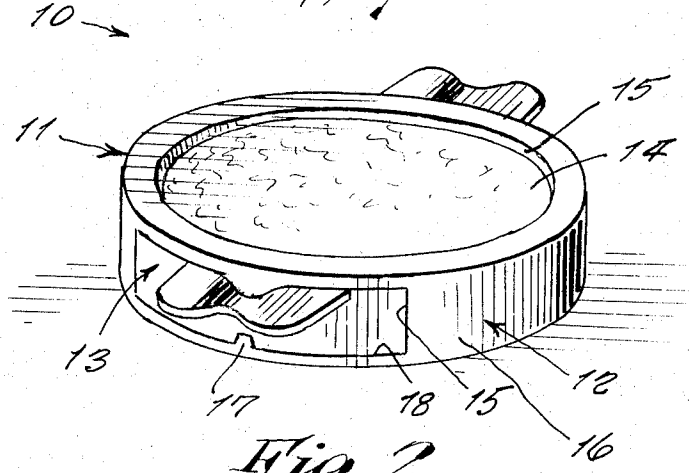

Fig. 2

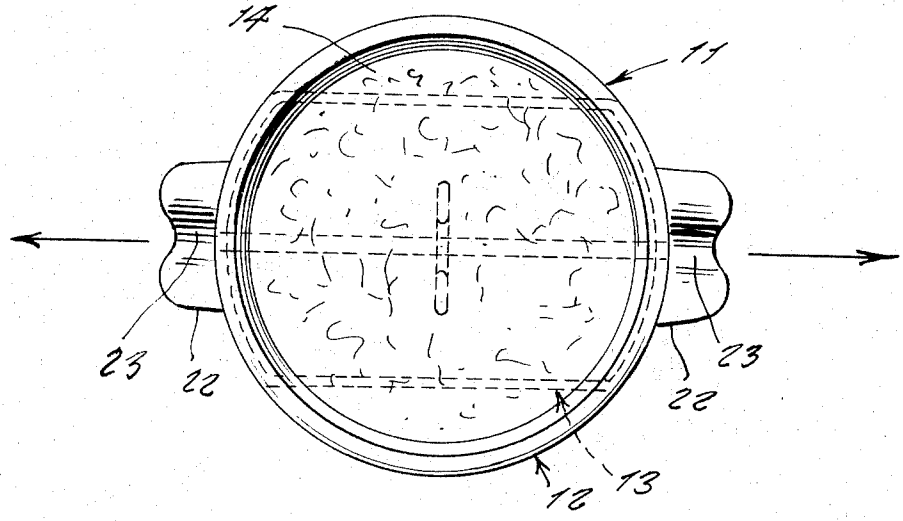

Fig. 3

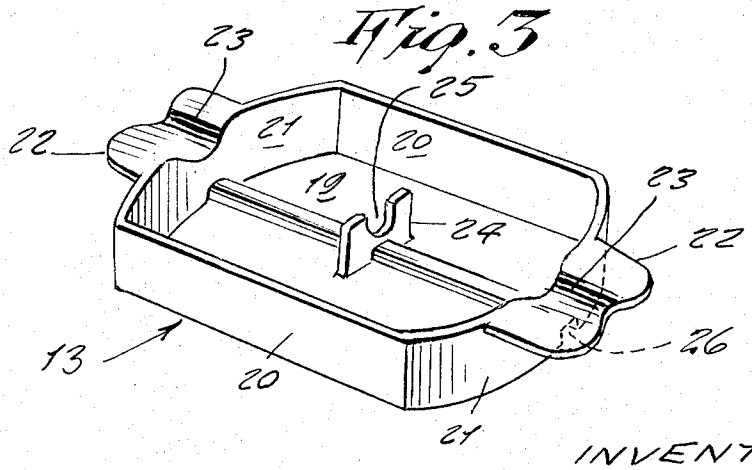

INVENTOR
TOM E. BUCK

COMBINED ASH TRAY AND COASTER

This invention relates generally to novelty items. More specifically it relates to bar accessories. A principle object of the present invention is to provide a novel ash tray and coaster formed as one unit.

Another object is to provide a combined ash tray and coaster which accordingly would be particularly adaptable for use wherever people sit down to relax to drink and smoke, such as at a liquor bar, or while watching television.

Another object is to provide a combined ash tray and coaster which would be particularly desirable for use where space is limited so that it cannot well handle a separate ash tray and a separate coaster, such as at a card table wherein the table surface may be cluttered with laid out playing cards, score pads and other game accessories.

Other objects are to provide a combined ash tray and coaster which is simple in design, inexpensive to manufacture, rugged in construction, easy to use and efficient in operation.

These and other objects will be readily apparent upon a study of the following specification and the accompanying drawing wherein:

FIG. 1 is a perspective view of the invention.

FIG. 2 is a top plan view thereof.

FIG. 3 is a perspective view of the ash tray shown alone.

Refering now to the drawing in detail, the reference numeral **10** represents a combined ash tray and coaster according to the present invention wherein there is an assembled unit **11** that consists of a relatively thin or low case **12** containing a slidable drawer **13**; the case serving as a coaster for placement of a drinking glass thereupon and the drawer when pulled outwardly serving as an ash tray.

The case **12** is preferably of circular shape in the conventional configuration of coasters, although it may be varied geometrically for modernistic decor to be square or any other desired shape. A shallow depression **14** is formed on the top of the case, so to form a low peripheral wall **15** around the depression, so to present a drinking glass place upon the device from sliding off. The case has an opening **15** in the side wall **16** thereof, the opening extending through opposite sides of the case and into which the drawer or ash tray is slidable. An upstanding central rib **17** may be formed longitudinally in the opening bottom wall **18** to guide sliding the drawer. The case can be made in any color and of any material such as plastic, glass, wood or the like, and the depression may be lined with a thin cork pad.

The drawer comprises a shallow vessel including bottom wall **19**, side walls **20** and opposite end walls **21** which are flush with the case side wall **16** when the drawer is in the case. Pull handles **22** projecting outward from the end walls include troughts **23** to form cigarette rests. An upstanding central tab **24** includes notch **25** that also serves as a cigarette rest. A longitudinal groove **26** on the underside of the bottom wall receives the rib **17**. The drawer likewise may be of any material and in any color.

The device may be made in any size.

In use, the drawer can be slided part way or fully out of the case, and when slided fully in, a smoldering cigarette butt in the tray can be snuffed out by lack of oxygen.

While various changes may be made in the detail construction, it is understood that such changes will be within the spirit and scope of the present invention.

I claim:

1. A combined coaster and ash tray comprising a circular case having spaced parallel circular top and bottom ends integrally combined with a peripheral cylindrical side wall, said top end having a recessed surface spaced equally from said side wall, said surface being adapted to serve as a coaster, an ash tray drawer slidably mounted in said case between said ends, said wall having at least one aperture adapted to receive slidably therethrough said drawer, wherein said drawer has an outer cylindrical surface of dimension curvature exactly equal to the aperture in said wall whereby said cylindrical surface is contiguous with said cylindrical wall when the drawer is fully enclosed in said case, said drawer including parallel spaced side walls integral with said outer cylindrical surface, said side walls being parallel to and symmetrical about the case diameter.

2. The combination of claim **1**, further including a notch along a diameter of the case and a co-acting longitudinal groove on the drawer, further including a handle projected outwardly from the drawer in axial alignment with the said notch and groove, whereby pulling radially outward on the handle will cause the drawer to slide radially outward of the case and parallel to the said notch.

3. The combination of claim **2**, wherein there are two aligned symmetrical apertures and the drawer has two symmetrical similar outer cylindrical surfaces each contiguous with the side wall of the case when the drawer is enclosed therein whereby the drawer can move radially outward to similar open positions on either side of the case.

* * * * *