No. 746,371. PATENTED DEC. 8, 1903.

J. PEJCHAR.

OBSERVATION CAR.

APPLICATION FILED MAR. 25, 1903.

NO MODEL. 2 SHEETS—SHEET 1.

FIG. 1.

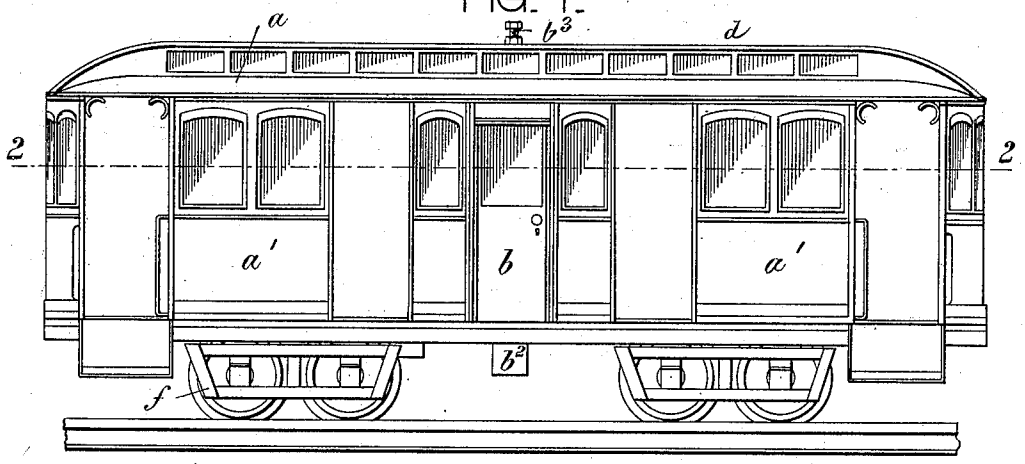

FIG. 2.

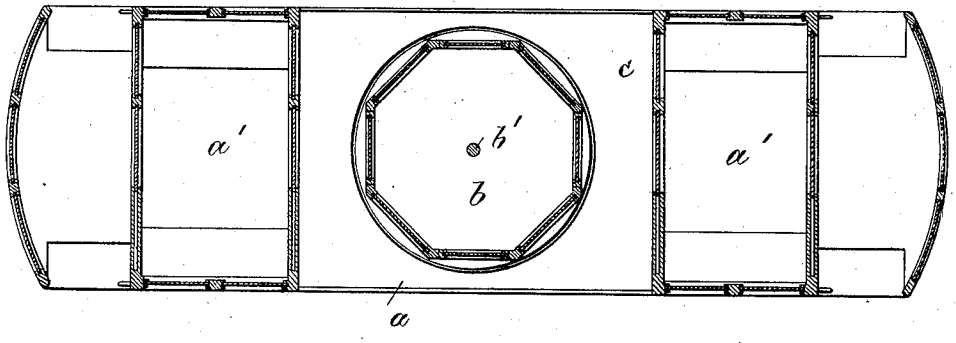

Witnesses:
Arthur Junge.
Edward Bay.

Inventor:
Josef Pejchar
by his attorney
Frank P. Briesen

THE NORRIS PETERS CO., PHOTO-LITHO., WASHINGTON, D. C.

No. 746,371. PATENTED DEC. 8, 1903.

J. PEJCHAR.

OBSERVATION CAR.

APPLICATION FILED MAR. 25, 1903.

NO MODEL. 2 SHEETS—SHEET 2.

FIG. 3.

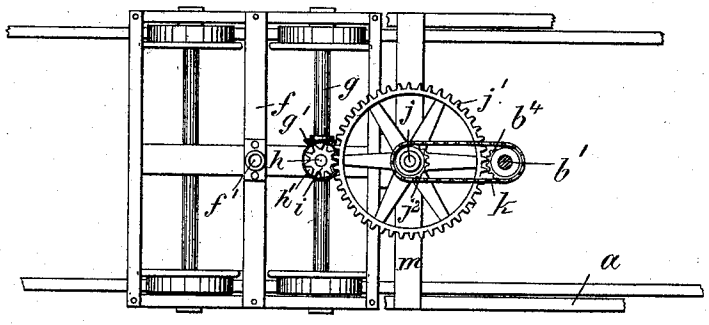

FIG. 4.

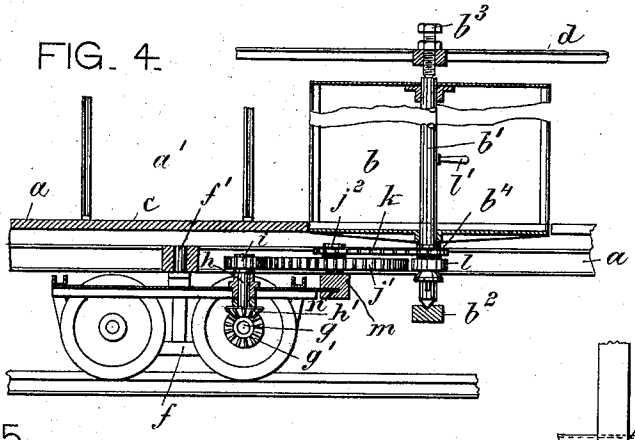

FIG. 5.

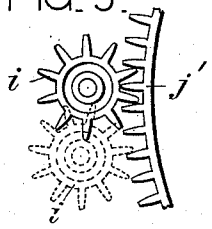

FIG. 6.

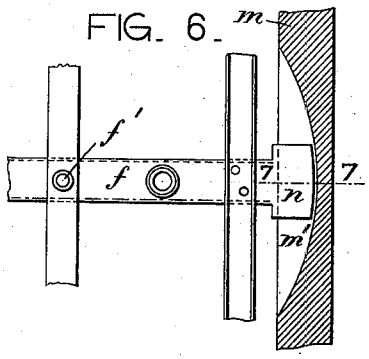

FIG. 7.

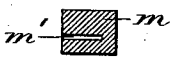

Witnesses:
Arthur Zimpel.
Edward Rang.

Inventor:
Josef Pejchar
by his attorney
Paul Bakewell

THE NORRIS PETERS CO., PHOTO-LITHO., WASHINGTON, D. C.

No. 746,371. Patented December 8, 1903.

UNITED STATES PATENT OFFICE.

JOSEF PEJCHAR, OF NEW YORK, N. Y.

OBSERVATION-CAR.

SPECIFICATION forming part of Letters Patent No. 746,371, dated December 8, 1903.

Application filed March 25, 1903. Serial No. 149,432. (No model.)

To all whom it may concern:

Be it known that I, JOSEF PEJCHAR, a citizen of Austria, residing at New York city, (Bronx,) county of Westchester, State of New York, have invented certain new and useful Improvements in Observation-Cars, of which the following is a specification.

This invention relates to an observation-car which is so constructed that the passengers may view freely the panorama along both sides of the road.

In the accompanying drawings, Figure 1 is a side elevation of my improved observation-car; Fig. 2, a horizontal section on line 2 2, Fig. 1; Fig. 3, a top view of the cage-operating mechanism; Fig. 4, a side view, partly in section, thereof; Fig. 5, a detail of the long-tooth wheels; Fig. 6, a detail of the sliding connection between car and truck; Fig. 7, a cross-section on line 7 7, Fig. 6.

The letter *a* represents the body of a car or carriage which I provide with a slowly rotatable cage *b* between floor and roof. The cage *b* is furnished with seats, doors, and windows and is otherwise adapted for the reception of passengers. The shaft *b'* of cage *b* is stepped into a bearing b^2 below the floor *c* and is engaged at its upper end by a set-screw b^3, projecting through the roof *d*. The drawings show the car to be provided with a single cage and with a state-room *a'* at each end; but obviously this arrangement may be modified at pleasure.

In order to insure a free view, the sides of the car should be open opposite the cage intermediate the state-rooms. The shaft *b'* of the cage is slowly rotated in the following manner: The axle *g* of truck *f* is by bevel-gear *g' h'* intergeared with shaft *h*, carrying long-toothed wheel *i*, Fig. 5. This wheel meshes into a long-toothed wheel *j'*, turning on stub-shaft *j* of car-body *a*. The shaft *j* drives the shaft *b'* either by being intergeared therewith or by means of the sprocket-wheels j^2 b^4 and chain *k*. The wheel b^4 is coupled to shaft *b'* by a clutch *l*, having handle *l'*, which is accessible from the interior of the cage, so that the rotating movement of the latter may be readily controlled.

The car *a* is provided with a transverse beam *m*, having a guide-slot *m'* concentric to the king-bolt *f'* of truck *f*. This slot is engaged by a slide or finger *n*, projecting radially from truck *f* and moving along the slot while the truck rounds a curve. The object of the slidable connection between truck and car is to always keep the parts at a uniform level and to thus prevent the wheel *i* from being lifted vertically out of engagement with wheel *j'*. The teeth of the wheels *i j'* are of such a length as to compensate for the additional distance between the shafts *h j* when the truck turns on the king-bolt, Fig. 5.

It will be seen that the passengers may enjoy a full view on both sides of the road by stepping, whenever desired, into the cage *b* of the observation-car. The invention is equally applicable to steam or electric cars.

What I claim is—

1. An observation-car provided with a rotatable cage, a truck, a beam on the car-body, a slide on the truck engaging the beam, and means for operatively connecting the car-axle with the cage, substantially as specfied.

2. An observation-car provided with a rotatable cage, a truck, a slotted beam on the car-body, a radial slide on the truck engaging the beam, and means for operatively connecting the car-axle with the cage, substantially as specified.

3. An observation-car provided with a rotatable cage, a truck, a long-toothed gear-wheel on the truck driven from the car-axle, an intermeshing gear-wheel on the car-body, means for operatively connecting said wheels with the cage, a radial slide on the truck, and a concentrically-grooved beam on the car-body engaged by said slide, substantially as specified.

Signed by me at New York city, (Manhattan,) New York, this 24th day of March, 1903.

JOSEF PEJCHAR.

Witnesses:
WILLIAM SCHULZ,
F. V. BRIESEN.