June 29, 1971 G. FARAGO 3,588,961

ADJUSTABLE SELF-LOCKING BUNDLING STRAPS

Filed Sept. 18, 1969 4 Sheets-Sheet 1

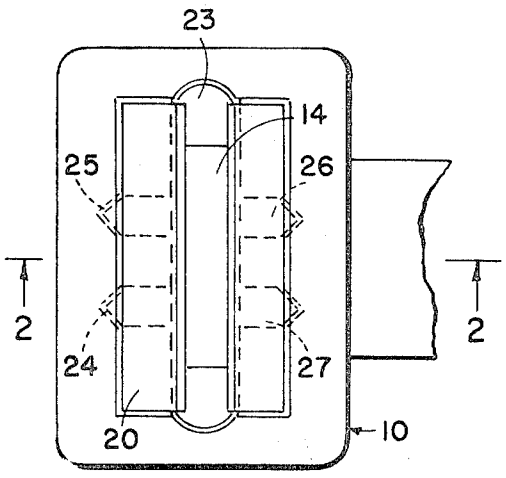

FIG. 1

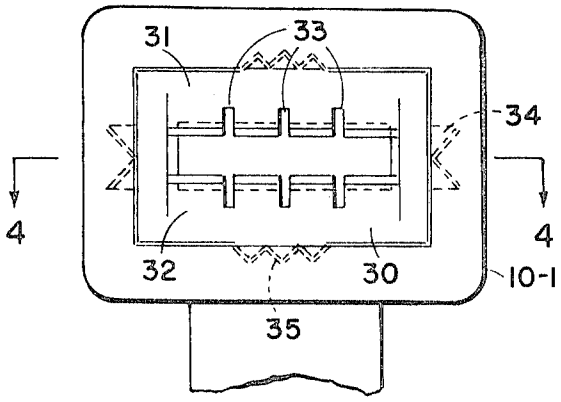

FIG. 3

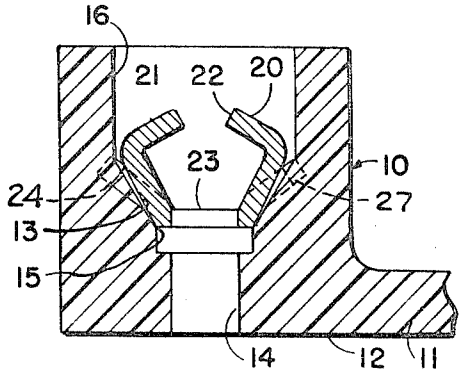

FIG. 2

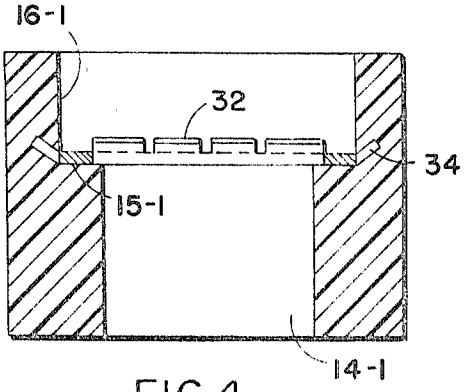

FIG. 4

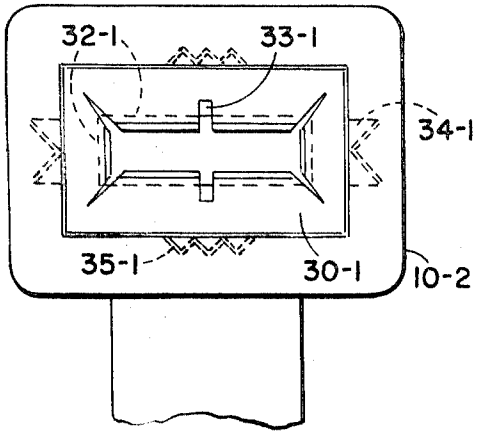

FIG. 5

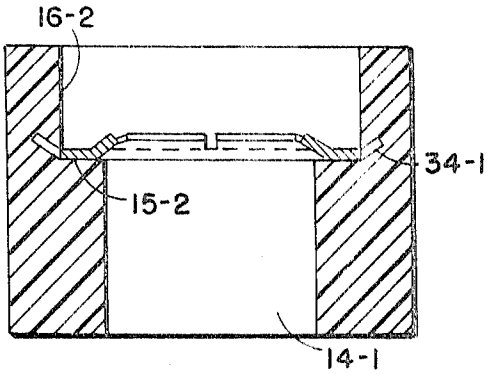

FIG. 6

INVENTOR
George Farago

by Greene and Kaul

ATTORNEYS

June 29, 1971 G. FARAGO 3,588,961

ADJUSTABLE SELF-LOCKING BUNDLING STRAPS

Filed Sept. 18, 1969 4 Sheets-Sheet 2

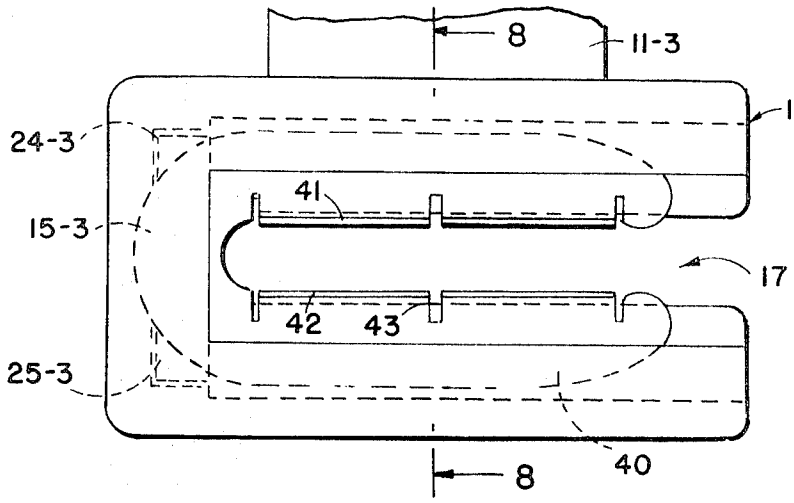

FIG. 7

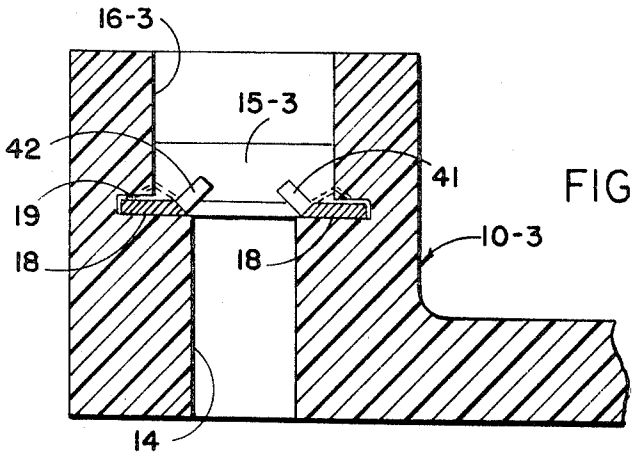

FIG. 8

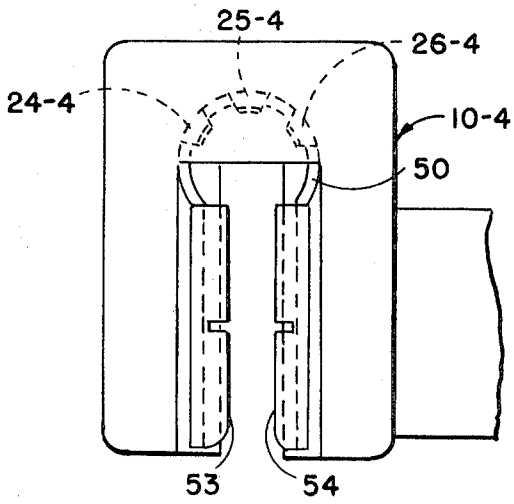

FIG. 9

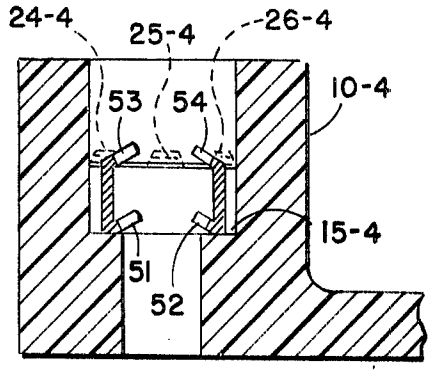

FIG. 10

INVENTOR.
George Farago

BY
Grace and Burr

ATTORNEYS

June 29, 1971 G. FARAGO 3,588,961

ADJUSTABLE SELF-LOCKING BUNDLING STRAPS

Filed Sept. 18, 1969 4 Sheets-Sheet 3

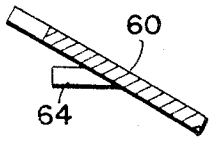

FIG.11A

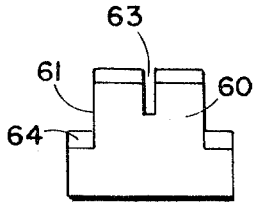

FIG.11B

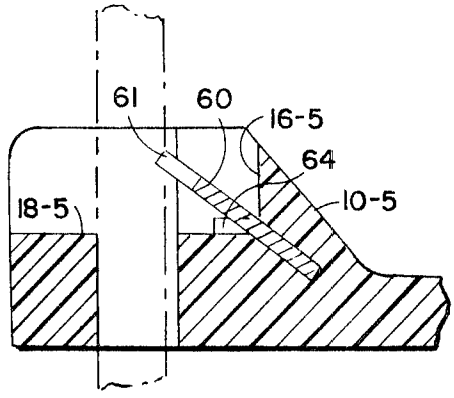

FIG.11

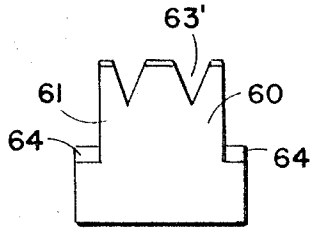

FIG.11C

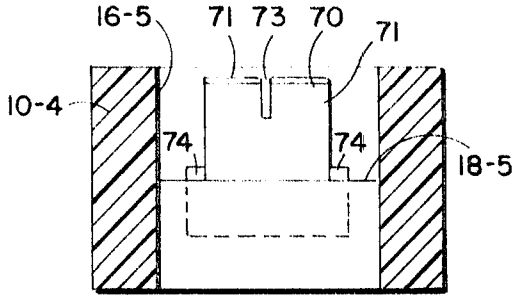

FIG.12

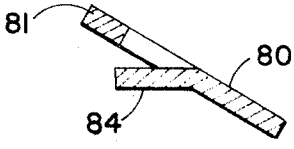

FIG.12A

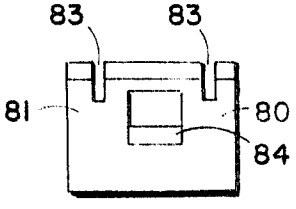

FIG.12B

INVENTOR
George Farago

by Greene and Kaste

ATTORNEYS

June 29, 1971 G. FARAGO 3,588,961

ADJUSTABLE SELF-LOCKING BUNDLING STRAPS

Filed Sept. 18, 1969 4 Sheets-Sheet 4

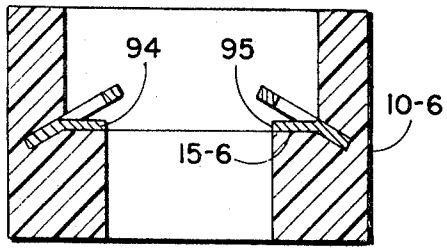

FIG.13

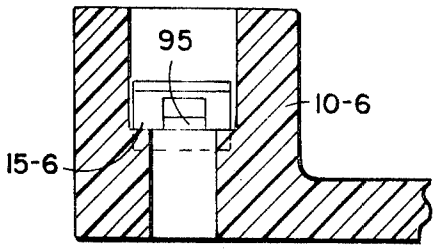

FIG.14

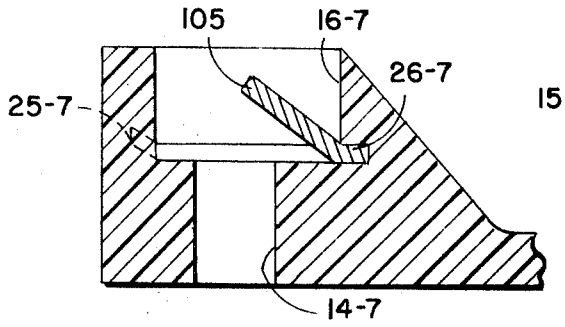

FIG.15

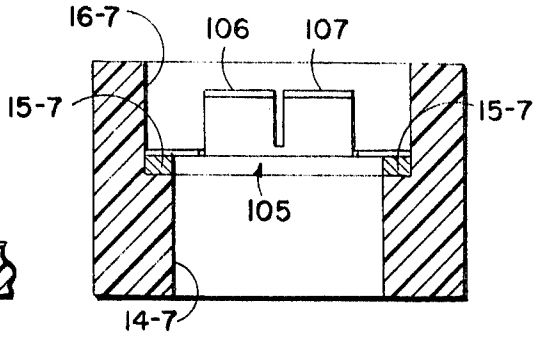

FIG.16

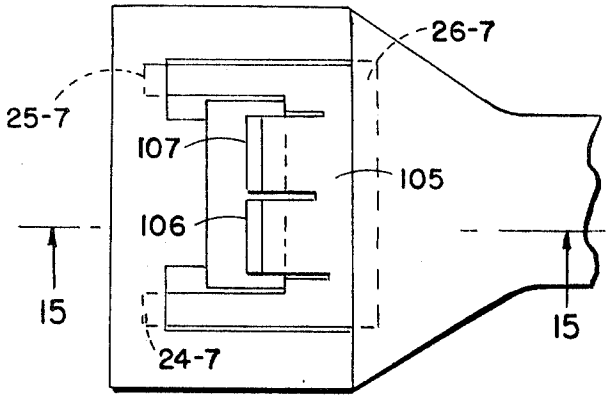

FIG.17

INVENTOR
George Farago

by Greene and Dunne

ATTORNEYS

United States Patent Office 3,588,961 Patented June 29, 1971

3,588,961

ADJUSTABLE SELF-LOCKING BUNDLING STRAPS

George Farago, 206 E. 37th St., Brooklyn, N.Y. 11203

Filed Sept. 18, 1969, Ser. No. 859,080
Int. Cl. B65d 63/00
U.S. Cl. 24—16 9 Claims

ABSTRACT OF THE DISCLOSURE

The invention relates to a flexible, self-locking strap of the type having a head at one end of a strap portion with an opening in the head and a metal locking member within the opening, the opening in the head being constructed to provide a seat which accurately positions a locking member adapted to engage firmly the strap portion with predetermined force.

This invention relates to improvements in the adjustable, plastic, self-locking tie-straps or bundling straps used for supporting and/or tying a bundle of linear articles or articles which have a significant linear portion; more particularly, the invention relates to self-locking, plastic bundling straps for supporting and/or binding bundles of electrical wires or cables.

Adjustable, self-locking plastic tie-straps are especially useful in industries where prefabricated "harnesses" of electrical connections are prepared for installation. Such straps comprise generally a linear strap portion and a head portion having a rectangular opening therein adapted to permit movement of the strap portion therethrough to form a loop, and containing locking means to prevent withdrawal or reverse movement of the strap to open or loosen the loop. The military specifications for such tie straps require that metal locking devices must be securely anchored and must not be exposed outside the hub or head. Thus, the metal locking or restraining member is partially embedded in the plastic head or hub of such strap so as to project at an angle (different from a right angle or a straight angle), into the aperture (opening) of the head, the projecting portion of the locking member having a relatively sharp edge at the free end with said sharp edge parallel to one of the sides of the rectangular opening, or parallel to another locking member. Said metal locking member or members must be somewhat flexible to permit insertion of the strap portion through the head of the strap.

A problem with this type of bundling strap is to provide a mass-producible locking device with the resistance and strength necessary to prevent the withdrawal of the strap which, at the same time, requires only a small force for the insertion of the strap and tightening or adjustment thereof. A previous proposal for varying the stiffness of the embedded locking or restraining member along its length, for example, is of very limited value in the solution of this problem, because the variation in the position, or in the inserted length of the embedded restraining member within the head portion cannot be held to a small tolerance due to the limitations of the construction and of the manufacturing methods. A variation in the clearance between the strap engaged by said flexible locking member and the opposing member or surface in the head portion, or a variation in the resilience or strength of the locking member created, for example, in the metal and/or the characteristics of the embedding plastic to oppose withdrawal of the strap, can greatly alter the usefulness of such a bundling strap.

The objects of this invention are the following:

(1) To provide a self-locking bundling strap where the metal locking member is an independent component from the plastic part of the strap and is anchored only in the head portion of said strap.

(2) To provide a self-locking bundling strap where the metal locking member is anchored safely in a seat formed within the head portion of the strap, so that the engaging gripping edges for the strap are positioned at a predetermined distance and have a flexural strength determined only by the design data.

(3) To provide a self-locking bundling strap where the anchoring means to fix the position of the metal locking device safely in the head portion of the strap is formed as part of the metal locking member itself.

(4) To provide a self-locking bundling strap with self-adjusting gripping action where the gripping force on the body of the strap increases directly as the withdrawal force increases.

(5) To provide a self-locking bundling strap with parallel acting, double-locking metal means.

(6) To provide a quick release type of self-locking bundling strap where the metal locking means is a completely independent component from the plastic part of the strap and is anchored only in the head portion of said strap.

(7) To provide a quick release type of self-locking bundling strap where the anchoring means of the metal locking device is formed as part of the metal locking member itself.

(8) To provide a quick release type of bundling strap where the metal locking means is anchored safely in a seat within the head portion of the strap, so that the engaging gripping edges for the strap are positioned at a predetermined distance and have a flexural strength determined by the design data.

(9) To provide a quick release type of self-locking bundling strap with parallel acting, double-locking, metal means.

(10) To provide a self-locking bundling strap with a metal locking member having means to increase the flexure strength thereof in the direction of withdrawal and means to fix the embedded depth of said member in the plastic head.

(11) To provide a self-locking bundling strap with means to decrease the force needed to insert the strap in the head portion without lessening substantially the gripping force applied to withdraw the strap.

(12) To provide a strong, easily applied self-locking plastic bundling strap with metal locking members which can be readily and economically mass produced.

In the drawing:

FIG. 1 is a top plan view of the head portion of a bundling strap made according to my invention.

FIG. 2 is a cross-sectional view taken on line 2—2 of FIG. 1.

FIG. 3 is a top plan view of a modified form of a bundling strap made according to my invention.

FIG. 4 is a cross-sectional view taken on line 4—4 of FIG. 3.

FIG. 5 is a top plan view of another form of a bundling strap made according to my invention.

FIG. 6 is a transverse cross-sectional view of the head of the strap of FIG. 5.

FIG. 7 is a top plan view of a "quick release" form of head for the bundling strap of the invention.

FIG. 8 is a side cross-sectional view taken on line 8—8 of FIG. 7.

FIG. 9 is a top plan view of a modified form of head for the "quick release" bundling strap of the invention.

FIG. 10 is a cross-sectional view of FIG. 9.

FIG. 11 is a side cross-sectional view of the head of another form of a bundling strap with the metal insert made according to the invention.

FIGS. 11A, 11B, and 11C are plan and side views respectively of the metal insert of FIG. 11.

FIG. 12 is a transverse cross-sectional view showing the head of FIG. 11.

FIGS. 12A and 12B are front and side views respectively of an alternative form of the metal insert for FIG. 12.

FIGS. 13 and 14 are transverse and side cross-sectional views respectively of another head and the metal inserts exemplifying my invention.

FIGS. 15–17 show still another modified form of head and the metal insert.

In the device of FIGS. 1–2, the head **10** has a lower portion **12** which is a continuation of strap **11**, and a nest portion **13** to hold the metal locking device **20**. An opening **14** extends through the lower or strap portion **12** of the head **10**, whereas in the nest portion **13**, the opening is expanded to provide seats **15** to fix the position of the metal locking means **20** within the head **10** and to provide the opening **16** of a size which permits the locking means **20** to be admitted.

The locking means **20** is made of metal and comprises the blades **21, 22** extending from the lower frame **23**. The blades are bent along a centrally located line. Stamped out from the lower portion of the blades are a plurality of cleats or anchoring means **24, 25, 26, 27**, which are pressed into the walls of the nest **13**, as shown, to hold the locking means in place. The stamped out portions increase the flexibility of the blades and their length also aids in permitting the tips of the blades **21, 22** to be flexed outwardly when the end of strap **11** is threaded therethrough, therefore the strap's insertion force is very low.

The anchors **24, 25, 26, 27** of the metal locking device **20**, are stamped out of the device itself, oppose displacement of the locking devices by the insertion force of the strap **11**, but permit displacement of the device in the withdrawal direction. The gripping jaws and blades **21, 22** of the locking device are pressed more and more together in relation with the displacement in the nest **13** of the plastic head **10** and so the gripping action on the strap's body increases with higher withdrawal force. The displacement is limited by the shoulder of the plastic head and the lower frame **23** of the metal device.

The head **10–1**, shown in FIGS. 3 and 4, is provided with a shoulder **15–1**, which is adapted to seat the metal frame **30** of the locking member from which are stamped or otherwise formed the two blades **31** and **32**. The said blades **31** and **32** are separated by slots **33** to increase their flexibility and decrease the insertion force needed. The frame **30** is formed with a plurality of lugs, cleats or serrations **34, 35** which dig into the walls of opening **16–1**. For example, the metal frame **30** can be pressed into the opening **16–1** while the cleats **34** of serrations **35** are pushed somewhat into the plastic to dig into the wall.

The self-locking bundling strap of FIGS. 3–4 has a very simple but strong clinching locking means, which is in the form of a flat frame, the blades and the anchor being stamped out of a resilient metal plate.

The head **10–2** of FIGS. 5–6 is somewhat similar to that of FIGS. 3–4, but the metal locking means has four blades from which opposite pairs act parallel, gripping all edges of the strap, providing high tensile strength and greater safety.

The head **10–3** of FIGS. 7–8 is a quick release type which permits the end of a loop in strap **11–3** to be slid in from the open side **17**. The enlarged opening **16–3** includes two side seats **18—18** and one end nest portion **15–3**. Above each of the seats **18** is a head **19, 19**. The horseshoe shaped retaining locking means **40** is forced into the space between heads **19** and shoulders **15–3** and **18**. Said retaining locking means **40** has two series of blades **41, 42**, the blades of each series being separated by an appropriate number of slots **43** or serrations to increase their flexibility and the gripping action. The anchors **24–3** and **25–3** are stamped out of the metal device itself, holding locking means **40** firmly in place.

The head **10–4** of FIGS. 9–10 is a quick release type somewhat similar to that of FIGS. 7–8, but in FIGS. 9–10 the retaining metal locking means **50** is held in place within the nest **15–4** and the locking means is provided with four series of retaining blades **51, 52, 54, 55**, each of said series of blades being separated by an appropriate number of slots. The anchors **24–4, 25–4, 26–4** oppose any pull out force, but permit free spring-movement of the device to widen to gap for insertion of the strap. When the strap is inserted from the side of the head, the blades of the retaining locking member open, due to the resiliency of the member **50**, but the edges of the blades grip the body of the strap with the full retaining force. The adjustment can be made by pulling the strap further between the blades or the strap can be pulled out from the side of the head and pushed in at the right place. FIGS. 9 and 10, show a double acting locking device which has a much better performance than the single one, (greater safety).

FIGS. 11–12 show how single body locking means can be accurately positioned lengthwise avoiding any significant variations in the clearance of engagement, in the opening **16–5** of an appropriate head **10–5** which is provided with a shouldered surface **18–5**. Said blade **60, 70** or **80** has a fairly strong blade end **61, 71** or **81**, can be separated in a series of blades by slots **63, 63', 73** or **83**. One or more lugs **64, 74** or **84** are stamped out from the locking member to provide a stop for the latter when the lower end thereof is embedded in the plastic head. This lug or lugs bear against the planar shoulder of the head portion and reinforce the blade against the withdrawal force, but permit flexing in the other direction.

The two blades **90** and **91** of FIGS. 13 and 14 are embedded in the side of the opening of the head **10–6**. The shoulders **15–6** formed between opening **14–5** and **16–5** provide a rest and stop for the lugs **94, 95** respectively of locking blades **90** and **91**.

The locking member **105** of FIGS. 15–17 has anchoring means **24–7, 25–7** and **26–7** which imbed in the plastic opening. The member **105** is stamped out of a flat metal plate, and as shown, flat portions of the locking member rest on the shoulder formed between opening **14–7** of the strap and **16–7** of the boss. The blade is slotted to provide two or more portions **106, 107**, or serrated as FIG. 11C shows.

I claim:

1. A flexible, self-locking bundling strap of the type having a head portion at one end of the linear body portion forming the strap, said head portion having a transverse opening therethrough with one part of said opening having a cross-section corresponding approximately to, but somewhat larger than the linear body portion of the strap to provide a clearance between the strap and the opening, a communicating second part of the opening being enlarged and shaped to provide a nest or seat for a prefabricated, self-contained metal locking member, a metal locking member with flexible blades and comprising anchoring means formed from the metal itself extending outwardly from the body proper thereof, said anchoring means gripping the wall of the nest or seat to fix the position of the locking member in the head portion with respect to said transverse opening and to reduce the force necessary to insert said linear body portion through the clearance of edges of the flexible blades of the locking member, said bladed locking edges engaging firmly the two opposite sides of the body of the strap and being constructed to close towards one another upon reverse displacement of the strap.

2. A flexible, self-locking bundling strap as claimed in claim **1**, wherein said metal locking member has four bladed edges, two of them engaging the wider body portion of the strap and the other two engaging the narrower sides thereof.

3. A self-locking bundling strap as claimed in claim 1 wherein at least one of said blades of the locking member comprises at least one slot extending perpendicular to the bladed edge intermediate the ends of the strap-engaging edge.

4. A self-locking bundling strap as claimed in claims 1 wherein at least one of said blades of the locking member has a serrated strap-engaging edge.

5. A flexible, self-locking bundling strap of the type having a head portion at one end of the linear body portion forming the strap, said head portion having a transverse opening, one part of said opening having a cross-section corresponding approximately to, but somewhat larger than, that of the linear body portion to provide a clearance for the strap, a communicating second part of said opening being enlarged with respect to the first part to provide a nest or seat for a metal locking member, a metal locking member having at least one pair of opposed trapezoidal shaped blades with gripping edges extending towards the center of the opening and upwardly in the direction of the enlarged part of the opening, anchoring means formed on the metal locking member extending from the body portion thereof into the wall of the second or enlarged part of said opening to fix the locking member in the head portion and locate the same with respect to the opening, said blades of the locking member being adapted to engage opposite sides of the strap portion whereby any attempt to withdraw the strap once it is inserted in the head increases the locking force by pulling the trapezoidal blades closer together.

6. A flexible, self-locking bundling strap of the quick release type having a head portion at one end of the linear body portion forming the strap, said head portion having a transverse opening therethrough with one part of said opening having a cross-section corresponding approximately to, but somewhat larger, than the linear body portion of the strap to provide a clearance between the strap and the opening, an enlarged communicating second part of the opening, an axis parallel with that of the first part and a radial slot extending outwardly from both parts of said opening in said head portion, said head being constructed so that said second or enlarged part of said opening provides a nest or seat for a prefabricated, metal locking member, a metal locking and retaining member with flexible retaining blades and comprising anchoring means formed from the metal itself nested in the rest of said head, with said anchoring means gripping the wall of said seat or nest to fix the position of the metal locking means in said head with respect to the transverse opening and constructed to reduce the force required to introduce the linear body portion of the strap into said opening, said flexible retaining blades of the locking membed adapted to engage and firmly lock two opposite sides of the body portion of the strap when said body portion is looped upon itself and inserted in said head through said radial slot.

7. A flexible, self-locking bundling strap of the quick reverse type defined in claim 6, wherein said metal locking member is constructed with four bladed edges, two of each edges parallel acting and double locking the strap's linear body portion.

8. A flexible self-locking bundling strap of the type having a head portion at one end and a linear body portion forming the strap, said head portion having a transverse opening therethrough, one part of said opening having a cross-section corresponding approximately to, but somewhat larger than that of the linear body portion of the strap, a second communicating part of said opening being enlarged to provide a seat between the two parts of the opening, at least one metal locking member having a locking blade portion extending into said transverse opening and an anchoring portion embedded in the material of said head portion, said metal locking member also having a locator means integral therewith constructed and arranged to cooperate with the seat in said opening to fix the position and distance the anchoring portion embeds into the material of the head portion and thereby to properly locate the locking blade of the locking member with respect to said opening.

9. A self-locking bundling strap as claimed in claim 8 wherein said locator means makes surface to surface contact with a wall of the opening of the head portion to additionally support and stabilize the engaging blade against force applied to withdraw the strap.

References Cited

UNITED STATES PATENTS

3,186,047	6/1965	Schwester et al.	24—16PB
3,397,430	8/1968	Pearl	24—16PB
3,490,104	1/1970	Kabel	24—16PB

FOREIGN PATENTS

920,788	1/1947	France	24—16PB
943,240	12/1963	Great Britain	24—16PB

DONALD A. GRIFFIN, Primary Examiner