June 7, 1966 F. J. BARTZ 3,254,817

HOLDER FOR SURGICAL DRAINAGE BAGS

Filed Aug. 31, 1964 2 Sheets-Sheet 1

Fig. 1

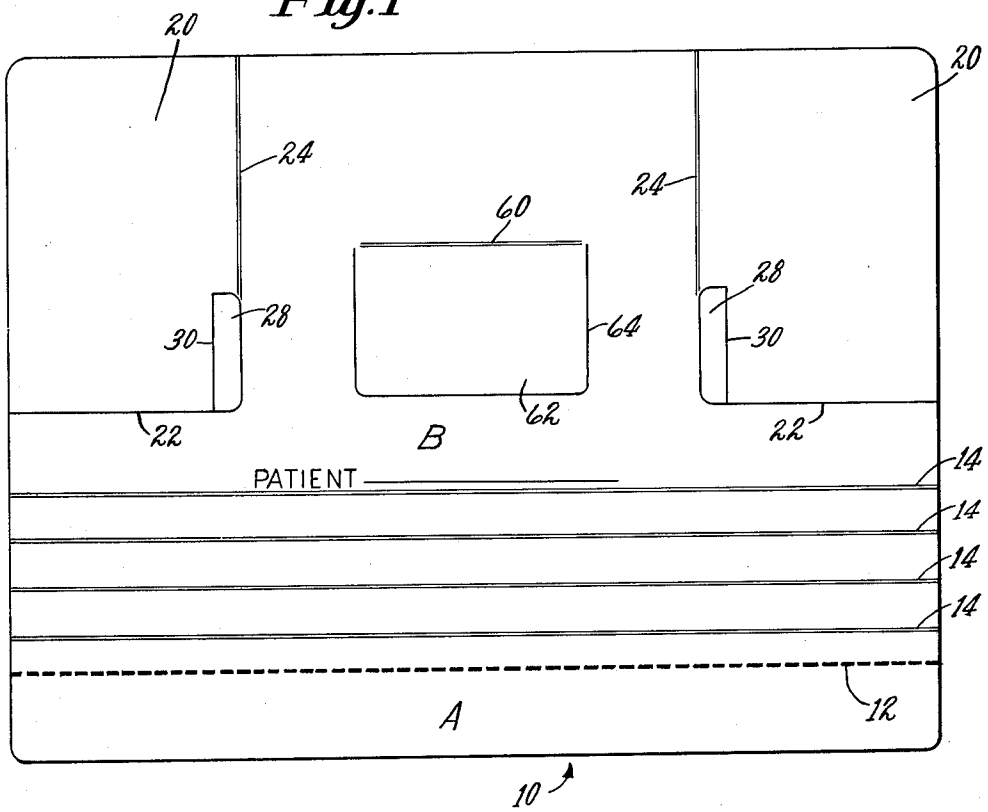

Fig. 3

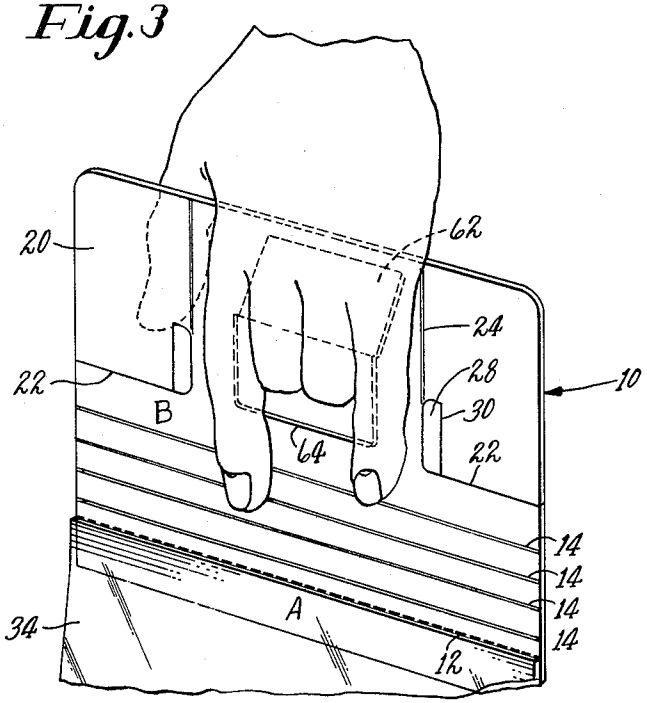

Inventor
Frank J. Bartz
By his Attorney
Robert E. Kass

June 7, 1966 F. J. BARTZ 3,254,817

HOLDER FOR SURGICAL DRAINAGE BAGS

Filed Aug. 31, 1964 2 Sheets-Sheet 2

Fig. 2

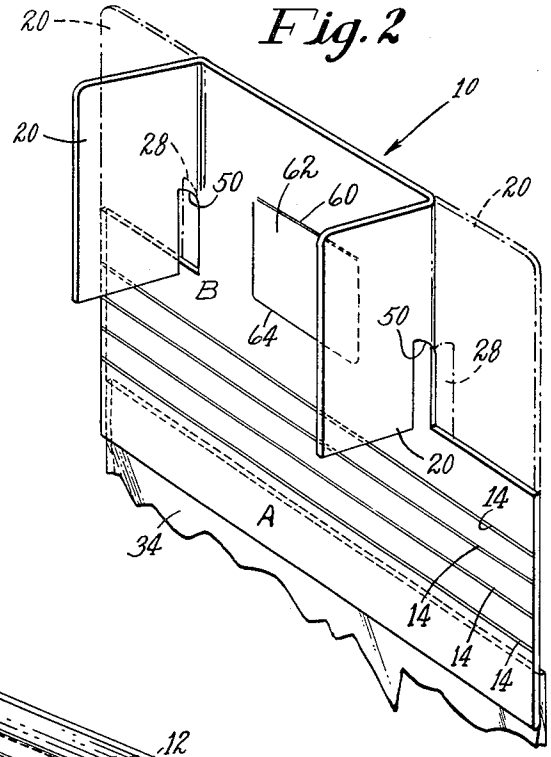

Fig. 4

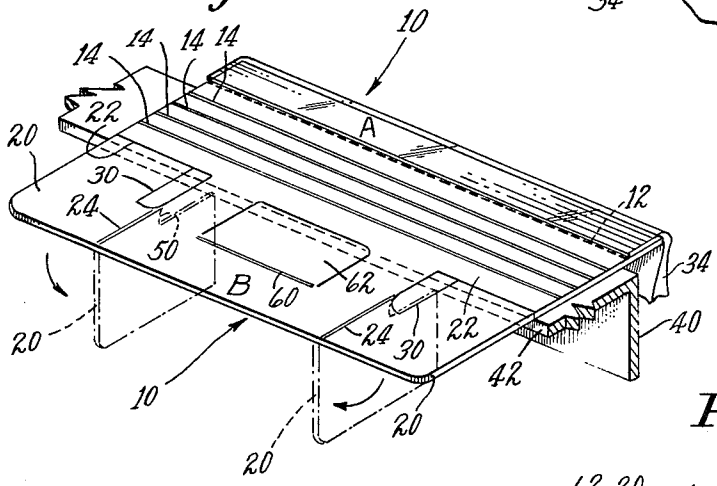

Fig. 5

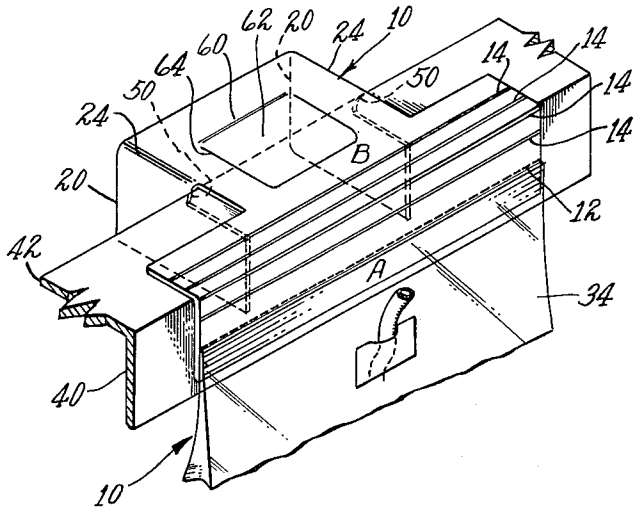

United States Patent Office

3,254,817

Patented June 7, 1966

3,254,817

HOLDER FOR SURGICAL DRAINAGE BAGS

Frank J. Bartz, Point Road, Manomet, Mass.

Filed Aug. 31, 1964, Ser. No. 393,123

5 Claims. (Cl. 224—45)

This invention relates to a holder for post surgical drainage bags or in-dwelling catheters and, more specifically, to a disposable holder and hanger particularly adapted for use with drainage bags of the type illustrated and described in my copending application Ser. No. 192,406, filed May 4, 1962, now Patent No. 3,186,409.

Post surgical drainage bags are used to provide a reservoir for waste fluids from a patient after many types of surgical procedures. The waste fluids produced by the patient are deposited in the drainage bag through drainage tubing. The condition of the patient and nature of the fluid being collected makes is imperative that a sterile condition be maintained in the apparatus just described. Further, every precaution must be taken to minimize or eliminate potential spillage of fluids deposited in the bag and possible communication of infection to personnel handling the bag. The contamination of the drainage bag and appurtenant tubing by airborne bacteria must also be avoided.

Handling of the drainage bag, appurtenant tubing, and other equipment used in conjunction therewith by hospital personnel represents the greatest deterrent to accomplishing the required conditions discussed in the preceding paragraph. That is, it is in the assembly and dismantling of the drainage bag and associated equipment that contamination of the types described above are most likely to occur. The danger of destroying the sterile condition, spilling, etc. is increased in proportion to the number of times the drainage bag and tubing, as well as associated equipment, are dismounted and/or removed and in proportion to the complexity of performing assembly and dissassembly.

Heretofore, post operative drainage bags and in-dwelling catheters of the type made of plastic sheet material were commonly mounted on the bed rail or other supporting structure by means of variously designed metallic hangers. The drainage bag was secured to the metallic hanger by an assortment of supports upon which an upper portion of the bag was impaled. The metallic hangers of the prior art generally provided adequate means for securely locating a drainage bag in position. However, they invariably required considerable manipulation to successfully impale the appropriate portion of the drainage bag and to locate the hanger in position on the supporting structure. The difficulty in performing these operations naturally increased the possibility of contamination of the drainage bag and associated tubing by the hospital personnel attempting assembly and mounting thereof. Further, the removal of the drainage bag was equally complex and arduous and thereby often was the cause of spillage and contamination.

Metallic hangers also presented a storage problem in that the three-dimensional configuration required to accomplish mounting on the bed and drainage bag was not easily stored. Further, the cost of cleaning, sterilizing and transfer to and from the storage facility was extremely burdensome. A further danger in the use of metallic hangers is cross infection of the patients. That is, if the hangers are not completely sterilized after use and maintained and transferred in sterile condition, there is a chronic danger of infection to the patient for whom the hanger is subsequently used.

A further deficiency found with metallic hangers is that they do not lend themselves to use by the ambulatory or semi-ambulatory patient. That is, it is extremely

difficult, if not impossible, for the patient to remove the hanger from the bed rail and return the same. Further, the hanger can not easily be held or carried by the ambulatory patient when out of bed. Accordingly, other means had to be provided which allowed the ambulatory patient to carry the drainage bag when out of bed. The use of such other means required removal or handling of the drainage bag, tubing, and associated equipment, by hospital personnel and thus constituted a source of contamination.

Other methods or means for mounting drainage bags or in-dwelling catheters, such as plastic straps or hooks, fine wire twisted about the bed rail, and draw strings used to close and mount the bag, were similarly objectionable. Each of these alternate means were difficult to mount on the bed rail, to dismount, and did not provide means adapted to permit the ambulatory patient to carry the drainage bag.

The disclosure of the above-referenced copending application teaches a drainage bag which solves many of the problems discussed above in remounting and dismounting of the bag. The attaching tape provided on the upper portion of the bag permits the bag to be readily mounted on a bed rail simply by pressing the surface of the bag having the tape thereon firmly against the outer face of the bed rail or other support. Removal is equally facile. However, means are not provided which permit the ambulatory patient to carry the bag with him during intervals when he is out of bed. Further, a partially filled drainage bag cannot easily be transferred by hospital personnel as means or space for gripping the bag are lacking.

Accordingly, it is an object of this invention to provide a holder for drainage bags or in-dwelling catheters which can be facilely mounted on and removed from a bed rail or other supporting structure.

It is a further object of this invention to provide a disposable holder for drainage bags or in-dwelling catheters which can be conveniently stored prior to use and which can be readily mounted on a bed rail or other support structure.

It is a still further object of this invention to provide a holder for drainage bags or in-dwelling catheters which can be easily carried by an ambulatory patient and which can be readily moved.

To these ends and in accordance with a feature of this invention there is provided a holder for supporting drainage bags for collecting waste fluids comprising a substantially flat member formed of flexible material, said flat member comprising a lower portion to which a drainage bag may be attached, an upper mounting portion having pre-cut lines and pre-crease margins which cooperatively form ears which may be folded into depending relation to said mounting portion for securely locating the holder on a support structure, and a plurality of pre-crease margins extending transversely of said holder interposed between said upper and lower portions whereby said holder may be folded at a plurality of locations to be accommodated to the shape of the support structure.

The above and other features of the invention including various novel details of construction and combinations of parts will now be more particularly described with reference to the accompanying drawings and pointed out in the claims. It will be understood that the holder embodying the invention is shown by way of illustration and not as a limitation of the invention. The principles and features of the invention may be utilized in varied and numerous embodiments and applications without departing from the scope of the invention.

In the drawings,

FIG. 1 is a top plan view of a holder embodying the features of the invention illustrating the holder prior to preparation for use;

FIG. 2 is a perspective view of the holder shown in FIG. 1 with a drainage bag secured thereto;

FIG. 3 is a pictorial view of the holder shown in FIG. 1 illustrating use thereof to carry a drainage bag attached thereto;

FIG. 4 is a perspective view of the holder shown in FIG. 1 showing the holder being mounted on a bed rail; and

FIG. 5 is a perspective view of the holder shown in FIGS. 1 and 4 mounted on a bed rail.

As illustrtaed in FIG. 1, the holder **10** is supplied to a hospital or the like in the form of a flat generally rectangular member. The holder **10** can thus be easily stored and transferred. Indeed, as a result of the size and configuration thereof, a supply of holders **10** can be kept in a convenient place at the bedside of any patient who might require the same. In the preferred embodiment, the holders are fabricated of a fibre-board material. However, any material having substantial flexibility may be employed.

The holder **10** comprises a lower portion A defined by the dotted line indicia **12** to which a drainage bag of the type illustrated and described in the above-referenced copending application may be attached. That is, the portion A is of sufficient size to permit the attaching tape which extends across the upper portion of the drainage bag to be completely adhered thereto. When it is desired to dispose of a drainage bag secured to the portion A of the holder **10**, the attaching tape is simply peeled away and another drainage bag may thereafter be mounted thereon. This replacement procedure may be repeated six to eight times with holders made from fibre-board material. However, the low cost of manufacture to be discussed hereinafter, makes it economically feasible to use the holder on but one patient. That is, a holder, regardless of its condition, is disposed of when the needs of the particular patient have been fulfilled. Thus, the potential danger of patient cross infection is vitiated with the low cost, disposable holder **10**. Although the holder **10** is most advantageously used with drainage bags having attaching tape as discussed above, other means may be employed to attach a drainage bag to the portion A.

The lower portion A of the holder **10** is separated from an upper, mounting portion B by a plurality of pre-crease or score margins **14** extending transversely of the holder, parallel to the dotted line indicia **12**. The pre-crease margins **14** are formed during manufacture to facilitate ready folding of the holder **10** at a plurality of locations i.e. along any of the margins **14**. As hereinafter discussed in detail, the holder **10** can be easily folded along the appropriate margin **14** after the mounting portion B has been located in position on a bed rail or other support structure whereby the lower portion A depends perpendicularly therefrom in abutting relation to the forward portion of the bed rail, see FIG. 5.

The upper, mounting portion B comprises ears **20, 20** symmetrically formed on opposite sides thereof by essentially L-shaped pre-cut lines **22, 22** and pre-crease or score margins **24, 24**. Generally rectangular, removable drop out members **28, 28** are formed by the pre-cut lines **22, 22** and essentially inverted L-shaped pre-cut lines **30, 30**. It should be noted and is here restated for emphasis, that the holder **10** is supplied to hospitals or the like as a flat member which is easily stored and transported. The pre-cut lines **22, 22** and **30, 30** and pre-crease margins **14** and **24** are simply imprinted in the flat holder **10** to facilitate the use thereof as a holder and hanger, as hereinafter described.

In the use of a disposable holder **10** by hospital personnel or the like, a plastic drainage bag or in-dwelling catheter **34**, preferably of the type described in the reference copending application, is attached to the lower portion A as described above or by any other convenient means. The disposable holder **10** may be marked in the appropriate place to indicate the patient for whom it is to be used to avoid cross use. The drainage bag and drainage tubing may then be conveniently assembled and the tubing inserted into the patient. The flat holder **10** is then inserted over a bed rail **40**, as illustrated in FIG. 4 in solid lines. This operation is easily accomplished as the holder **10** is flat and therefore presents no obstructions to be engaged by proximately located structure of the bed. When the upper, mounting portion B has been completely inserted such that the pre-cut lines **22, 22** are located beyond the edge **42** of the bed rail **40**, the ears **20, 20** are folded downwardly along the pre-crease margins **24, 24**, see FIGS. 2, 4 and 5. The ears **20, 20** are easily folded as the holder **10** has been completely severed along the pre-cut lines **22, 22** and pre-creased along the margins **24, 24**. The person mounting the holder need only reach under the bed rail **40** and depress the ears **20, 20** by application of a slight force.

The ears **20, 20** may be folded downwardly in the manner just described and then returned to the original flat position prior to insertion if it is desired to test the holder **10** prior to insertion. It is to be noted that the holder **10** will provide sufficient support for the drainage bag **34** in the original flat form when it is located on the bed rail **40** and the mattress and other equipment are located thereabove. That is, when the holder **10** is inserted over the bed rail **40** in the flat form, as illustrated in FIG. 4, the bedding will apply a downward force thereon whereby the holder is fixed in position between the mattress and the bed rail **40**. The ambulatory patient using the holder to carry a drainage bag, as hereinafter described, may therefore easily mount the holder **10** by simply sliding the upper mounting portion B between the bed rail **40** and the mattress. The ears **20, 20** which insure that the holder **10** is securely locked on the bed rail **40** may be subsequently depressed by the hospital personnel and located in position as hereinafter described.

After the ears **20, 20** have been folded downwardly as discussed above, the pre-cut drop out members **28, 28** will be freed and will drop out of position on the holder **10**. As best illustrated in FIG. 4, generally rectangular recesses **50** are thus formed along the pre-crease fold margins **24, 24** of the ears **20, 20**. The holder **10** is then pulled outwardly away from the bed rail **40** with the ears **20, 20** depending downwardly and the edge **42** of the bed rail **40** passes into the recesses **50** and engages the ends thereof. The holder **10** is thus securely locked in position on the bed rail.

When the holder **10** has been locked in position as defined above, the holder is folded along the appropriate pre-crease margin **14** whereby the portion A will depend downwardly in engagement with the front face of the bed rail **40** thereby providing firm support for the drainage bag **34**.

The holder **10** may be conveniently removed from the locked position on a bed rail **40** by sliding the holder **10** inwardly until the ears **20, 20** pass out from under the edge **42** of the bed rail **40**, folding the ears **20, 20** into the upper position whereby the mounting portion B is flat, and sliding the holder **10** outwardly across the bed rail **40**.

The upper, mounting portion B of the holder **10** also has a centrally located handle portion **60** which may be employed by pivoting a flap **62** formed by a pre-cut margin **64** out of the flat position illustrated in FIG. 1. As illustrated in FIG. 3, the handle **60** is formed by the user by pressing the lower portion of the flap **62** outwardly in either direction whereby a hand may be inserted into the resultant opening. Opening or pivoting of the flap **62** is facilitated by a pre-crease margin which defines the boundary of the handle portion **60**. The holder **10** and drainage bag **34** secured thereto may be conveniently carried by an ambulatory patient or hospital personnel by grasping the handle **60** as illustrated in FIG.

3. The handle does not constitute an obstruction which will prevent insertion or withdrawal of the holder **10** over a bed rail as it may be readily returned to the flat position after use. The holder thus can be easily carried by the ambulatory patient and, further, can be readily mounted on the bed rail by said patient.

The holder **10** described above may be economically manufactured by simply imprinting the pre-cut lines and pre-crease margins on an appropriately shaped piece of fibreboard material or the like. The low cost of manufacture makes it economically feasible to dispose of each holder after it has been used for a specific patient. Communication of infection is thereby prevented.

Having thus described my invention, what I claim as new and desire to secure by Letters Patent of the United States is:

1. A holder for supporting a drainage bag used to collect waste fluids comprising a substantially flat member formed of flexible material, said flat member comprising a first portion to which a drainage bag may be attached, a second, mounting portion having pre-cut lines and pre-crease margins which cooperatively define ears which may be folded along the pre-crease margins into depending relation to said second portion for securely locating the holder on a support structure, and a plurality of pre-crease margins extending transversely of said holder interposed between said first and second portions whereby the holder may be folded at a plurality of locations to facilitate accommodation to the shape of a particular support structure.

2. A holder for supporting a drainage bag used to collect waste fluids comprising a substantially flat member formed of flexible material, said flat member comprising a first portion to which a drainage bag may be attached, a second mounting portion having pre-cut lines and pre-crease margins which cooperatively define ears which may be folded along the pre-crease margins into depending relation to said second portion for securely locating the holder on a support structure, and a pre-cut line which defines a flap which may be pivoted outwardly from the flat holder about a pre-crease line thereby to form a handle in cooperation with the remainder of the second portion, and a plurality of pre-crease margins extending transversely of said holder interposed between said first and second portions whereby the holder may be folded at a plurality of locations to facilitate accommodation to the shape of a particular support structure.

3. A holder for supporting a drainage bag used to collect waste fluids comprising a substantially flat member formed of flexible material, said flat member comprising a first portion to which a drainage bag may be attached, a second mounting portion having pre-cut lines and pre-crease margins which cooperatively define ears which may be folded along said pre-crease margins into depending relation to said second portion and pre-cut drop out portions which define recesses at the folded margins of said ears, said recesses facilitating the positioning of said

ears securely on a support structure, and a plurality of pre-crease margins extending transversely of said holder interposed between said first and second portions whereby the holder may be folded at a plurality of locations to facilitate accommodation to the shape of a particular support structure.

4. A holder for supporting a drainage bag used to collect waste fluids comprising a substantially flat member formed of flexible material, said flat member comprising a first portion to which a drainage bag may be attached, a second mounting portion having pre-cut lines and pre-crease margins which cooperatively define ears which may be folded along said pre-crease margins into depending relation to said second portion, pre-cut drop out portions which define recesses at the folded margins of said ears, said recesses facilitating the positioning of said ears securely on a support structure, and a pre-cut line which defines a flap which may be pivoted outwardly from the flat holder about a pre-crease line thereby to form a handle in cooperation with the remainder of the second portion, and a plurality of pre-crease margins extending transversely of said holder interposed between said first and second portions whereby the holder may be folded at a plurality of locations to facilitate accommodations to the shape of a particular support structure.

5. A holder for supporting a drainage bag used to collect waste fluids comprising a substantially flat member formed of flexible material, said flat member comprising a first portion to which a drainage bag may be attached, a second mounting portion having essentially L-shaped pre-cut lines and pre-crease margins which cooperatively define ears which may be folded along said pre-crease margins into depending relation to said second portion, pre-cut drop out portions formed cooperatively by essentially inverted L-shaped pre-cut lines and said essentially L-shaped pre-cut lines thereby to define recesses at the folded margins of said ears, said recesses facilitating the positioning of said ears securely on a support structure, and an essentially U-shaped pre-cut line which defines a flap which may be pivoted outwardly from the flat holder about a pre-crease line thereby to form a handle in cooperation with the remainder of the second portion, and a plurality of pre-crease margins extending transversely of said holder interposed between said first and second portions whereby the holder may be folded at a plurality of locations to facilitate accommodation to the shape of a particular support structure.

References Cited by the Examiner

UNITED STATES PATENTS

1,026,711	5/1912	Shover	248—300
2,192,131	2/1940	Fishwick	224—45
2,888,148	5/1959	Meyers	248—300
2,959,386	11/1960	Garth	128—275

GERALD M. FORLENZA, *Primary Examiner.*