March 29, 1938. C. J. LEMONT 2,112,500

CONNECTER

Filed April 27, 1935

Fig. 1

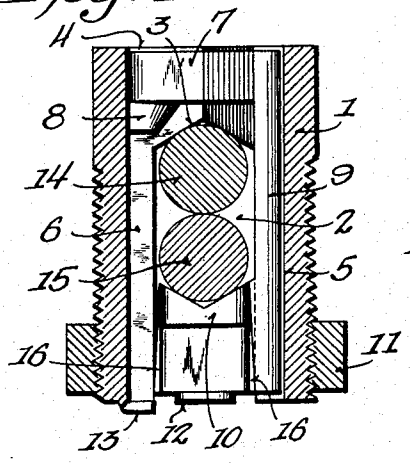

Fig. 2

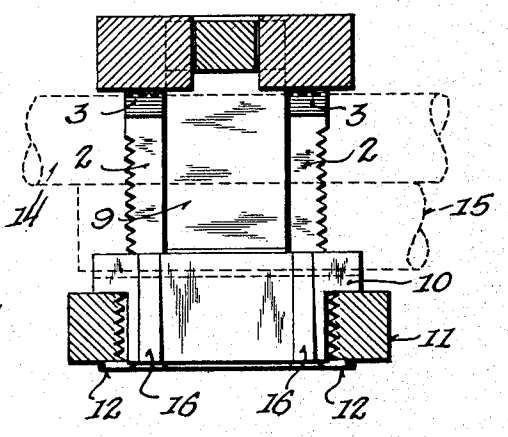

Fig. 3

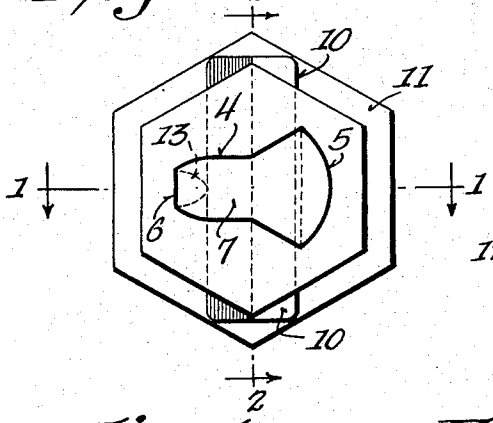

Fig. 4

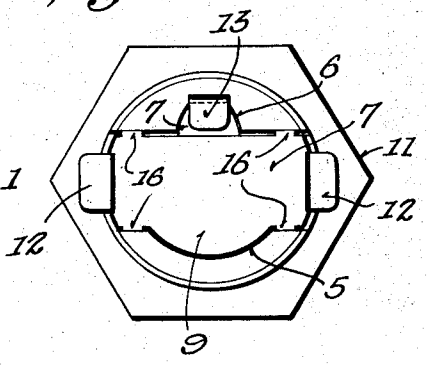

Fig. 5

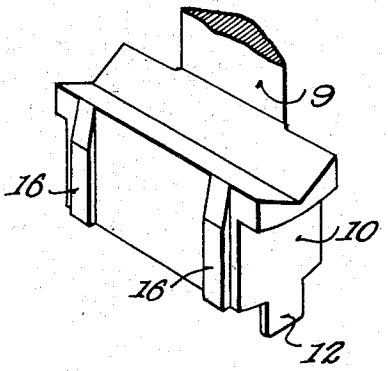

Fig. 6

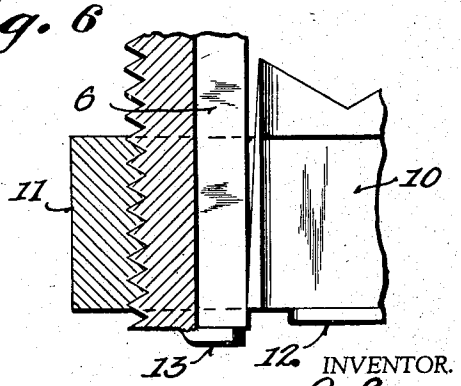

INVENTOR.

Clarance J. Lemont

BY

Chester W. Brown

ATTORNEY.

Patented Mar. 29, 1938

2,112,500

UNITED STATES PATENT OFFICE

2,112,500

CONNECTER

Clarence J. Lemont, South Milwaukee, Wis., assignor to Line Material Company, South Milwaukee, Wis., a corporation of Delaware

Application April 27, 1935, Serial No. 18,561

1 Claim. (Cl. 173—263)

This invention relates to improvements in connecters.

The connecter disclosed in this application embodies the invention disclosed in my joint application with William D. Kyle, Serial Number 701,764, filed December 11, 1933.

It is an object of this invention to provide for the movable clamping jaw, wedge-like means extending longitudinally of and engageable with the bifurcated sleeve of the clamp to hold the bifurcations in spaced relation and prevent their collapse when the clamping nut forces the jaw to clamping position and also improved means for holding the movable nut retainer in rotative and longitudinal alignment.

In the drawing:

Fig. 1 is a longitudinal sectional view of the clamping sleeve showing the nut retainer therein and taken substantially on the line 1—1 of Fig. 3.

Fig. 2 is a longitudinal sectional view of the sleeve showing the nut retainer therein taken substantially on the line 2—2 of Fig. 3.

Fig. 3 is a top plan view of the connecter.

Fig. 4 is a bottom plan view of the connecter.

Fig. 5 is a fragmentary view showing the clamping jaw of the nut retainer.

Fig. 6 is an enlarged fragmentary view of a portion of Fig. 1.

Throughout the several views like parts are identified by the same reference characters.

The connecter comprises a bifurcated sleeve 1 having diametrically opposite V-shaped clamping jaws 3. The sleeve is provided with a longitudinal opening 4 extending through the sleeve. The opening 4 at the upper end of the sleeve is shaped as illustrated in Fig. 3 and thus provides an arcuate groove 5 on one side of the sleeve and a U-shaped groove 6 on the opposite side of the sleeve and eccentrically curved relative to the axis of the sleeve.

The nut retainer is provided at its upper end with a guiding element 7 which is complementary to the opening 4 and slidable therein. This guiding element 7 is provided with a depending lug 8 which increases the guiding surface of the element 7 within the U-shaped groove 6. The guiding element 7 is integrally connected with the vertically extending arcuate connecting element 9 which is in turn integrally connected with the clamping jaw 10 spaced from the guiding element 7. The clamping jaw 10 extends over the clamping nut 11 and is provided with tongues 12 which extend radially beneath the clamping nut 11 thereby to hold the nut 11 in rotative relationship to the clamping jaw 10.

The bifurcated sleeve is provided at the lower end of one of its bifurcations with a stop element 13 which extends across the lower end of the U-shaped groove 6 and into the path of movement of the guiding element 7. Thus, when the retainer moves to an extended position relative to the sleeve, the boss 8 upon the guiding element 7 will engage the stop element 13 and prevent the retainer from becoming separated from the clamping sleeve. When the retainer is in its extended relationship to the clamping sleeve, the connecter may be placed upon a line wire 14 by passing the wire between the lower end of the sleeve and the clamping jaw 10 and then permitting the sleeve to move vertically until the sleeve comes into contact with the clamping nut 11. A lead-off wire 15 may then be inserted into the connecter by passing it through the slots 2 and between the line wire 14 and the clamping jaw 10. When this has been done, the clamping nut 11 may then be threaded upon the sleeve to move the clamping jaw 10 vertically into clamping relationship with the lead-off wire 15.

As shown, the clamping jaw 10 is provided with wedge-like portions 16 upon opposite sides of the jaw extending longitudinally relative to and disposed in the slots 2 so that they contact the walls of the slots. When the clamping nut 11 is forcing the clamping jaw into its clamping position, the tendency is to force the bifurcated members of the sleeve toward each other. Consequently a considerable amount of the area of contact between the threads of the clamping nut 11 and the threads of the bifurcated sleeve is lost and will make it possible to strip the threads. By providing the wedge-like portions 16, the bifurcations of the sleeve are held in their normal position and thus retain a maximum contacting surface between the threads of the clamping nut and the threads of the sleeve.

While I have illustrated wedge portions upon the clamping jaw, it will be obvious to those skilled in the art that the jaw itself may be wedge-shaped throughout its width and thus accomplish the same result as the wedge portions illustrated in this application. The modification just noted has not been illustrated because it would seem to be perfectly obvious after having disclosed the specific arrangement described in this application. Therefore it will be understood that the claim of this application is not limited to the specific arrangement described, except where the claim so specifically states.

I claim:

In a connecter, a combination with a bifur-

cated threaded bolt member and a clamping nut threadably engaging said member, of a clamping jaw carried by and having a part extending through said nut, and wedge-like areas on said portion within said nut extending longitudinally of the bifurcations of said bolt member, said wedge-like areas permitting free insertion of said jaw between the ends of said bifurcations and slight wedging action therewith after engagement of said nut with said bifurcations, whereby to firmly hold the threads of said bolt member and nut in engagement when said jaw is in clamping position.

CLARENCE J. LEMONT.