US00D844530S

(12) **United States Design Patent** (10) **Patent No.: US D844,530 S**
Saleen (45) **Date of Patent: ** Apr. 2, 2019**

(54) **AUTOMOBILE WHEEL FACE**

(71) Applicant: **Jiangsu Saleen Automotive Technology Co., Ltd.**, Jiangsu (CN)

(72) Inventor: **Stephen M. Saleen**, Irvine, CA (US)

(73) Assignee: **Jiangsu Saleen Automotive Technology Co., Ltd.**, Jiangsu (CN)

(**) Term: **15 Years**

(21) Appl. No.: **29/632,257**

(22) Filed: **Jan. 5, 2018**

(51) **LOC (11) Cl.** **12-16**

(52) **U.S. Cl.**
USPC **D12/209**

(58) **Field of Classification Search**
USPC D12/204–213; D21/533, 551, 563
See application file for complete search history.

(56) **References Cited**

U.S. PATENT DOCUMENTS

D390,180	S	*	2/1998	Dehner	D12/209
D501,441	S	*	2/2005	Rosenbohm	D12/211
D538,731	S	*	3/2007	Iwauchi	D12/211
D655,660	S	*	3/2012	Stucki	D12/209
D701,813	S	*	4/2014	Kern	D12/211
D717,711	S	*	11/2014	Kern	D12/211
D726,089	S	*	4/2015	Hodges	D12/211
D737,189	S	*	8/2015	Claunch	D12/209
D744,928	S	*	12/2015	Valencia Pollex	D12/209
D800,633	S	*	10/2017	Kong	D12/211
D802,512	S	*	11/2017	Kong	D12/211
D806,629	S	*	1/2018	Bridan	D12/211
D807,270	S	*	1/2018	Zhao	D12/211
D823,219	S	*	7/2018	Lickliter	D12/209

OTHER PUBLICATIONS

Wei, X. "Supercar Maker Saleen Lands in China With New S1 Model" dated Dec. 8, 2017, available at https://www.yicaiglobal.com/news/supercar-maker-saleen-lands-china-new-s1-model.

* cited by examiner

Primary Examiner — Sheryl Lane
(74) *Attorney, Agent, or Firm* — Fox Rothschild LLP

(57) **CLAIM**

The ornamental design for an automobile wheel face, as shown and described.

DESCRIPTION

FIG. **1** is a left perspective view of an automobile wheel face showing my new design;
FIG. **2** is a right perspective view thereof;
FIG. **3** is a front elevation view thereof; and,
FIG. **4** is a side elevation view thereof.
In the drawings, the broken lines shown in FIGS. **1-4** indicate portions of the article not claimed and form no part of the claimed design.

1 Claim, 4 Drawing Sheets

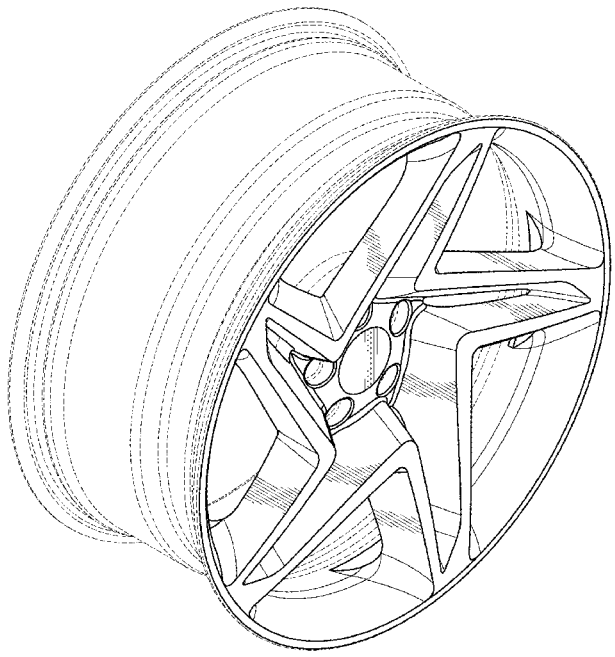

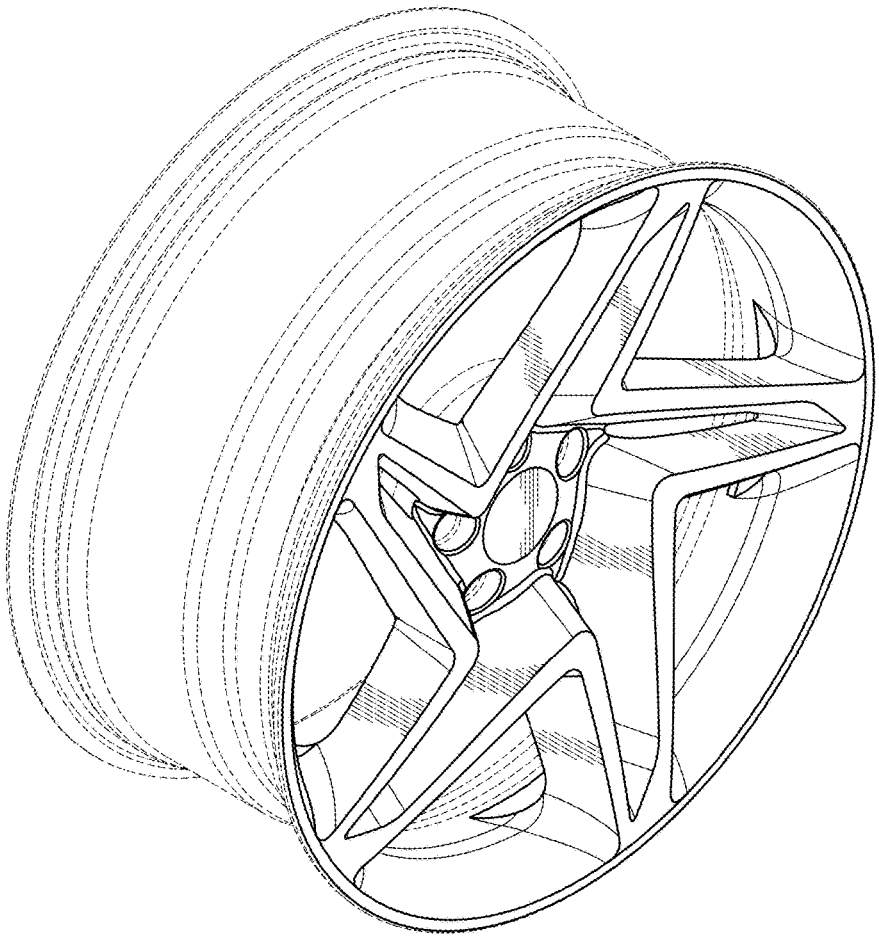

FIG. 1

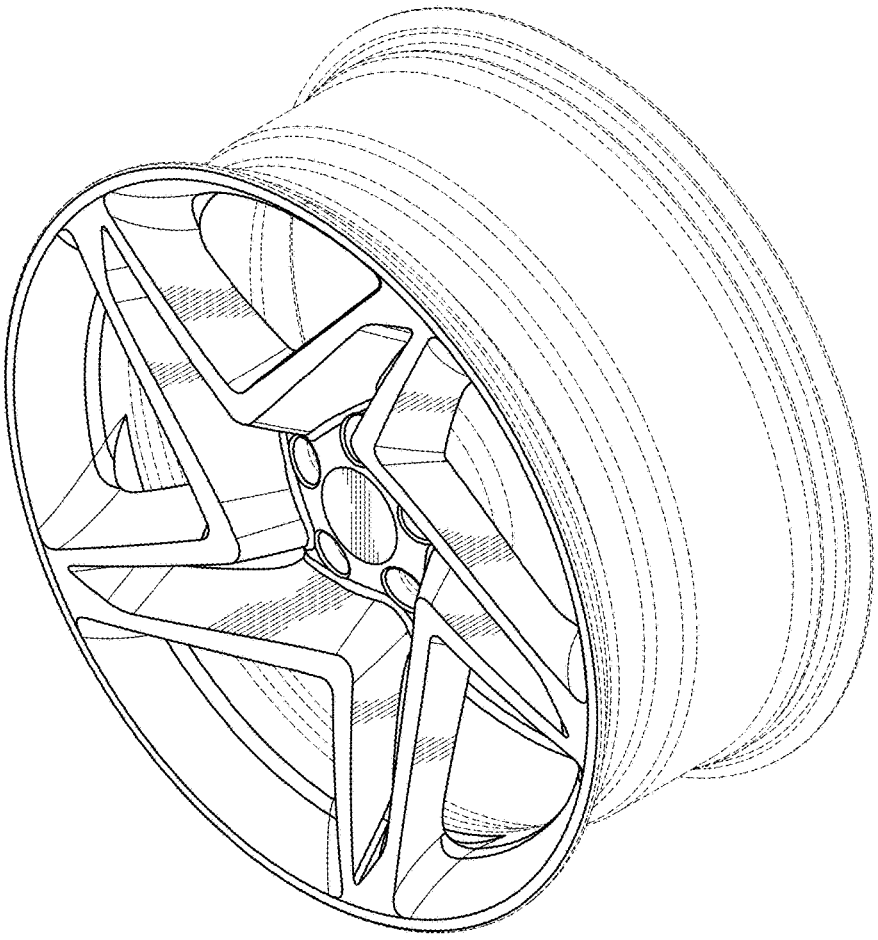

FIG. 2

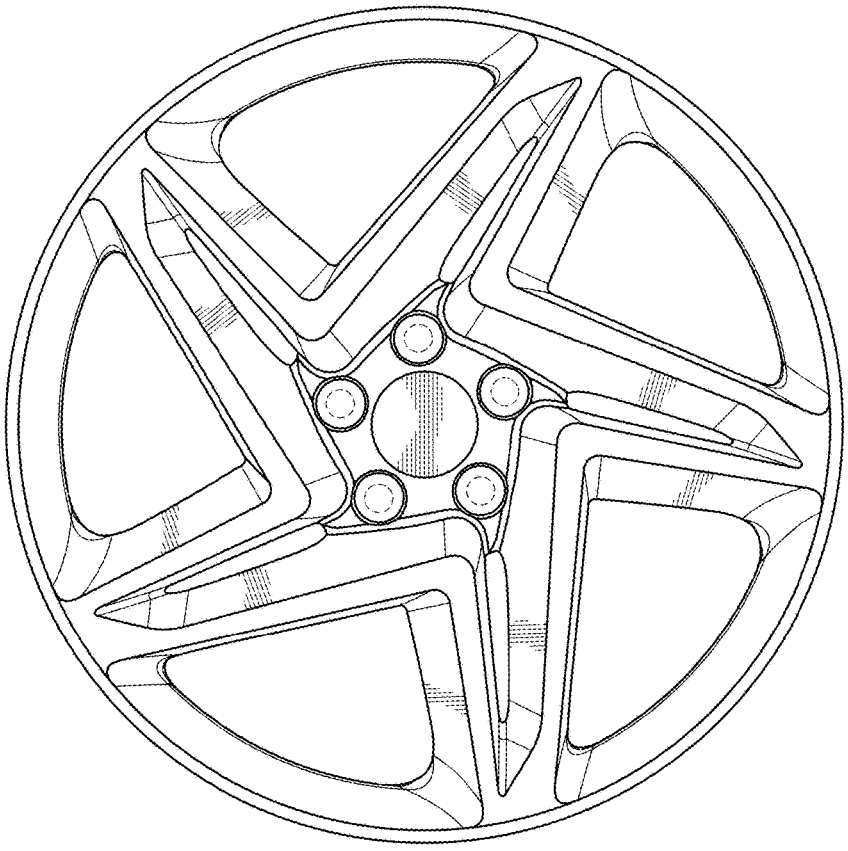

FIG. 3

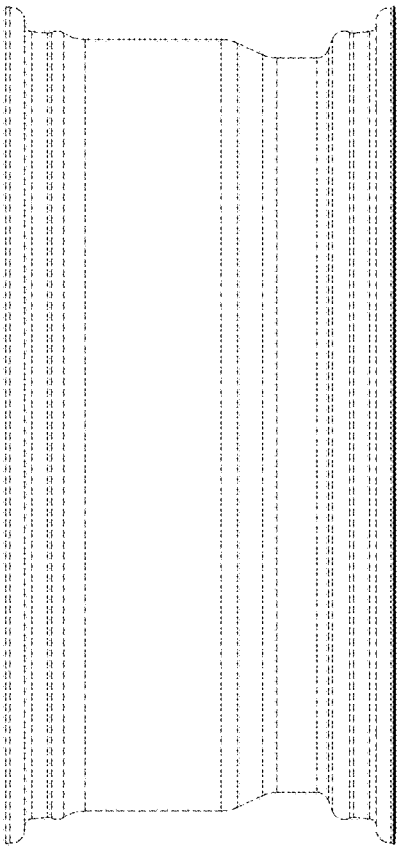

FIG. 4