March 31, 1970 W. LOEBNER 3,503,525

COLLAPSIBLE RACK

Filed Aug. 16, 1968 2 Sheets-Sheet 1

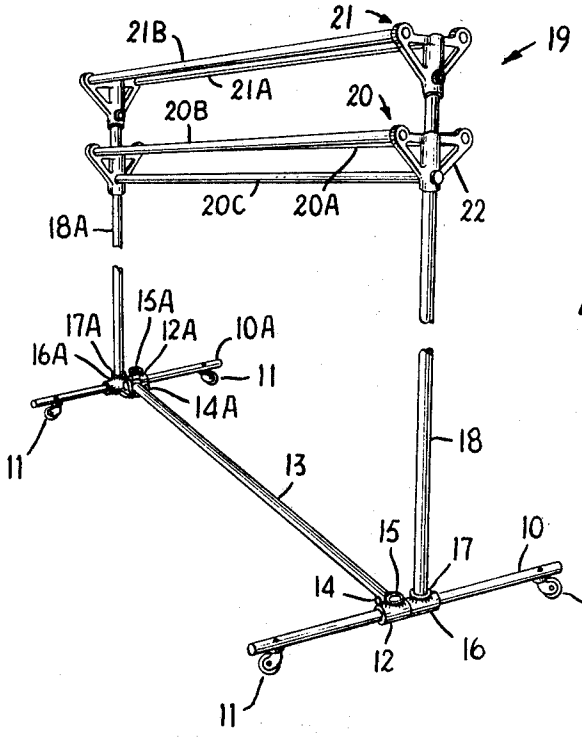

FIG. 1

FIG. 2

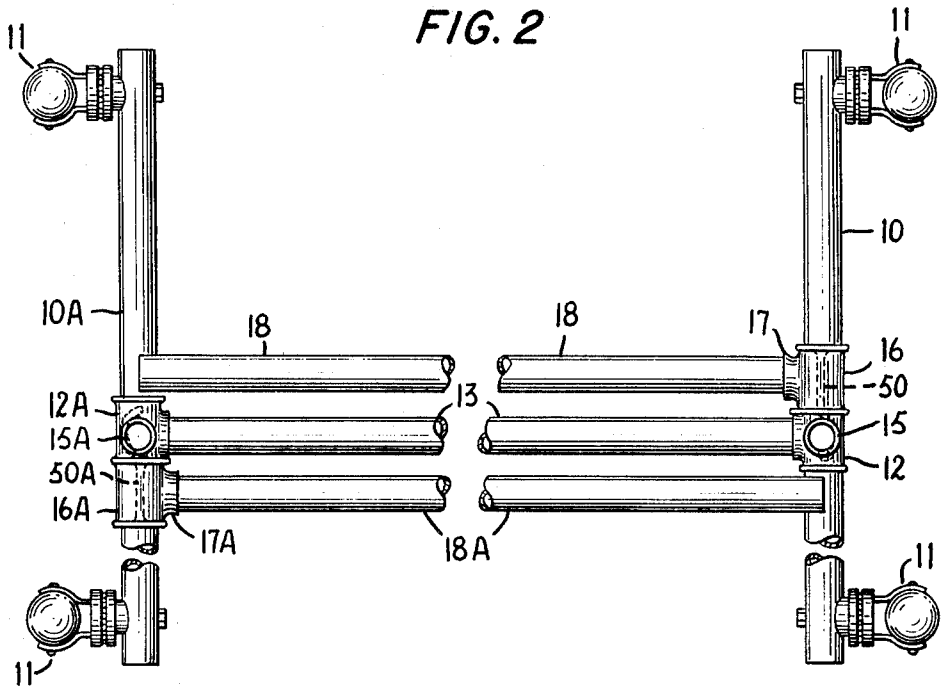

March 31, 1970 W. LOEBNER 3,503,525

COLLAPSIBLE RACK

Filed Aug. 16, 1968 2 Sheets-Sheet 2

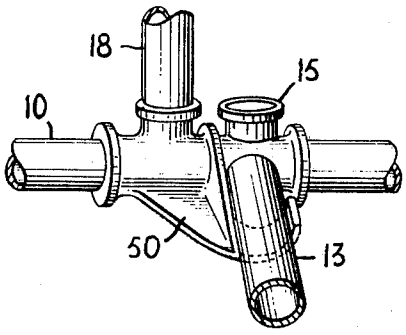

FIG. 3

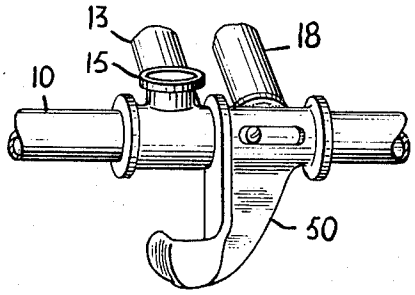

FIG. 4

FIG. 5

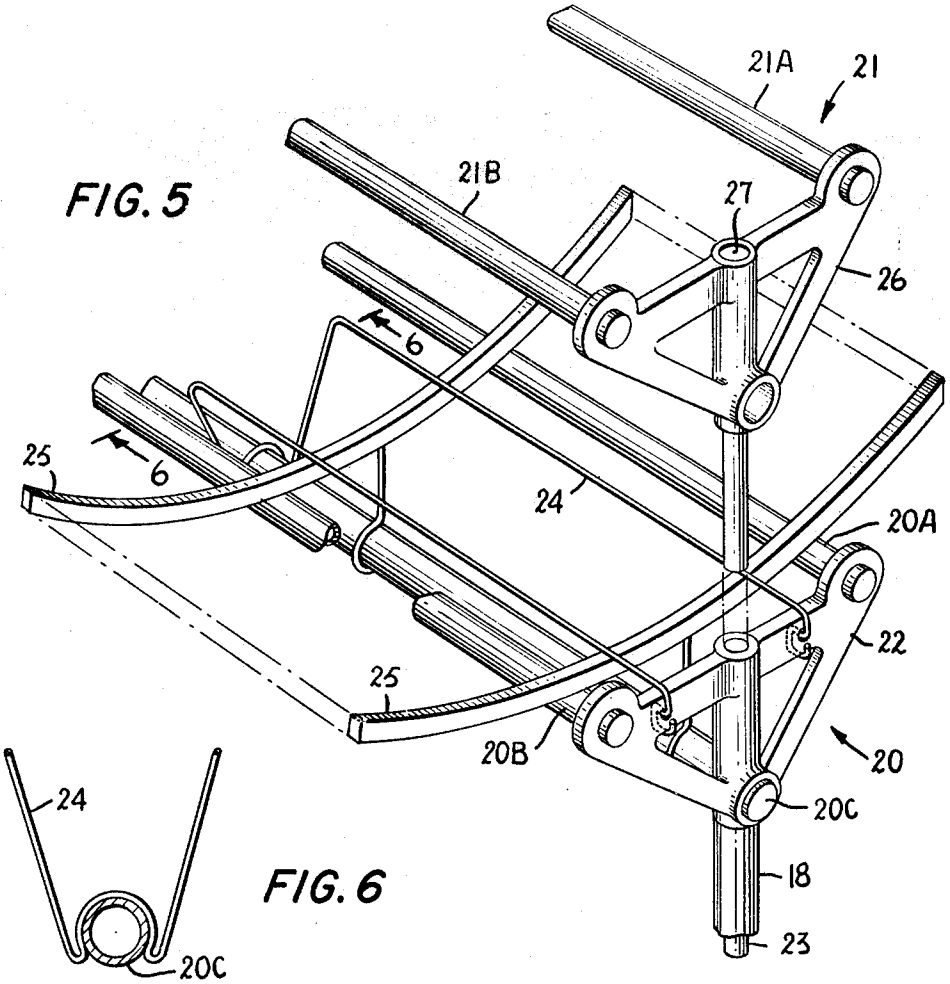

FIG. 6

United States Patent Office

3,503,525

Patented Mar. 31, 1970

3,503,525

COLLAPSIBLE RACK

William Loebner, 220 W. 98th St.,
New York, N.Y. 10025

Filed Aug. 16, 1968, Ser. No. 753,224
Int. Cl. A47f 7/24, 5/13
U.S. Cl. 211—177 5 Claims

ABSTRACT OF THE DISCLOSURE

A collapsible rack comprising a pair of horizontal support bars which have vertical support bars mounted on them and a top horizontal hanger support mounts on and between the vertical support bars and can be removed from it. When this top horizontal hanger support unit is removed from the vertical support bars, the vertical support bars may be folded inward coplanar with the horizontal bars and the hanger support unit may then be secured to the horizontal bars, folding into a compact portable array. A wire brace is used to lock ordinary coat hangers in place to the hanger support.

Present coat racks are bulky objects to move around. Collapsible ones often require bolts, nuts, wrenches or various threaded members to unfold and collapse into a small compact unit.

It is therefore an object of this invention to have a portable coat rack which folds up into a complete compact unit without the use of any tools whatsoever.

It is another object of this invention to have a compact portable coat rack which rigidly secures any hangers thereon in place for ease of transportation.

Another object of this invention is to have a hanger support assembly of modular construction so that any desired number may be stacked up on the rack. In brief, the invention has vertical supports operable between a raised position and a collapsed position. In the first position a hanger support mounts on the vertical supports while in the second position the hanger support mounts to a pair of parallel bars used as a base to achieve a compact portable structure.

Other objects, features and advantages will become more apparent from the claims taken in conjunction with the following description and drawings in which:

FIG. 1 is an isometric view of a completely assembled rack;

FIG. 2 is a top view of a folded rack without the top horizontal support yet in place;

FIG. 3 is an isometric view of two T's of the invention with the invention fully unfolded;

FIG. 4 is a back view of the same two T's with the invention fully folded;

FIG. 5 is an isometric view of the hanger support assembly ready to be secured to the bottom section;

FIG. 6 is a close-up side view in section of the wire locking means used to secure the hangers to the hanger support means when the device is to be collapsed.

FIG. 1 shows two parallel horizontal support bars **10**, **10A** with casters **11** located at the ends of each support bar. A first pair of T's **12**, **12A** each have two stem bores, **14**, **14A** and **15**, **15A**. These T's are frictional rotatably mounted on the horizontal bars **10**, **10A** respectively, by their through bores. A horizontal brace **13** is received by the first set of stem bores **14**, **14A** respectively in the first T's. A second pair of T's **16**, **16A** have the bars **10**, **10A** irrotationally going through the through bores. These T's **16**, **16A** have but one stem bore a piece, numbered **17** and **17A**. A pair of parallel vertical supports **18**, **18A** fit into the stem bores **17**, **17A**, respectively, and are in a first open raised position. A top horizontal

hangar support indicated generally by the numeral **19** fits into the parallel supports **18**, **18A**. The hanger support **19** consists of modulator sub-units namely, a coat support **20** and a hat support **21**.

FIGS. 5 and 6 show in more detail one end of each of the subassemblies **20**, **21**. The assembly **20** consists of three horizontal parallel bars **20A**, **20B**, **20C** secured by a bracket **22**. A projection **23** secured to the bracket **22** fits into the support **18**. A locking means or wire clamp **24** is secured at one end to the bracket **22** and at its other end clamps around the tube **20C** as clearly shown in FIG. 6. The several hangers **25** will then be locked against tubes **20A**, **20B**. This is the compact folded mode of the invention with the hangers **25** locked. When in use, the clamp **24** would be unclamped from the tube **20C** and allowed to hang free along the outside of the bracket **22**. The hangers **25** would then hang down loose being supported by tube **20C** in the normal manner. The unit **21** consists of an end bracket **26**, which fits into the top of the bracket **22** by the projection **90**. A hole **27** in the brackets **26** could receive another subassembly in modular fashion and so on indefinitely. The tubes **21A**, **21B** fit into the bracket **26** and are convenient for use as a hat rack.

FIG. 1 shows the invention in the fully assembled raised position. To collapse it the first step would be to remove the top horizontal hanger support **19** from the tubes **18**, **18A**. Then, the vertical supports **18**, **18A** would be folded inwardly until they lay flat, horizontally with the tubes **10**, **10A** in a collapsed position as is shown in FIG. 2. Note, that casters **11** are now also a coplanar with horizontal bars **10**, **10A**; this is due to the beforementioned irrotational coupling between T's **16**, **16A** and bars **10**, **10A** respectively which have the effect of rotating casters **11** flat, when vertical supports **18**, **18A** are rotated to a lowered position. Then, hangers **25** would be inverted and wire clamp **24** snapped around onto tube **20C** to secure hangers **25** in place. Then, top horizontal hanger support **19** would be plugged into stem bores **15**, **15A**. A strap not shown may be added around the middle section of brace **13** securing vertical supports **18**, **18A** in place. The entire unit may now be easily carried by one hand from preferably the middle of bar **20C** this will be over the center of gravity of the system.

To set up the invention for use the above steps would be reversed. It should be noted that in opening out supports **11**, **11A**, **18**, **18A** the beforementioned frictional engagement of them with bars **10**, **10A** will prevent them from falling in until hanger support **19** is secured. FIG. 3 shows how hooks **50** prevent the supports **18** from falling outward (i.e. away from brace **13**) until the hanger support **19** is in place.

What I claim and desire to secure by Letters Patent is:

1. A collapsible rack comprising: a pair of parallel bars; first and second pairs of T's, first and second T's of each pair mounted by their respective through bores to respective first and second of said horizontal bars, one of said T pairs being rotatably mounted; a brace mounted at each end to the stem bores of said first pair of T's; a pair of supports each having a first end mounted to the respective stem bores of said second pair of T's; whereby said supports are operable between raised and collapsed positions; a top assembly removably mounted on the supports spanning the distance therebetween; whereby with said supports in said raised position said top assembly is removed and said supports folded to said collapsed position to achieve a compact array.

2. A collapsible rack as in claim **1** wherein said first pair of T's are rotatably mounted on said bars and said second pair of T's are fixedly mounted on said bars; and further comprising four casters each respectively mounted

to the four respective ends of the bars; and a pair of stops mounted to said second pair of T's respectively, perpendicular to the through bore-stem bore plane of each T; whereby said stops prevent further rotation of said supports keeping them in raised position for ease of attachment of said top assembly, and when said supports are rotated inwardly to said collapsed position said casters will be rotated into the plane of said bars to achieve a compact array.

3. A collapsible rack as in claim 1 wherein said first pair of T's each also have a second perpendicular bore, perpendicular to both said first perpendicular bore and said through bore, to receive said top assembly when said supports are fully folded in said collapsed position whereby a compact unit is formed convenient for carrying.

4. A collapsible rack as in claim 3 further comprising means for locking hangers in place onto said top assembly; whereby said locking means is engaged when said supports are folded to said collapsed position and said top assembly is secured to said first pair of T's producing a very compact rack.

5. A collapsible rack as in claim 1 wherein each top assembly comprises a plurality a stacked modular sub-units each capable of receiving another sub-unit stacked thereon.

References Cited

UNITED STATES PATENTS

812,344	2/1906	Howser	182—153
850,658	4/1907	Koonee	211—182 X
1,169,157	1/1916	Honold	211—182 X
2,919,816	1/1960	Maslow	211—182 X
3,341,028	9/1967	Nichols	211—182 X

FOREIGN PATENTS

361,268	5/1962	Switzerland.

DAVID J. WILLIAMOWSKY, Primary Examiner

WAYNE L. SHEDD, Assistant Examiner

U.S. Cl. X.R.

182—153; 248—188.6