Nov. 20, 1923. 1,474,457

L. C. WEINBERG ET AL

INTRAAIRPLANE MAIL TRANSFER

Filed June 29, 1921 3 Sheets-Sheet 1

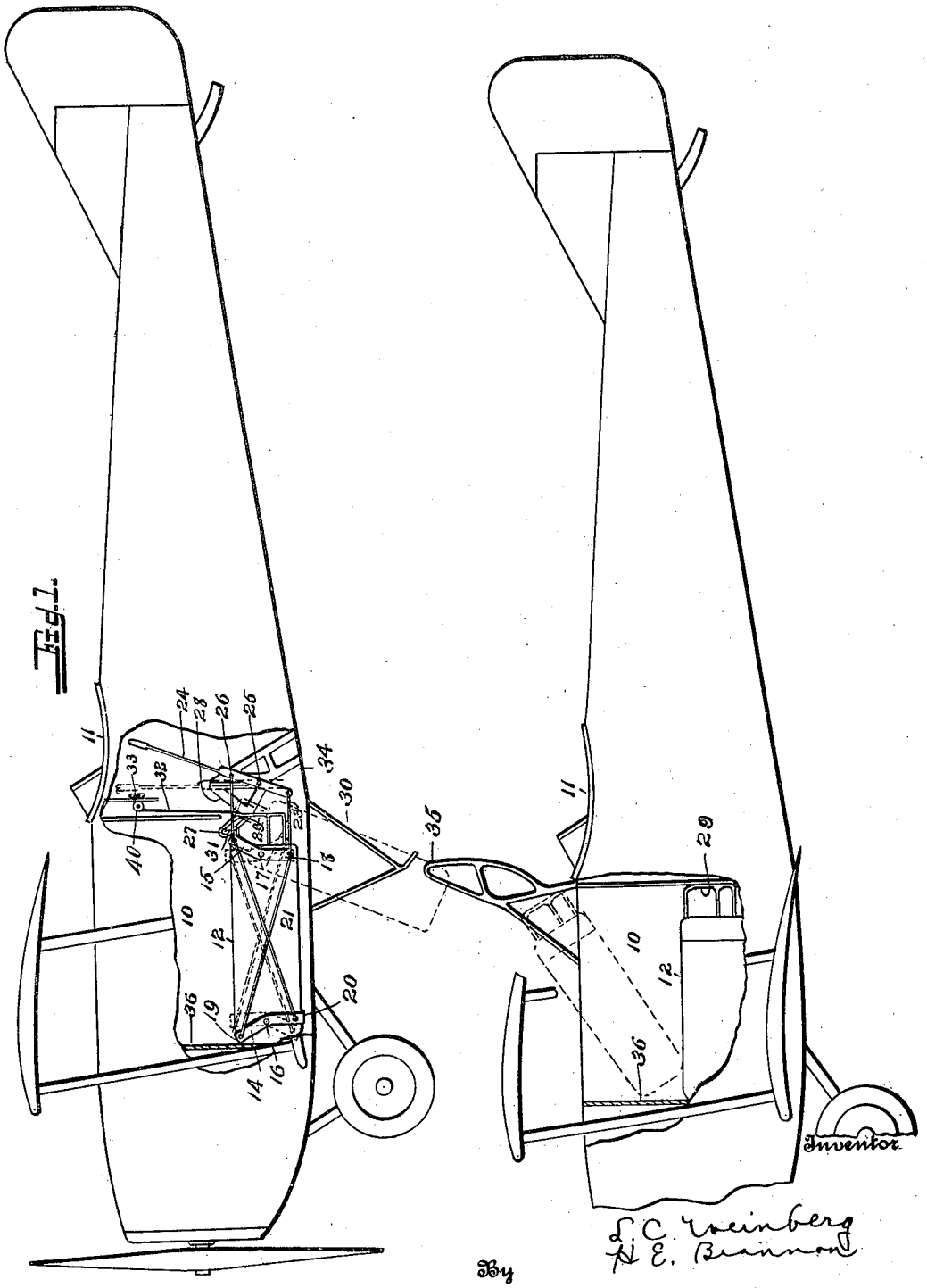

Inventor

L. C. Weinberg
H. E. Brannon

By Robt H Ewing. Attorney

Nov. 20, 1923.

1,474,457

L. C. WEINBERG ET AL.

INTRAAIRPLANE MAIL TRANSFER

Filed June 29, 1921 3 Sheets-Sheet 2

Fig. 3.

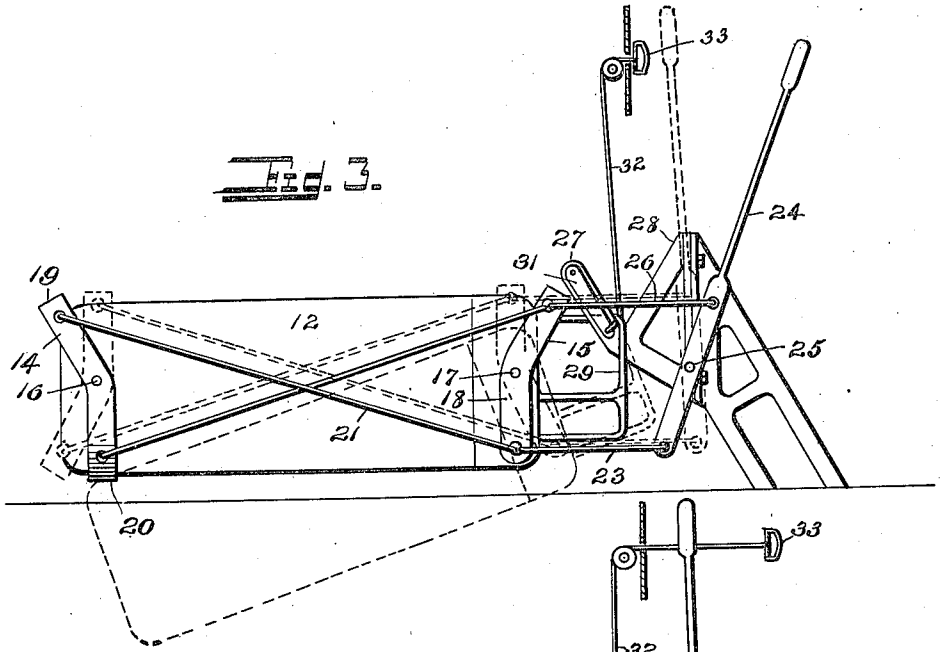

Fig. 4.

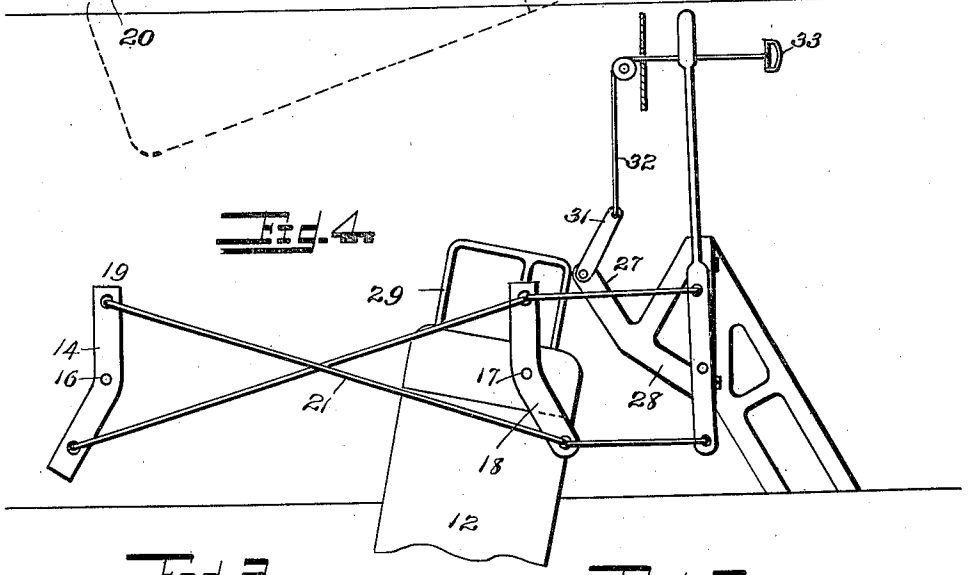

Fig. 2.

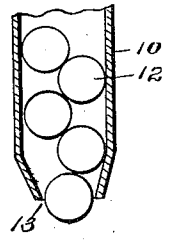

Fig. 5.

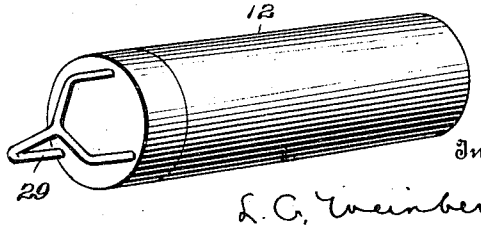

Inventor

L. C. Weinberg

H. E. Brannan

By Robert H. Young

Attorney

Nov. 20, 1923.

1,474,457

L. C. WEINBERG ET AL

INTRAAIRPLANE MAIL TRANSFER

Filed June 29, 1921

3 Sheets-Sheet 3

Fig. 6.

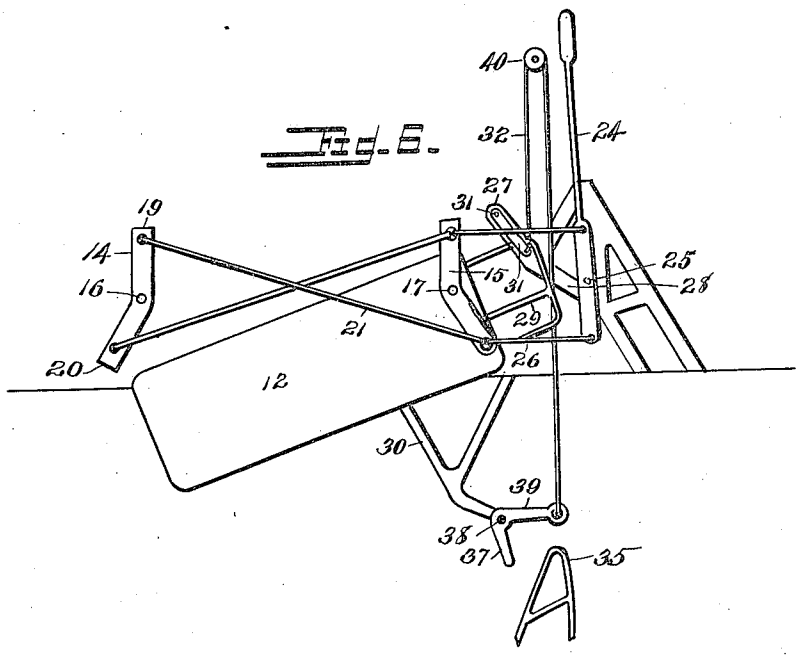

Fig. 7.

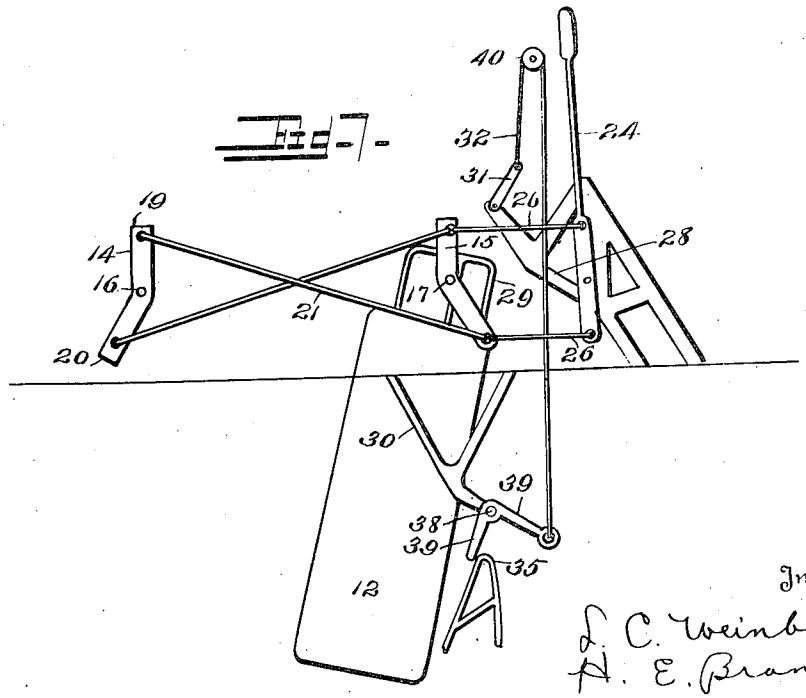

Inventor

L. C. Weinberg

A. E. Brannon

By Robt. N. Young.

Attorney

Patented Nov. 20, 1923. 1,474,457

UNITED STATES PATENT OFFICE.

LOWELL C. WEINBERG AND HERBERT E. BRANNON, OF DAYTON, OHIO.

INTRA-AIRPLANE MAIL TRANSFER.

Application filed June 29, 1921. Serial No. 481,378.

To all whom it may concern:

Be it known that we, LOWELL C. WEINBERG and HERBERT E. BRANNON, citizens of the United States, residing at Dayton, in the county of Montgomery and State of Ohio, have invented certain new and useful Improvements in Intra-Airplane Mail Transfers, of which the following is a specification.

Our invention relates to aircraft and in particular to means for transferring packages from one aircraft to another while in flight.

It is the primary object of the invention to provide an apparatus which may be mounted upon two or more airplanes, or other aircraft, and which may be used to transfer mail, express, or other articles from one ship to the other when two of them fly close together and assume certain relative positions suitable for the transfer of packages.

A further object is the provision of a transfer apparatus of this character which is capable of holding a number of packages and transferring any selected number of the packages from one ship to the other at the will of the pilot.

Another object is to provide a transfer apparatus which is of simple construction, which is absolutely reliable in operation, and which may be installed in an aircraft very conveniently and without occupying a great amount of space.

Other objects may appear as the following specific description is read in connection with the accompanying drawings, in which:—

Fig. 1 is a side elevation of two airplanes in flight showing the manner in which packages are transferred from one ship to the other;

Fig. 2 is a transverse sectional view through the package transfer apparatus of one ship;

Fig. 3 is a side view of the apparatus showing the same in the act of releasing one end of the package, or container;

Fig. 4 is a similar view showing the releasing mechanism in the act of finally releasing the entire package;

Fig. 5 is a perspective view of one of the packages;

Fig. 6 is a side elevation of a modified form of transfer apparatus, showing an automatic trip device in set position; and

Fig. 7 is a similar view, showing the trip device at the time of actuation.

The invention is shown applied to an airplane, but its use upon dirigibles and other air craft is also contemplated.

Referring to the drawings and particularly to Fig. 1, it will be observed that it is intended in the present instance, at least, to transfer packages between ships when one is flying directly above the other and in the same direction. By flying both at substantially the same speed, this can be effected easily, provided the pilots have acquired skill in this operation. By having the discharging ship fly above the receiving ship, transfer may be accomplished by utilization of the force of gravity instead of requiring any kind of elevating or hoisting device.

The method of transfer just outlined may be practiced by the use of the specific apparatus disclosed in the present drawing, but it is to be understood that various modifications in construction or substitutions of parts may be made within the scope of the appended claims.

Turning to Fig. 2, the numeral 10 designates a narrow compartment which may be mounted within the fuselage of the airplane at any convenient location with respect to the pilot's cock-pit 11. The side walls of this compartment serve as guides for the cylindrical packages or containers 12, and are spaced apart sufficiently to permit the staggered arrangement of packages shown in Fig. 2 without danger of jamming. The lower end of the compartment is constricted as shown to provide a discharge opening, or mouth, just large enough to permit the discharge of one package at a time.

The transfer apparatus may be identical in all the ships as shown. It therefore includes both releasing and receiving mechanism.

The releasing mechanism will first be described. Near the bottom of the compartment 10 and adjacent to both ends of its narrow mouth, two slings 14 and 15 are pivotally mounted on transverse axes 16 and 17 respectively. For the sake of convenience, sling 14 may be termed the front sling and 15 the rear sling. The rear sling is in the form of a yoke with a depending arm 18. The front sling, however, includes both upper and lower package engaging portions 19 and 20 respectively. The upper engaging portion of the front sling is angularly disposed with respect to the lower engaging portion, and the former is connected by means of connecting rod 21 to the depending arm 18 on the rear sling. This arm 18 is in turn connected by

connecting rod 23 to a hand lever 24 at a point below its pivot 25. A connecting rod 26 extends from the lever at a point above its pivot to the lower engaging portion 20 of the front sling 14.

The arrangement of both slings and their mode of connection to the hand lever are such that manipulation of the latter may serve to bring the upper engaging portions of both slings and the lower engaging portion of the front sling alternately into the path of the packages in compartment 10. When the upper engaging portions of both slings are located in operative position within the path they will be in position to engage the lowermost package of a series so as to support the packages. This position of the hand lever and slings is represented in dotted lines in Fig. 3. When the lever is in the full line position of Fig. 3, the upper engaging portions of the slings will be in inoperative position and will thus permit the train of packages to descend one step and thus bring one into engagement with the lower engaging portion 20 of sling 14. Since only the front end of this package will be supported by the sling, means must be provided for supporting the other end.

It is desirable to suspend a package about to be transferred to another ship in the angularly disposed position shown at the top of Fig. 1. It is proposed to support the rear end of the lowermost package by a device which will permit the package to turn on its rear end as a pivot upon release of the front end. For this purpose a stationary hook 27 projects upwardly into the path of the packages from a bracket 28, and each package is provided on the end intended to be disposed rearmost in the compartment 10 with a triple loop 29 of such construction that it cannot avoid the hook 27 as it descends to the mouth of the compartment. The hook is certain to become engaged with some part of the loop.

It will be evident that a package which drops into contact with the lower engaging portion 20 of the front sling, at its front end, must also become engaged at its rear end with hook 27. Then, when the hand lever is thrown by the pilot into the dotted line position of Fig. 3 and the front end of the package is thereby released, the rear end will still be engaged with the hook and will thus cause the package to swing into the inclined position represented in Fig. 1. An inclined guide bracket 30 is adapted to project beneath the fuselage of the transferring ship into the position shown in Fig. 1 for contact with each package when it is in the inclined position shown preliminary to actual discharge into the receiving compartment of the other ship. This guide bracket is mounted in such a manner as to be capable of retraction into the fuselage when not desired for immediate use.

In order to provide means for finally releasing the rear end of the package about to be discharged, a trip lever 31 is pivotally connected to the hook 27 at its free end. While any convenient means may be employed to operate the trip lever 31, a string or other flexible member 32 may be connected to its lower end and extended into the pilot's cock-pit for connection to a handle 33, by which it may be pulled into the position of Fig. 4. When thus pulled, it will swing upwardly into the dotted line position and, in so doing, force the loop of the package off the hook, thereby releasing the package entirely.

The bottom of the pilot's cock-pit should be provided with an observation window 34 in order that the pilot may observe the receiving ship and regulate the position of his own ship accordingly.

In order to facilitate accurate transfer of a package from the discharging ship into the receiving ship, each ship is provided with a retractible guide bracket 35 mounted at the upper end of the compartment 10 and at the rear edge of the latter. When in the operative position shown in Fig. 1, it will project above the fuselage of the receiving ship to such an extent that, when it nearly touches the lower end of the guide bracket 30 of the other ship, the pilot of the latter will know that both ships are in the proper relative positions for transfer. Looking through his observation window 34, he can determine when this adjustment has been attained and may pull the handle 33 at this time to cause the package in discharge position to descend along guide brackets 30 and 35 into the receiving compartment 10 of the lower ship.

In order to make the operation of transferring a package from one airplane to another clear, the successive steps will be described in the order in which they will occur in practice. Let it be assumed that the compartment of one ship contains several packages, one of which is to be transferred to another ship in flight. This particular package must be situated at the bottom of the series. Assuming also that the hand lever 24 is in the full line position of Fig. 3 and that the desired package is in the position shown in that figure, the pilot of the transferring or discharging airplane pilots his ship into position above the receiving ship and moving in the same direction and at substantially the same air speed. The pilot of the receiving ship raises his guide bracket 35 and the pilot of the discharging ship lowers his guide bracket 30 and moves hand lever 24 forward into the dotted line position (Fig. 3). This causes the package to be transferred to swing into the dotted

line position of Fig. 1, in contact with guide bracket 30. Looking down through the observation window 34, the pilot of the discharging ship watches the guide bracket of his ship and regulates his speed so that his guide bracket gradually approaches the guide bracket 35 of the receiving ship. When these brackets are finally in registration and the package can be discharged with safety along the guide bracket 35, he pulls handle 33 and allows the package to drop. It slides into the compartment of the receiving ship in the manner represented in dotted lines in Fig. 1. Should it be desired to transfer more than one package, the operations of lever 24 and handle 33 are repeated the required number of times. In either event, when the transfer has been accomplished, the guide brackets of both ships are retracted and they proceed on their routes of flight. With practice, transfer of packages from one ship to another by the use of this apparatus may be performed quickly and accurately.

In order to absorb the shock of impact when a package is dropped into the compartment of the receiving ship, a shock-absorbing bulkhead 36 is provided at the front of the compartment. Falling packages will be deflected against this bulkhead by guide bracket 35 before dropping onto the floor of the compartment or onto other packages lying thereon.

The apparatus which has been described requires manual operation by the pilot of the discharging ship. In anticipation of developments which may render automatic operation desirable, a modified form of the apparatus capable of such operation is disclosed in Figs. 6 and 7. In this instance, a trigger 37 is pivoted at 38 on the free end of guide bracket 30 of the discharing ship's apparatus. This trigger is adapted to project below the guide bracket for contact with the upstanding guide bracket of the receiving ship when both ships are in position for accurate transfer of packages. An arm 39 projects from the trigger at an angle thereto. Instead of having the flexible member 32 lead to a handle, as shown in Figs. 1, 3 and 4, it is extended over a pulley 40 and connected to arm 39 of the trigger. Actuation of the trigger will thus serve to throw trip lever 31 and release a package in the inclined discharging position of Fig. 6.

Fig. 6 shows the trigger of the transfer apparatus on a discharging ship about to be struck by the upper guide bracket of the receiving ship. In Fig. 7, the position of parts after a package has been automatically released is indicated. The use of automatic trip mechanism may be found preferable. In its use, the pilot of the rceiving ship, who has a better view of the transfer apparatus than the other pilot, controls the release operation by regulation of the speed and direction of flight of his ship. This should insure greater accuracy of transfer.

We claim:

1. In apparatus for transferring packages by gravity from one aircraft to another while both are in flight, means for supporting a package at relatively spaced points, and means for releasing each supporting means independently of the other.

2. In apparatus for transferring packages by gravity from one aircraft to another while both are in flight, means for supporting a package on one aircraft, and means whereby said package may be partially released and permitted to assume a discharging position prior to its complete release.

3. In apparatus for transferring packages by gravity from one air craft to another while both are in flight, means for supporting a package at relatively spaced points including a hook, and a trip device for forcing the package off said hook.

4. In apparatus for transferring packages by gravity from one aircraft to another while both are in flight, a plurality of supporting slings for a package, means for moving one of said slings out of supporting position to permit one end of the package to swing downwardly, and means for subsequently releasing the package.

5. In apparatus for transferring packages by gravity from one aircraft to another while both are in flight, a plurality of supporting slings for a package, means for moving one of said slings out of supporting position to permit one end of the package to swing downwardly, means for subsequently releasing the package, and means for guiding the package during the initial portion of the discharge movement thereof.

6. In apparatus for transferring packages by gravity from one aircraft to another while both are in flight, an inclined guide for holding the package in a slanting position before it is released.

7. In apparatus for transferring packages by gravity from one aircraft to another while both are in flight, a package receiving compartment having a shock absorbing wall, and means projecting above said compartment for guiding the package downwardly toward said wall.

8. In an apparatus for transfering packages from one aircraft to another in flight, a pair of package-holding slings movably mounted, one sling having an upper engaging portion and a lower engaging portion each adapted to be disposed in operative position when the other is in inoperative position, the other sling having a single engaging portion adapted to cooperate with the upper engaging portion of the first sling, means by which the slings may be adjusted to move the cooperating engaging portions

of both into operative position and inoperative position alternately, package engaging means adapted to engage a package when in engagement with the lower engaging portion of the first sling, and independently operable means by which the said engaging means may be released.

9. In combination with an aircraft fuselage, means for facilitating the transfer of an object by gravity from one aircraft to another, comprising a guide projecting downwardly from the fuselage and adapted upon release of the object to direct the same along a given path.

10. In combination with an aircraft fuselage, means for facilitating the transfer of an object by gravity from one aircraft to another, comprising a guide projecting downwardly from the fuselage and adapted upon release of the object to direct the same along a given path, said guide being retractible.

11. In combination with an aircraft fuselage, means for facilitating the transfer of an object by gravity from one aircraft to another, comprising a guide projecting upwardly from the fuselage and adapted upon release of the object to direct the same along a given path.

12. In combination with an aircraft fuselage, means for facilitating the transfer of an object by gravity from one aircraft to another, comprising a guide projecting upwardly from the fuselage and adapted upon release of the object to direct the same along a given path, said guide being retractible.

In testimony whereof we have affixed our signatures.

LOWELL C. WEINBERG.
HERBERT E. BRANNON.