May 24, 1966 R. L. KONOPA 3,253,163

SEMICONDUCTOR INTERNAL COMBUSTION ENGINE IGNITION SYSTEM

Filed Dec. 20, 1963

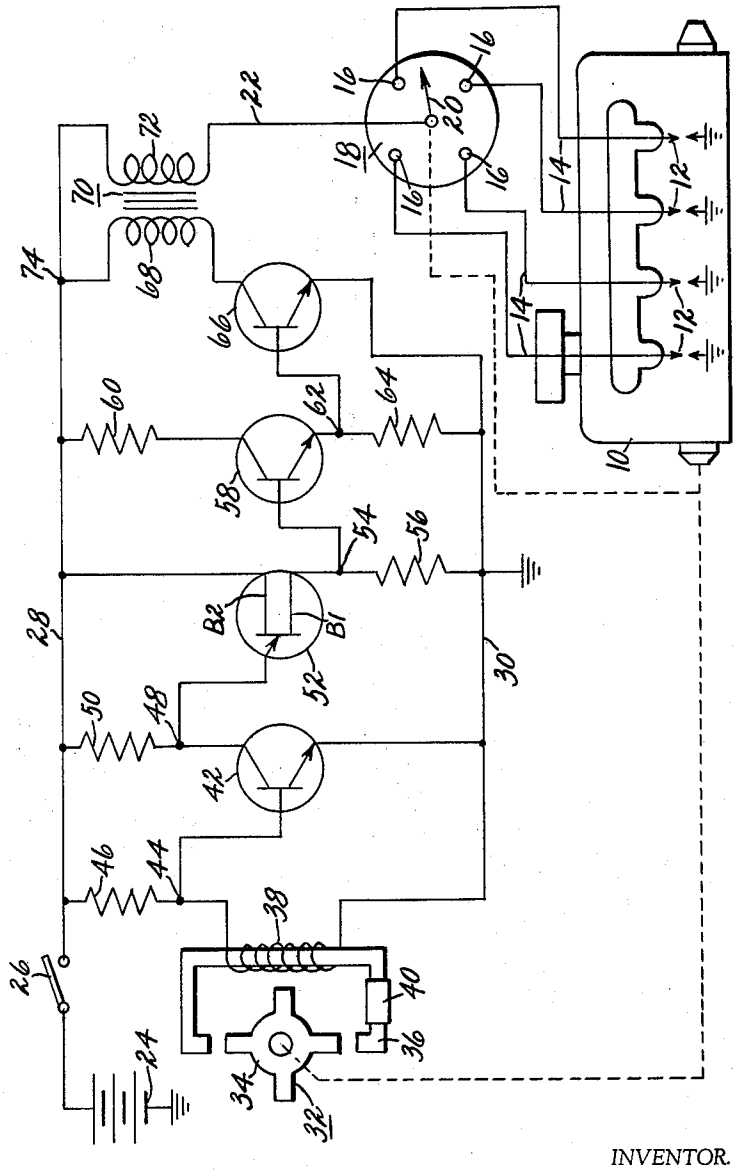

INVENTOR.
RICHARD L. KONOPA

BY C. R. Meland

HIS ATTORNEY

United States Patent Office 3,253,163 Patented May 24, 1966

3,253,163

SEMICONDUCTOR INTERNAL COMBUSTION ENGINE IGNITION SYSTEM

Richard L. Konopa, Anderson, Ind., assignor to General Motors Corporation, Detroit, Mich., a corporation of Delaware

Filed Dec. 20, 1963, Ser. No. 332,012
9 Claims. (Cl. 307—88.5)

This invention relates to a semiconductor internal combustion engine ignition system and more particularly to an ignition system that uses a unijunction transistor as an active element in the ignition system.

The ignition system to be described is in some respects similar to the ignition ssytems shown in the Konopa Patent 3,087,090, and in the Short et al. Patent 3,087,001.

The above-mentioned Konopa and Short, et al. patents disclose semiconductor ignition systems wherein a transistor controls primary winding current. In these systems, resistor-capacitor coupling is used between certain transistor stages. Although the systems illustrated in Short, et al. and Konopa perform satisfactorily, it has been found that improved low-speed triggering can be achieved if the triggering of the system can be made independent of the rate of change of magnetic pick-up voltage.

It accordingly is one of the objects of this invention to provide a semiconductor ignition system wherein improved triggering of the system is achieved at low engine speeds.

Another object of this invention is to provide a semiconductor ignition system wherein the amount of voltage required to trigger the system is decreased as compared to known systems.

Still another object of this invention is to provide a transistor ignition system which includes a plurality of transistors and wherein at least one of these transistors is a unijunction transistor.

Another object of this invention is to provide a transistor ignition system of the breakerless type which uses a plurality of transistors one of which is a unijunction transistor.

Further objects and advantages of the present invention will be apparent from the following description, reference being had to the accompanying drawings wherein preferred embodiments of the present invention are clearly shown.

The single figure drawing is a schematic circuit diagram of an ignition system made in accordance with this invention.

Referring now to the drawing, the reference numeral **10** designates an internal combustion engine having a plurality of spark plugs **12**. The spark plugs are connected with conductors **14** which in turn are connected with the electrodes or inserts **16** of a distributor cap **18**. The electrodes **16** are insulated from each other by the insulating material of the distributor cap and these electrodes or inserts cooperate with a rotor contact **20** which is driven by the engine **10** and which serves to distribute spark energy to the electrodes **16** from a conductor **22**.

The source of direct current for the ignition system takes the form of a battery **24**, one side of which is grounded. The opposite side of the battery is connected with an ignition switch **26** and when switch **26** is closed, battery voltage is applied across power supply conductors **28** and **30**. It will be appreciated that on a motor vehicle, the conductors **28** and **30** can also be supplied by a generator which has a direct current output.

The control mechanism for controlling ignition firing is a magnetic pick-up generally designated by reference numeral **32**. This magnetic pick-up has a rotor **34** that is formed of magnetic material. The rotor **34** and the rotor contact **20** are synchronized in their rotation and are both driven by the engine **10**.

The rotor **34** has four arms which rotate relative to a U-shaped part **36** which is formed of magnetic material. A pick-up coil **38** is wound on one leg of the U-shaped part and a permanent magnet **40** is provided for causing a flowing of magnetic flux through the U-shaped part when the pole tips of the rotor **34** are aligned with the ends of the U-shaped part. It will be appreciated that as the rotor **34** rotates, pulses of voltage are induced in the pick-up coil **38** which have a predetermined spacing. The frequency of these pulses of voltage depends upon the speed of rotation of the rotor **34** and therefore depends upon engine speed. The pulses of voltage go positive and negative with periods of no voltage output between the positive and negative pulses.

The ignition system has an NPN transistor **42**. The base of transistor **42** is connected with junction **44** located between pick-up coil **38** and resistor **46**. The resistor **46** and the pick-up coil **38** are connected in series across power conductors **28** and **30**.

The emitter of transistor **42** is connected directly with grounded conductor **30** whereas the collector of transistor **42** is connected with junction **48**. A resistor **50** connects the junction **48** and the power conductor **28**.

The junction **48** is connected with the emitter of a unijunction transistor **52**. This unijunction transistor has a base B_2 and another base B_1. The base B_2 of the unijunction transistor is connected with power conductor **28**. The base B_1 of the unijunction transistor is connected with junction **54** and this junction is conected to power conductor **30** by a resistor **56**.

The unijunction transistor as is known to those skilled in the art, can be formed from a silicon bar which has spaced ohmic contacts which are connected with the base B_2 and the base B_1. The emitter electrode is connected with a junction on the silicon bar. The characteristics of this transistor are such that the resistance between the emitter and the base B_1 decreases as the emitter current increases.

The junction **54** is connected with the base of an NPN transistor **58**. A resistor **60** connects the collector of transistor **58** with power conductor **28**. The emitter of transistor **58** is connected with junction **62**. A resistor **64** is connected between junction **62** and the grounded power conductor **30**.

The junction **62** is connected with the base of an NPN transistor **66**. The emitter of transistor **66** is connected to power conductor **30** while the collector of transistor **66** is connected to one side of the primary winding **68** of an ignition coil designated by reference numeral **70**. The opposite side of the primary winding **68** is connected with conductor **28** at junction **74**.

The secondary winding of the ignition transformer is designated by reference numeral **72**. One side of this secondary winding is connected with junction **74** and therefore to one side of the primary winding **68**. The opposite side of the secondary winding **72** is connected to the conductor **22** to feed the spark plugs **12** via rotor contact **20**, electrodes **16**, and spark plug leads **14**.

When the ignition switch **26** is closed, the voltage of the direct current source **24** is impressed across conductors **28** and **30**. If the engine **10** is now being cranked by a starting motor or if it is running, the rotor **34** will rotate and a train of voltage pulses will be induced in the pick-up coil **38**.

When there is no voltage induced in the pick-up coil **38**, the voltage at junction **48** and on the emitter of unijunction transistor **52** is sufficient to cause the unijunction transistor **52** to conduct. Transistor **42** at this time is slightly conductive since its base is biased positive with respect to its emitter by source **24** and the voltage at junction **48** is sufficiently positive to bias transistor **52** conductive due to the voltage developed across slightly

conductive transistor **42**. With unijunction transistor **52** conductive, the junction **54** is positive with respect to conductor **30** and transistor **58** is therefore biased to a conductive condition between its collector and emitter. Since transistor **58** is conductive, the junction **62** will be positive with respect to conductor **30** and this applies a forward bias to transistor **66** to switch it on between its collector and emitter. Since transistor **66** is conductive, current can flow from conductor **28**, through primary winding **68** and through the collector-emitter circuit of transistor **66** to the negative grounded conductor **30**.

To summarize, it is seen that with no voltage pulse induced in the pick-up coil **38**, transistor **42** is slightly conductive and transistors **52**, **58** and **66** are all biased to a conductive condition.

When a voltage of the proper polarity is induced in pick-up coil **38**, the base of transistor **42** is driven more positive than its emitter and is driven more positive than the bias it receives from battery **24** when no voltage is induced in pick-up coil **38**. This increases the conduction of transistor **42** in its collector-emitter circuit and the voltage drop across resistor **50** tends to drive the junction **48** negative with respect to conductor **28**. The voltage of junction **48** falls to a point where the unijunction transistor **52** now becomes nonconductive. When this happens, the voltage of junction **54** is reduced to a point where transistor **58** becomes nonconductive in its collector-emitter circuit. When transistor **58** goes nonconductive, the voltage of junction **62** approaches that of conductor **30** and the transistor **66** is therefore now biased to a nonconductive condition. When transistor **66** shuts off in its collector-emitter circuit, the primary circuit for the ignition system is interrupted and current can no longer flow through primary winding **68**. As a result, a high voltage is induced in secondary winding **72** which is applied to one of the spark plugs via conductor **22**, rotor contact **20**, one of the electrodes **16** and then through one of the spark plug wires **14**. The rotor contact **20** and rotor **34** are so synchronized in their rotation that the high voltage is induced in secondary winding **72** at a time that the rotor contact **20** is passing by one of the electrodes **16**.

When a voltage is induced in the pick-up coil **38** of a polarity which drives the emitter of transistor **42** positive, to thereby bias the transistor **42** nonconductive, the operation of the system is the same as when there is no output voltage developed in the coil **38**. This is because when the transistor **42** is only slightly conductive or nonconductive, the voltage of junction **48** is increased and approaches that of conductor **28** to bias transistor **52** conductive. Whenever transistor **52** is conductive, the transistors **58** and **66** are biased conductive as explained hereinbefore.

By using the unijunction transistor **52** and by eliminating resistor-capacitor coupling, the low speed triggering of the ignition system is improved and less voltage from coil **38** is required to trigger the system as compared to systems that use resistor-capacitor coupling.

Although the ignition system as disclosed is to be used with a four cylinder engine, it could be used with engines having a number of cylinders other than four by changing the number of arms on rotor **34** and by changing the number of electrodes for distributor cap **18**. The magnetic pick-up **32**, the distributor cap **18** and the rotor contact **20** can be built into one unit if so desired.

Transistors **42**, **58** and **66** have all been shown as being of the NPN type. These transistors could be PNP transistors if desired.

While the embodiments of the present invention as herein disclosed, constitute a preferred form, it is to be understood that other forms might be adopted.

What is claimed is as follows:

1. An ignition control circuit for an internal combustion engine ignition system comprising, a magnetic pick-up having an output coil, a source of direct current, a transistor having emitter, collector and base electrodes, means connecting the emitter and collector electrodes of said transistor across said source of direct current, means connecting said output coil across the emitter and base electrodes of said transistor, a unijunction transistor having an emitter, a first base and a second base, means connecting said first base and second base of said unijunction transistor across said source of direct current, an output circuit connected with said unijunction transistor for controlling the current flow through the primary winding of an ignition coil, and means connecting the emitter of said unijunction transistor with the collector of said transistor.

2. A control circuit for controlling an internal combustion ignition system comprising, a source of direct current, a magnetic pick-up having a coil winding in which pulses of voltage are induced, an output terminal adapted to control the primary circuit of an ignition system, a transistor having emitter, collector and base electrodes, means connecting the emitter and collector electrodes of said transistor across said source of direct current, means connecting said output coil across the emitter and base electrodes of said transistor, a unijunction transistor having first and second base electrodes and an emitter electrode, means connecting said first and second base electrodes of said unijunction transistor across said source of direct current, means connecting said output terminal with said unijunction transistor, and means connecting the emitter of said unijunction transistor with the collector of said transistor.

3. A control circuit comprising, a source of direct current, a unijunction transistor having first and second base electrodes an an emitter electrode, a second transistor having emitter, collector and base electrodes, a first circuit connected across said source of direct current including said first and second base electrodes of said unijunction transistor, an output terminal for said control circuit connected with one of the base electrodes of said unijunction transistor, a second circuit connected across said source of direct current including a resistor and the emitter and collector electrodes of said second transistor, means connecting the junction of said resistor and one of said emitter and collector electrodes of said transistor with the emitter of said unijunction transistor, means connecting the base electrode of said transistor with said source of direct current in such a manner that said transistor is normally biased at least partially "on" by said source of direct current, and a source of pulsating voltage connected across the emitter and base electrodes of said transistor for periodically driving the transistor fully conductive between its emitter and collector electrodes.

4. A control circuit for controlling an internal combustion engine ignition system comprising, a source of direct current, a unijunction transistor having first and second base electrodes and an emitter electrode, a transistor having emitter, collector and base electrodes, a magnetic pick-up having an output coil in which pulses of voltage are induced, first, second and third parallel circuits connected across said source of direct current, said first circuit including a resistor and said output coil, said second circuit including the emitter and collector electrodes of said transistor, said third circuit including said first and second base electrodes of said unijunction transistor, means connecting the base electrode of said transistor between one side of said resistor and said coil winding, and means connecting one of said emitter and collector electrodes of said transistor with the emitter of said unijunction transistor.

5. An ignition system for an internal combustion engine comprising, an ignition coil having a primary winding and a secondary winding, a source of direct current, a first transistor having emitter, collector and base electrodes, means connecting the emitter and collector electrodes of said first transistor and said primary winding in series across said source of direct current, a second transistor having emitter, collector and base electrodes, means connecting the emitter and the collector electrodes of said second transistor across said source of direct current, means connecting the emitter electrode of said second

transistor with base electrode of said first transistor, a unijunction transistor having first and second bases and an emitter, means connecting said first and second bases of said unijunction transistor across said source of direct current, means connecting one of the bases of said unijunction transistor with the base of said second transistor, a third transistor having emitter, collector and base electrodes, means connecting the emitter and collector electrodes of said third transistor across said source of direct current, means connecting the emitter of said unijunction transistor with the collector of said third transistor, and timing means operated in synchronism with said engine for controlling the conduction of said third transistor.

6. The ignition system according to claim 5 wherein the timing means is a magnetic pick-up having an output coil connected across the emitter and base electrodes of said third transistor.

7. An ignition system for an internal combustion engine comprising, a source of direct current, an ignition coil having a primary winding and a secondary winding, a unijunction transistor having an input circuit and an output circuit, means connected with the output circuit of said unijunction transistor for controlling current flow through said primary winding of said ignition coil, a magnetic pick-up having an output coil, and means connecting said output coil with the input circuit of said unijunction transistor, said unijunction transistor beng connected across said source of direct current, said source of direct current feeding the primary winding of said ignition coil.

8. An ignition system for an internal combustion engine comprising, a source of direct current, an ignition coil having a primary winding and a secondary winding, a control circuit connected to said primary winding and with said source of direct current for controlling current flow through said primary winding, a timing circuit driven in synchronism with said engine, a unijunction transistor having first and second bases connected across said source of direct current and having an emitter, means connecting the emitter and one of the bases of said unijunction transistor with said timing circuit, and means connecting said one base of said unijunction transistor with said control circuit.

9. An ignition system for an internal combustion engine comprising, a source of direct current, an ignition coil having a primary winding and a secondary winding, a control transistor, means connecting said control transistor and said primary winding in series across said source of direct current, said control transistor switching on and off to control primary winding current, a voltage pulse generator having an output coil, and a circuit coupling said output coil and the emitter and base electrodes of said control transistor for applying control signals to said control transistor, said circuit including at least one unijunction transistor.

No references cited.

ARTHUR GAUSS, *Primary Examiner.*

J. BUSCH, *Assistant Examiner.*