US 20020052268A1

(19) United States

(12) Patent Application Publication

(10) Pub. No.: US 2002/0052268 A1

(43) Pub. Date: May 2, 2002

Morcillo-Quintero et al.

(54) EXERCISE MACHINE PROVIDING FOR NATURAL MOVEMENT

(76) Inventors: **Vicente Morcillo-Quintero**, Silla (ES); **Victor Pertegaz-Esteban**, Valencia (ES); **Urs Mosimann**, Wallenried (CH); **Ulrich Schweizer**, Silvaplana (CH)

Correspondence Address:
DORSEY & WHITNEY, LLP
SUITE 4700
370 SEVENTEENTH STREET
DENVER, CO 80202-5647 (US)

(21) Appl. No.: **09/862,001**

(22) Filed: **May 2, 2001**

Related U.S. Application Data

(63) Non-provisional of provisional application No. 60/201,621, filed on May 3, 2000.

Publication Classification

(51) **Int. Cl.**[7] **A63B 21/00**

(52) **U.S. Cl.** **482/92**

(57) **ABSTRACT**

The present invention is directed to an exercise machine that simulates the natural body movements such as pulling, pushing, pushing up and pulling down. The exercise machine has a weight stack, a closed loop belt/pulley system for actuating the weight stack and a base frame. The exercise machine also has two arm assemblies that are rotatably connected to the base frame at an angle extending away from the base frame providing for a natural converging or diverging motion depending on the orientation of the arm assemblies. A rotatable handle is also attached to the arm assemblies. The weight stack is operably connected to the arm assemblies by the belt/pulley system which is operably connected to a pulley arm which is operably connected to the arm assemblies through a rigid force transfer link that provides for movement in three-dimensions.

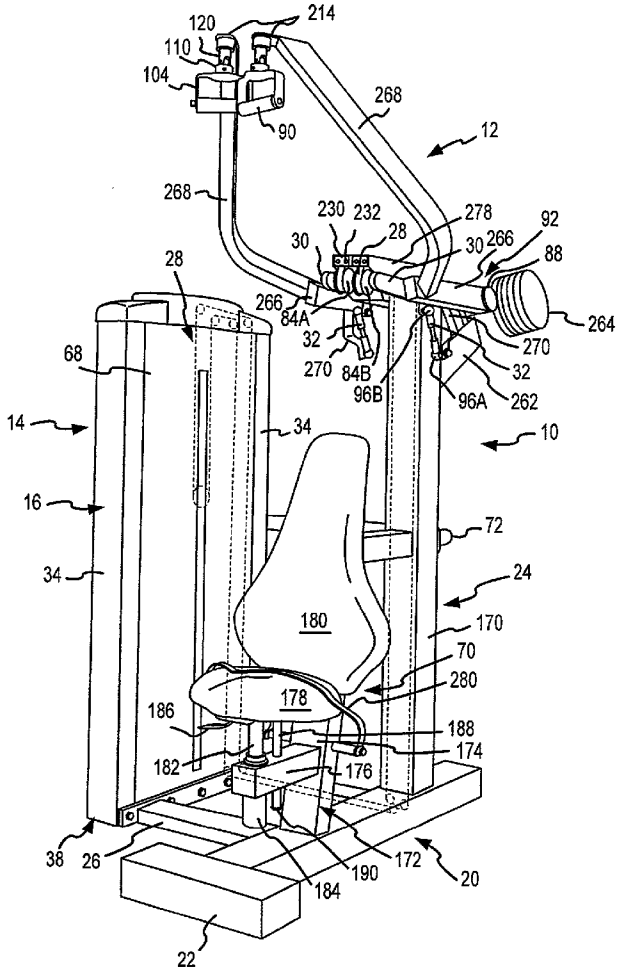

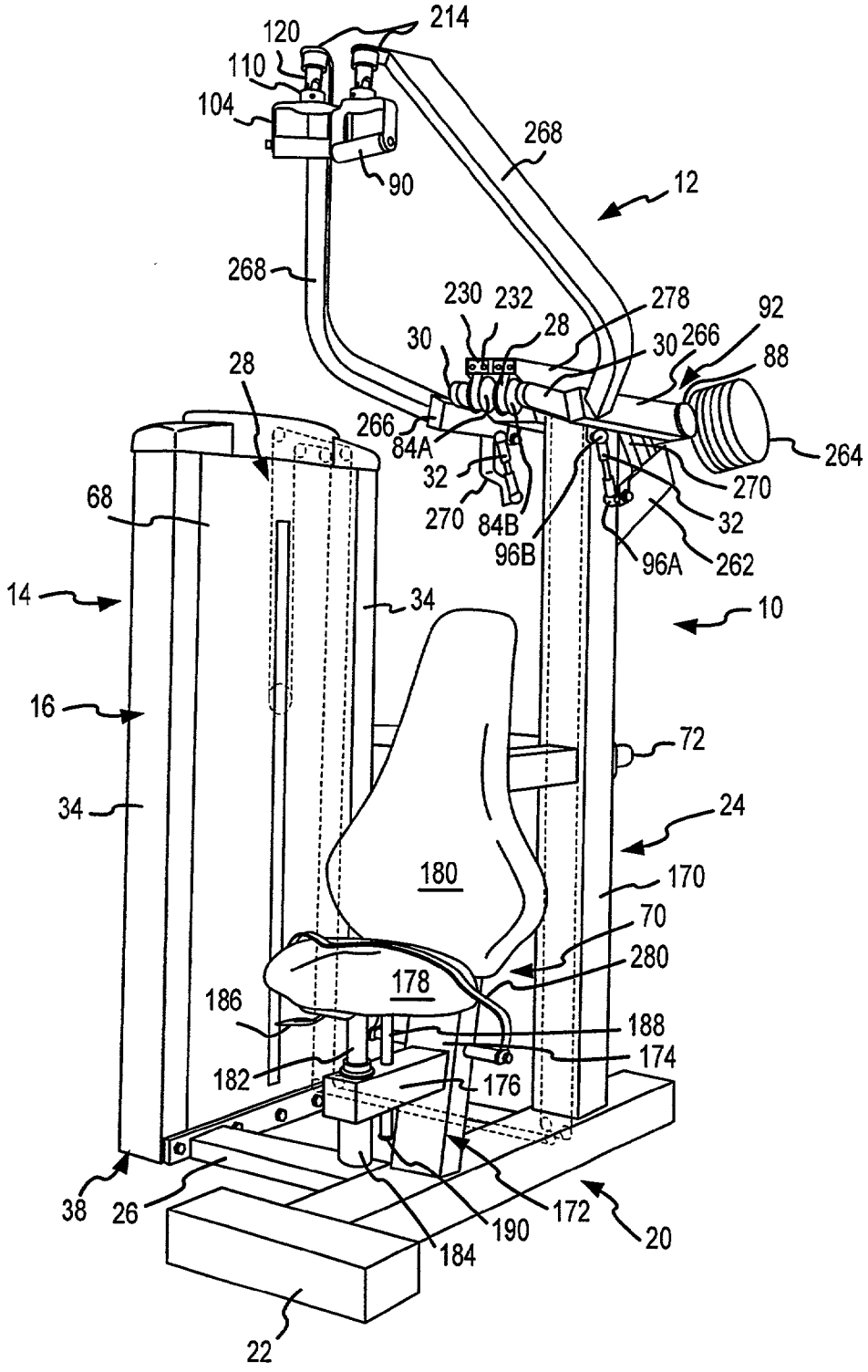
120
214
110
104
268
90
12
268
230
232
278
92
30
28
30
266
88
28
266
84A
264
32
270
68
270
84B
32
96B
96A
262
14
34
10
16
72
34
24
180
170
70
280
178
186
188
174
182
176
38
26
172
190
20
184
22

FIG.1

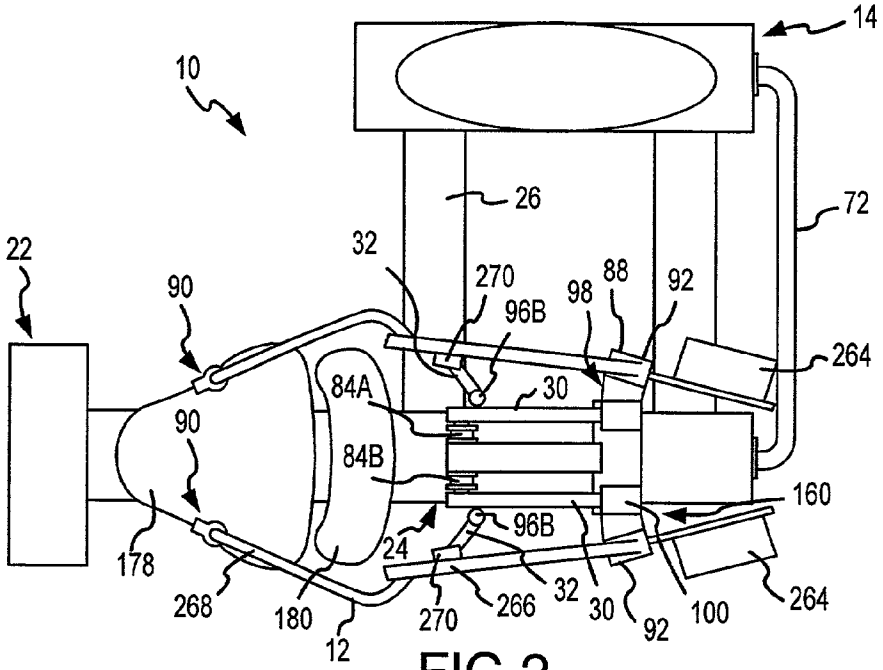
14
10
26
72
22
32
270
98
88
92
90
96B
264
84A
30
90
84B
160
96B
24
178
32
30
100
264
268
180
270
266
92
12

FIG.2

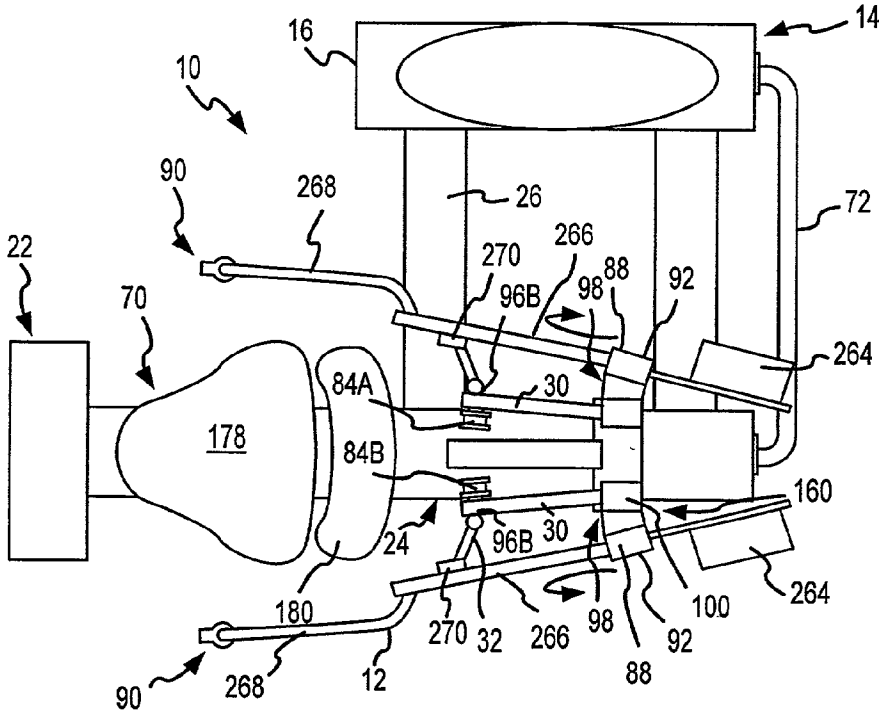
16
14
10
90
268
26
72
266
22
270
88
92
70
96B
98
264
84A
30
178
84B
160
24
96B
30
180
270
32
266
98
100
264
92
88
90
268
12

FIG.3

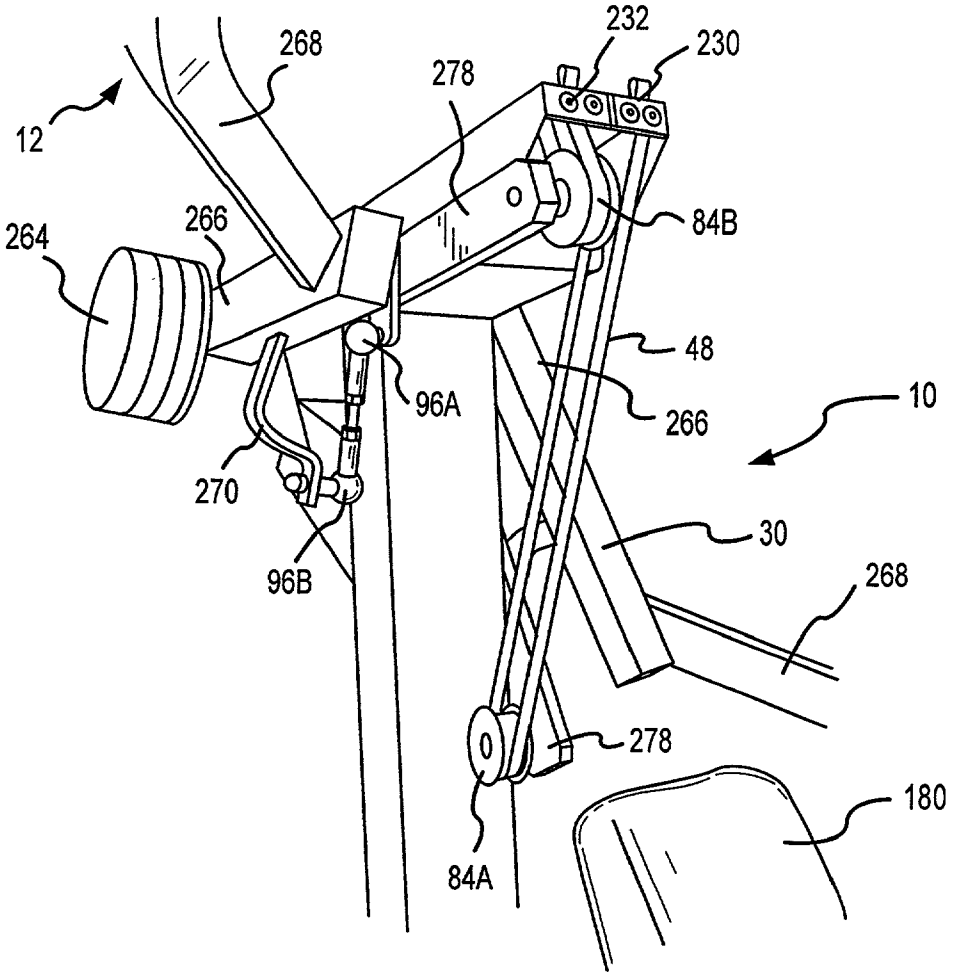
232
230
268
278
12
84B
264
266
48
96A
266
10
270
30
96B
268
278
180
84A

FIG.4

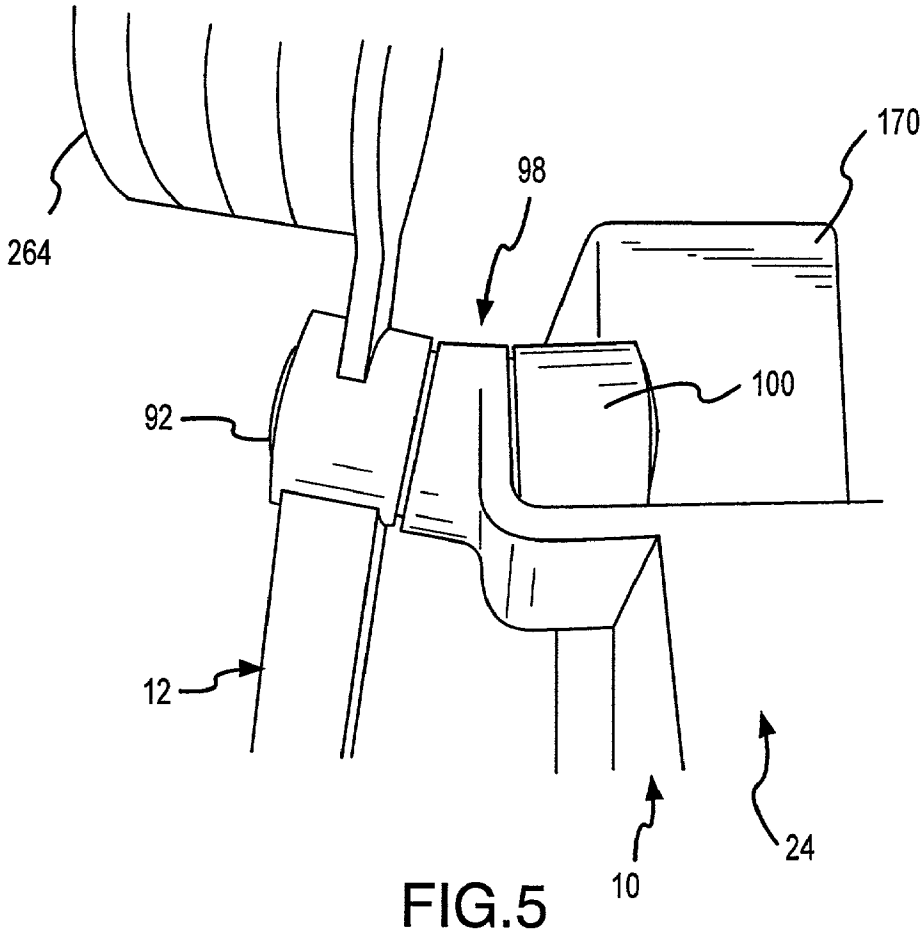

FIG.5

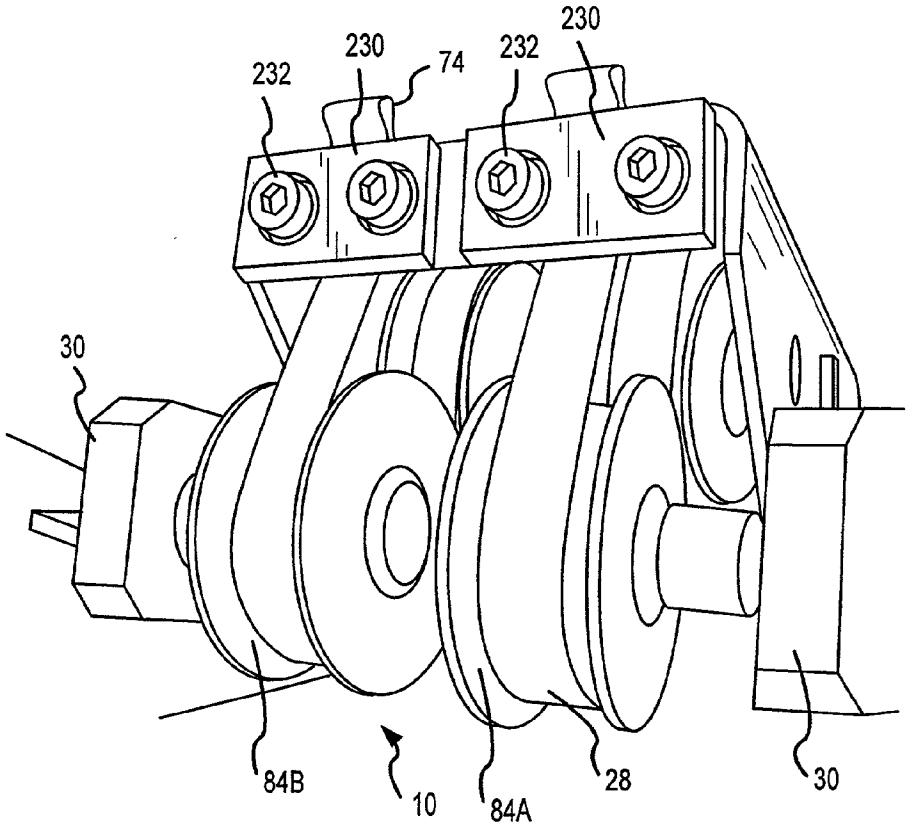

FIG.6

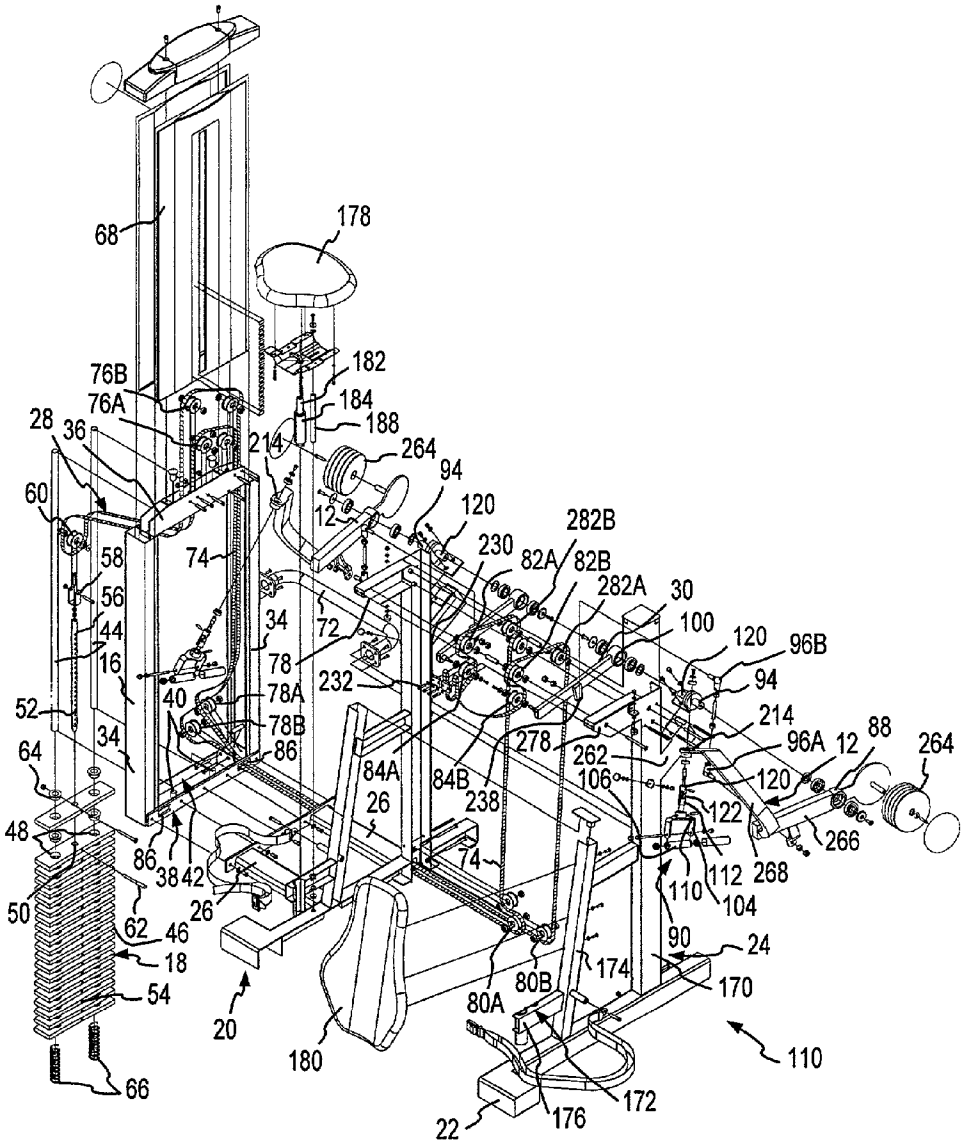
68
178
182
184
188
76B
76A
28
36
214
264
94
60
12
120
282B
230
82A
82B
282A
30
58
74
56
44
34
72
100
120
96B
16
78
94
232
40
78A
52
78B
214
34
86
278
96A
12
88
264
64
84A
262
84B
106
120
26
238
122
48
86
38
42
74
266
112
268
110
104
50
62
46
26
90
24
18
174
170
54
80B
80A
20
180
110
66
172
22
176

FIG.7

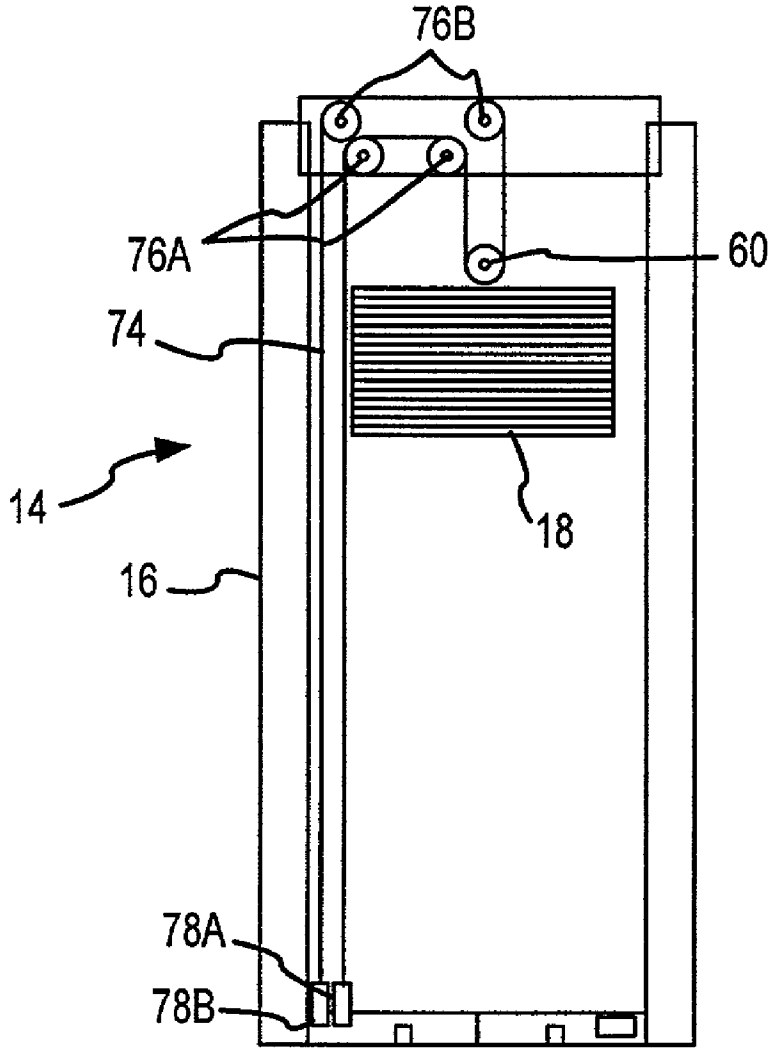

FIG.8

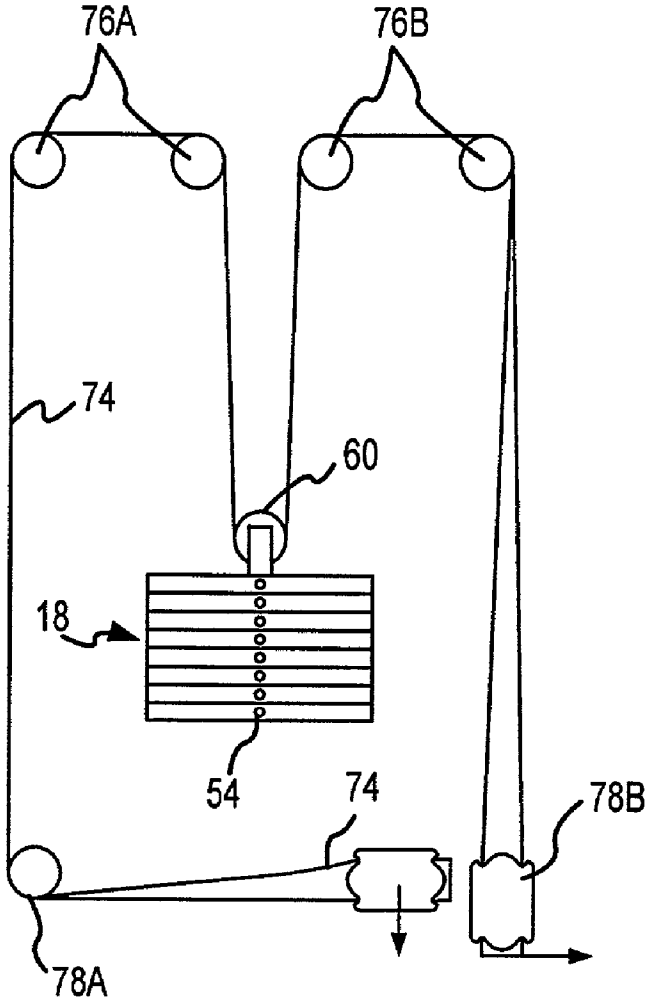

FIG.9

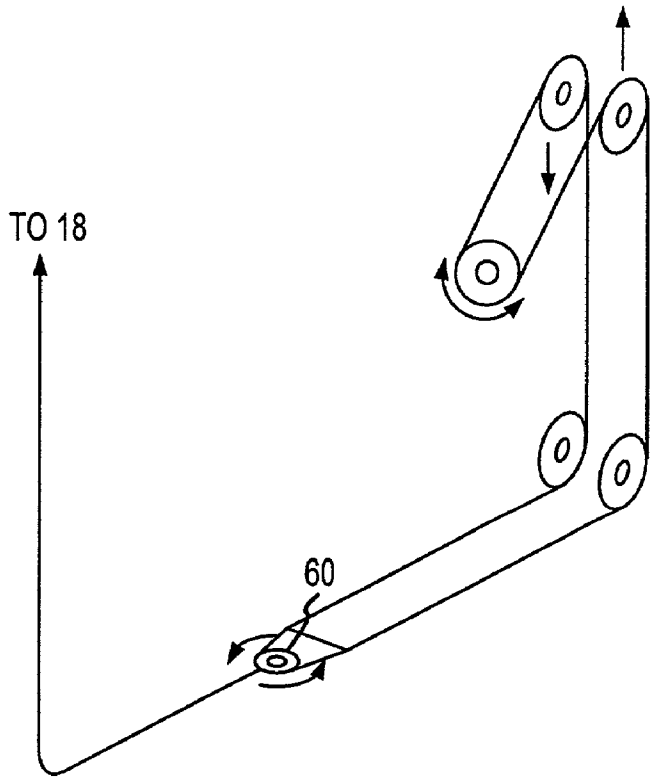

FIG.10

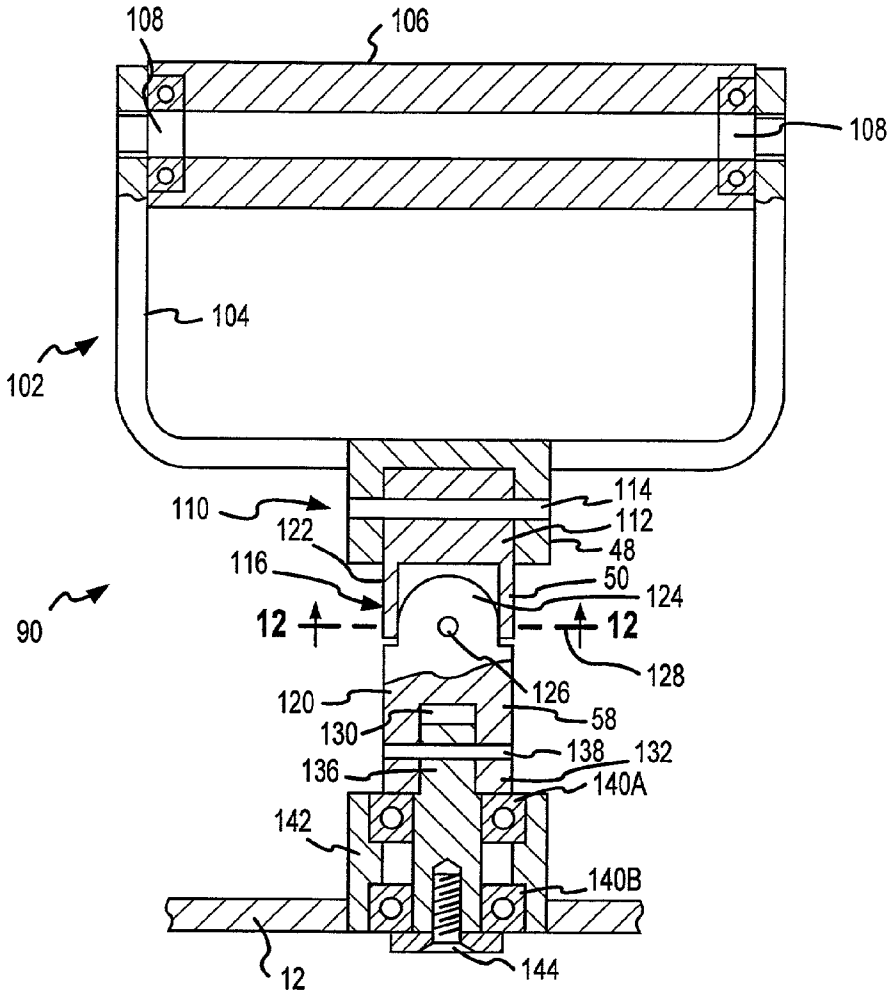

FIG.11

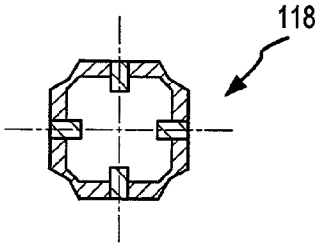

FIG.12

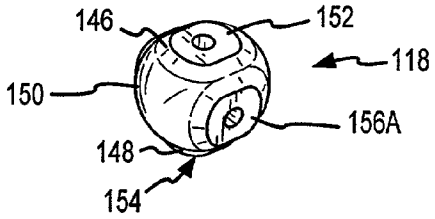

FIG.13

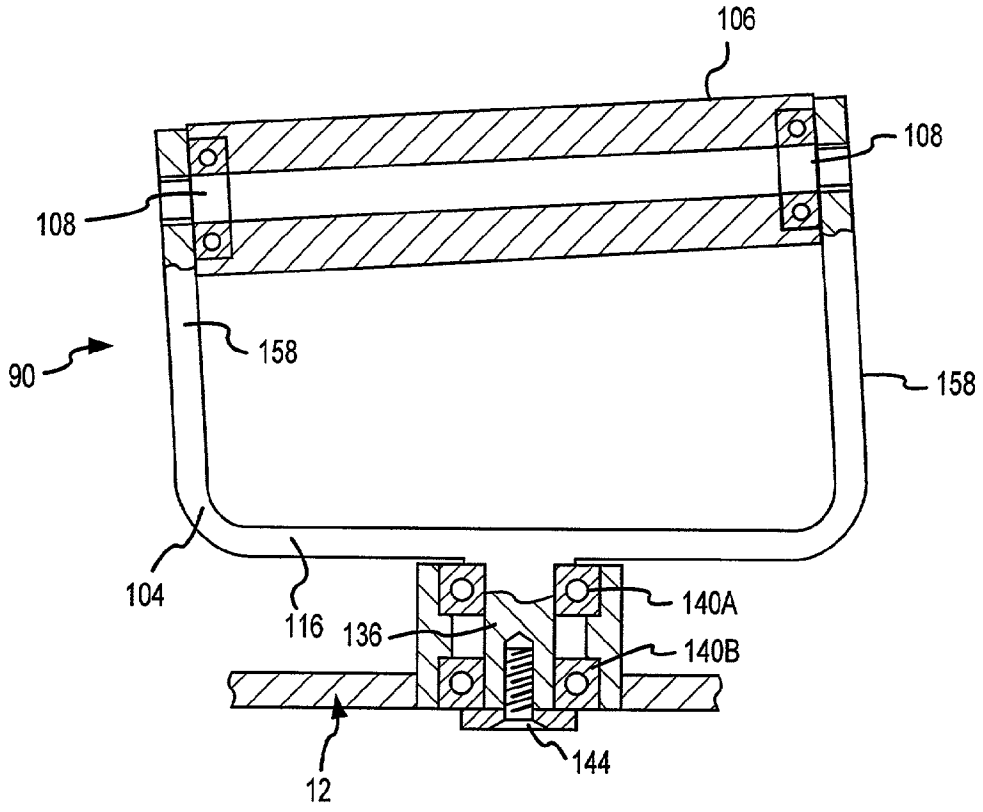

FIG.14

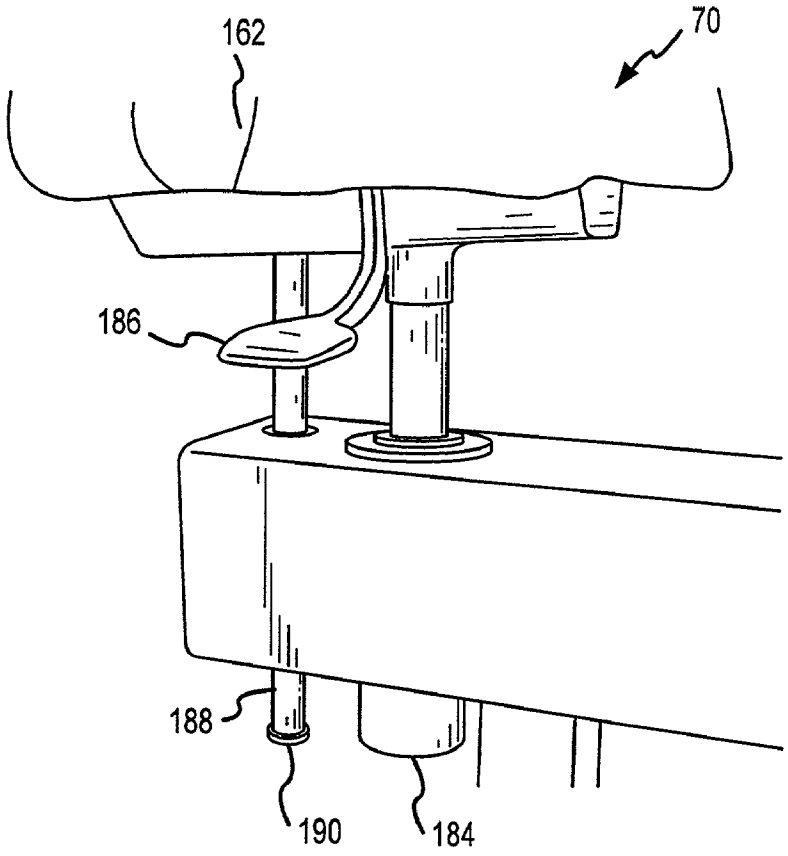

FIG.15

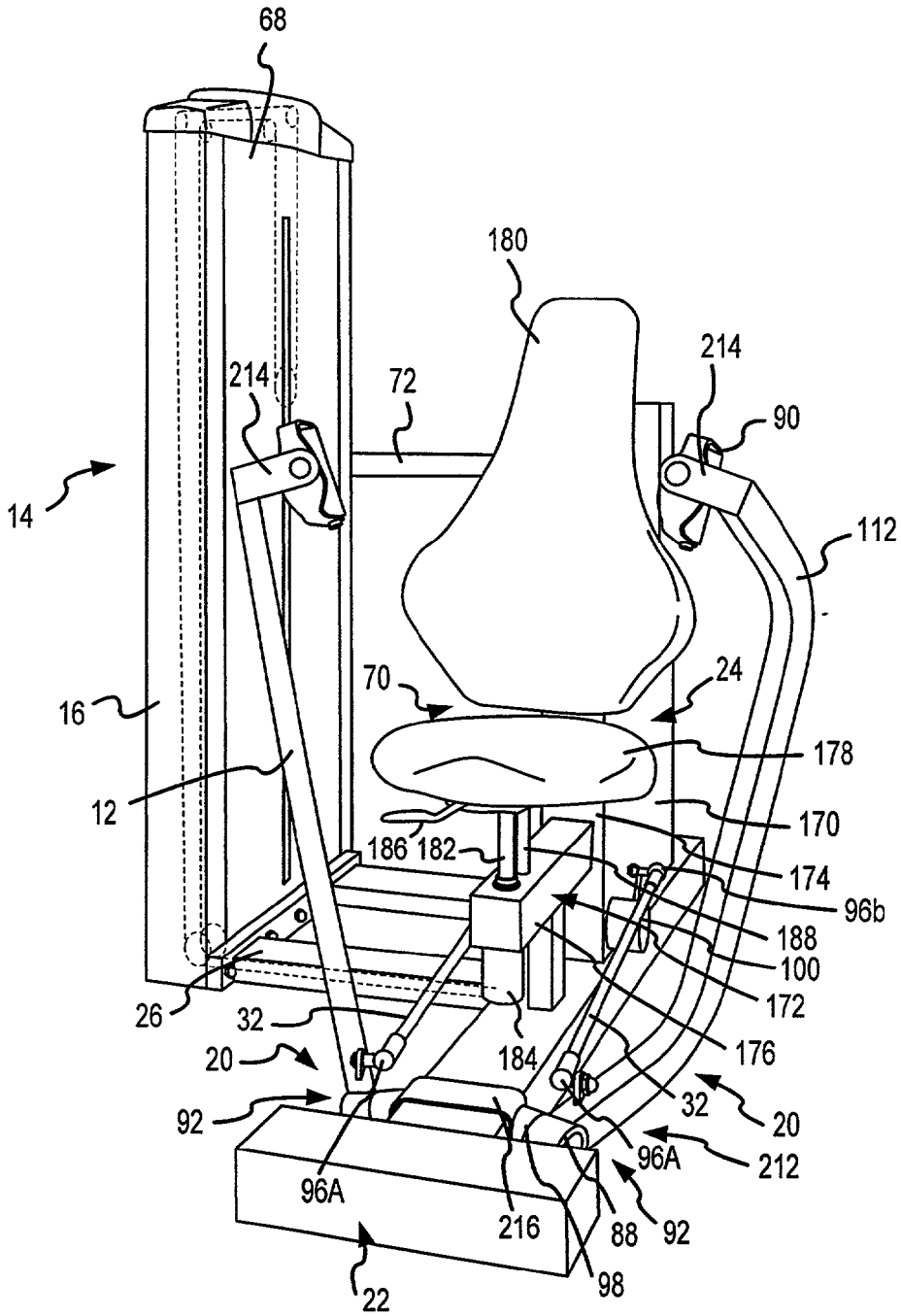
68
180
214
72
214
90
14
112
70
24
16
178
12
170
186
182
174
96b
188
100
26
172
32
176
20
184
32
20
92
212
96A
96A
216
88
92
98
22

FIG.16

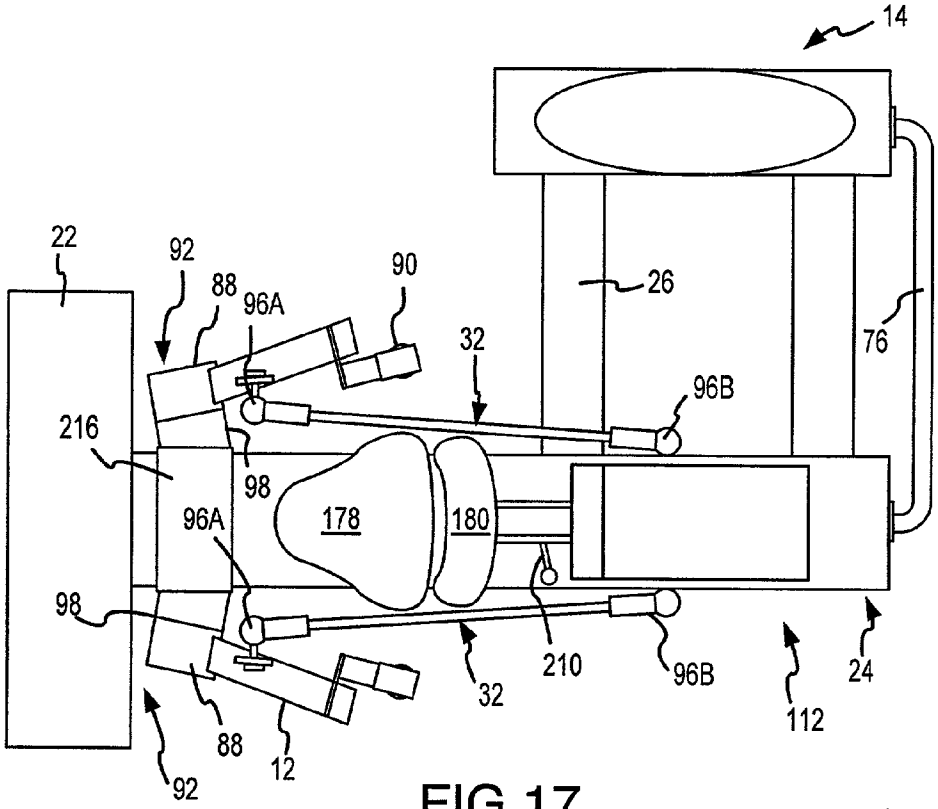
14
22
92
88
96A
90
26
76
32
96B
216
98
178
180
96A
98
210
96B
24
32
112
88
12
92

FIG.17

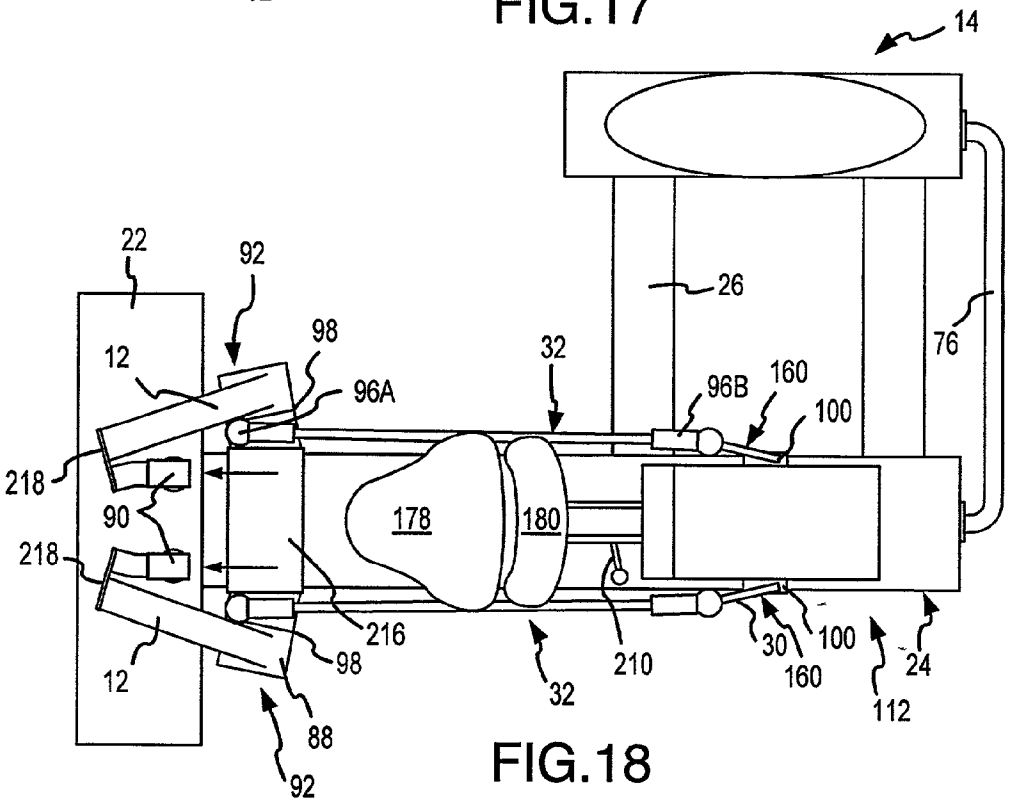
14
22
92
26
76
98
12
32
96B
160
96A
100
218
90
178
180
218
216
98
210
30
100
160
24
12
32
112
88
92

FIG.18

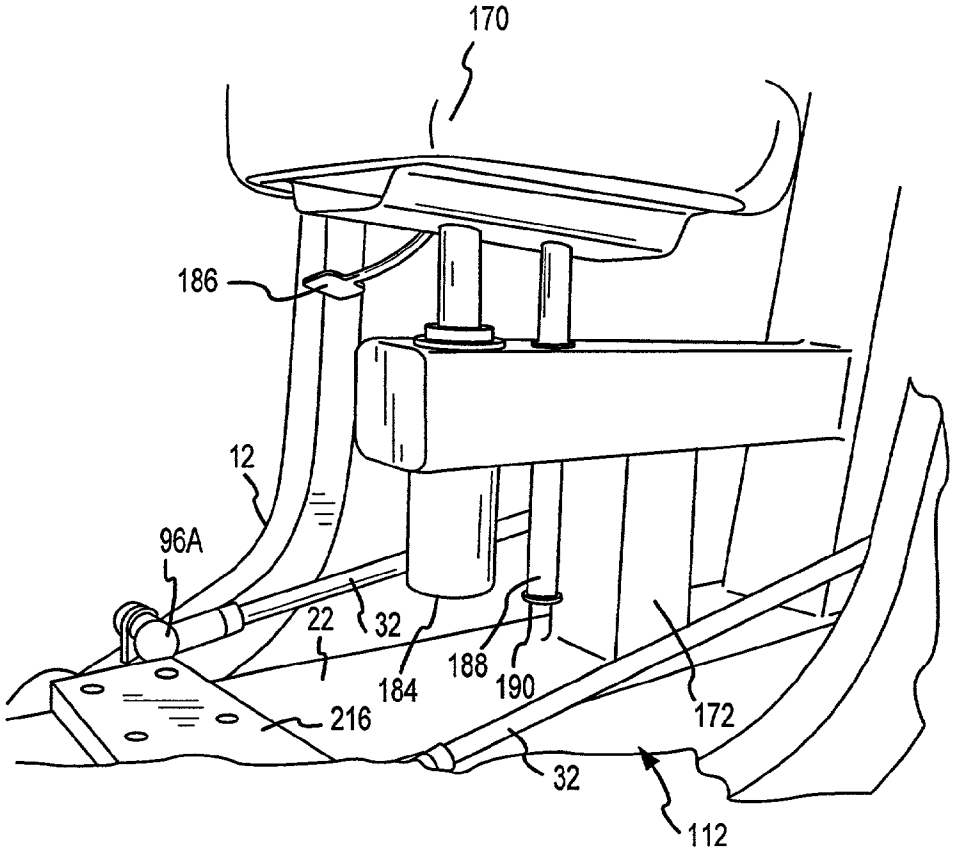

FIG.19

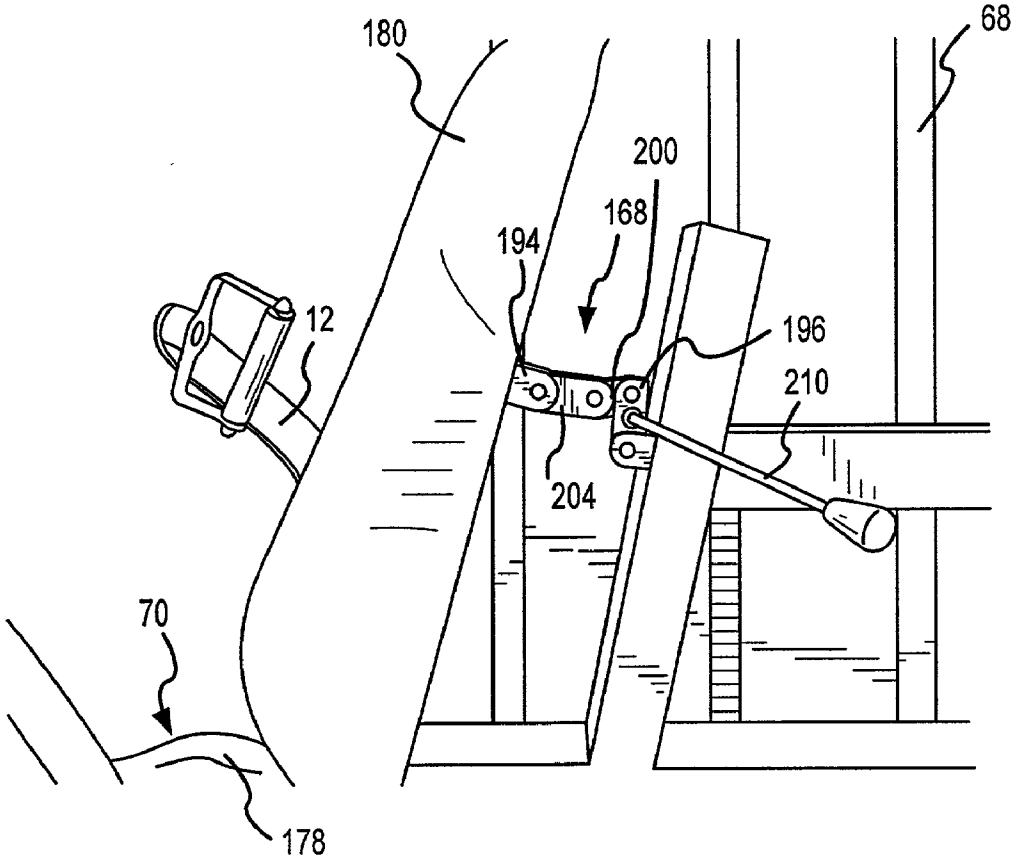

FIG.20

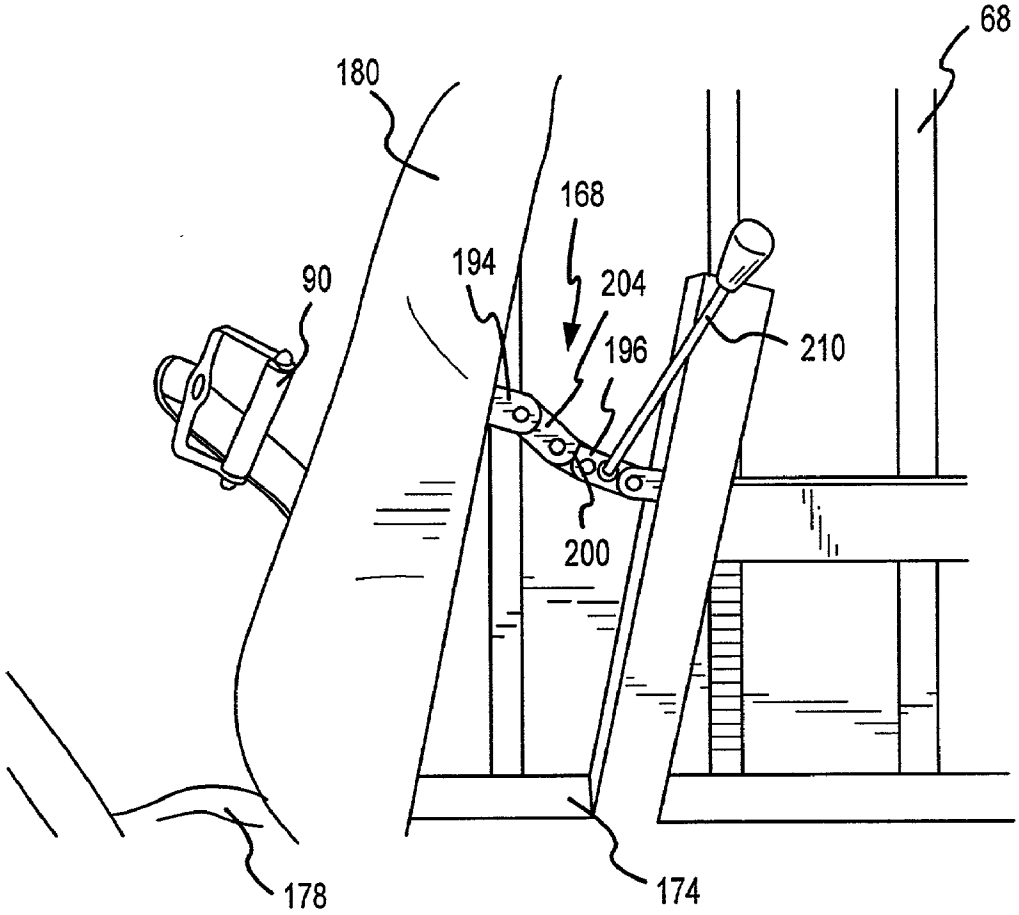

FIG.21

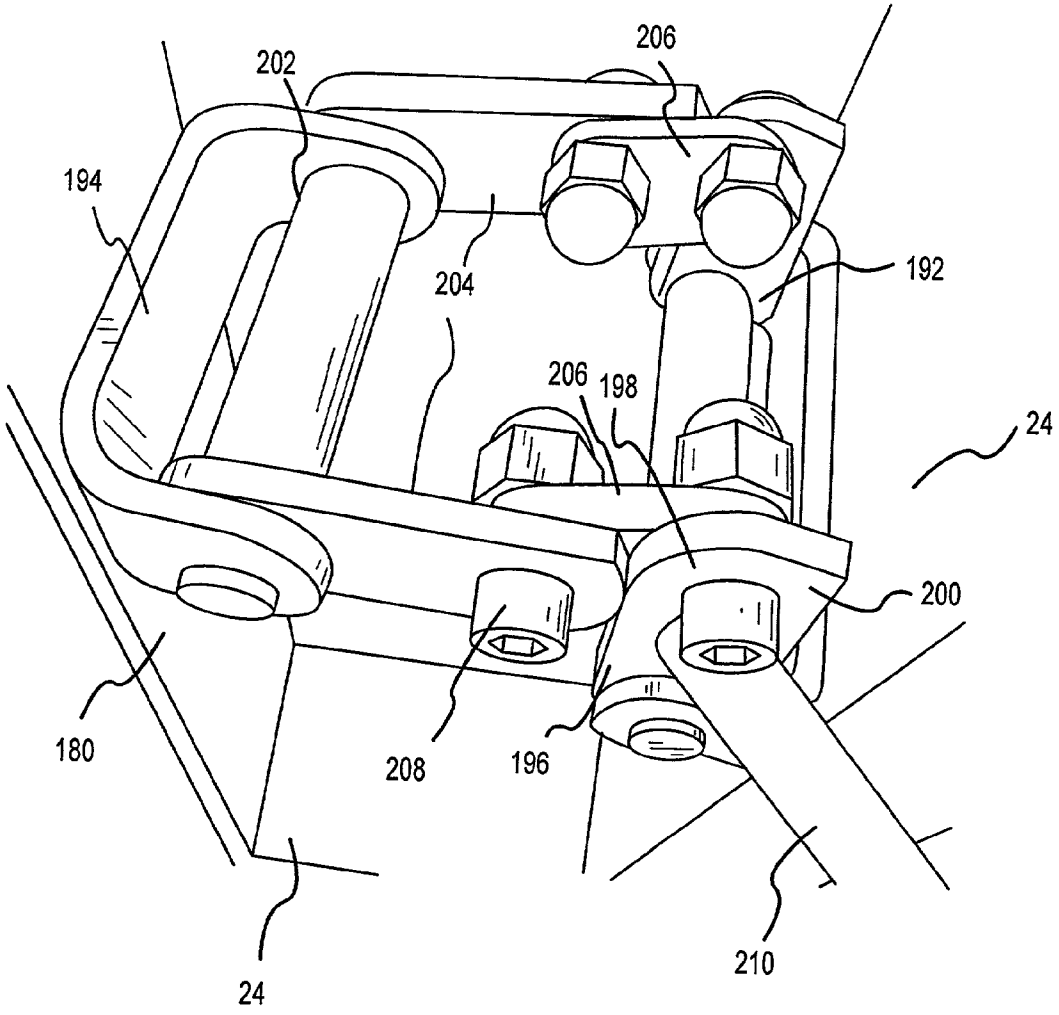

FIG.22

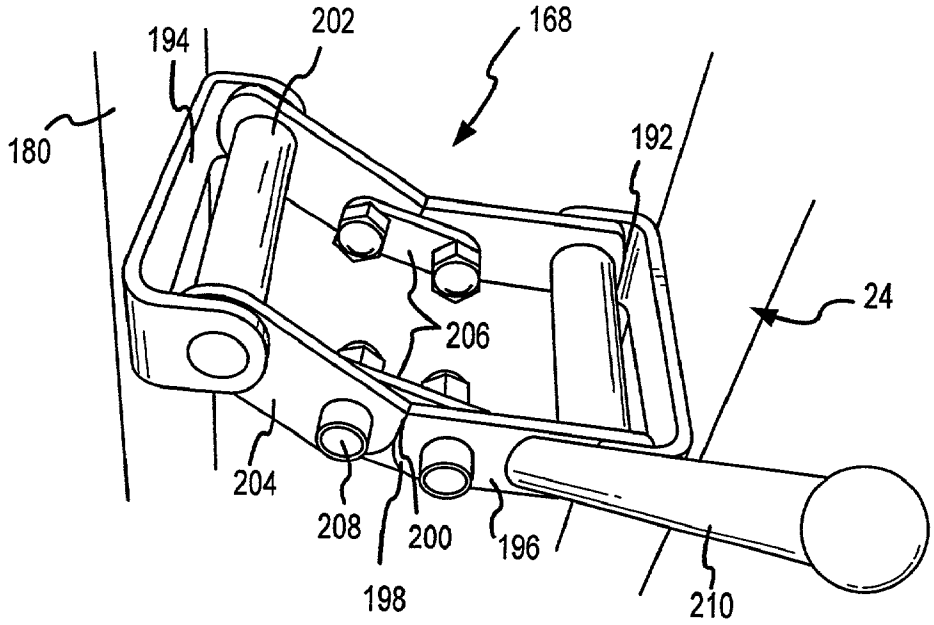

FIG.23

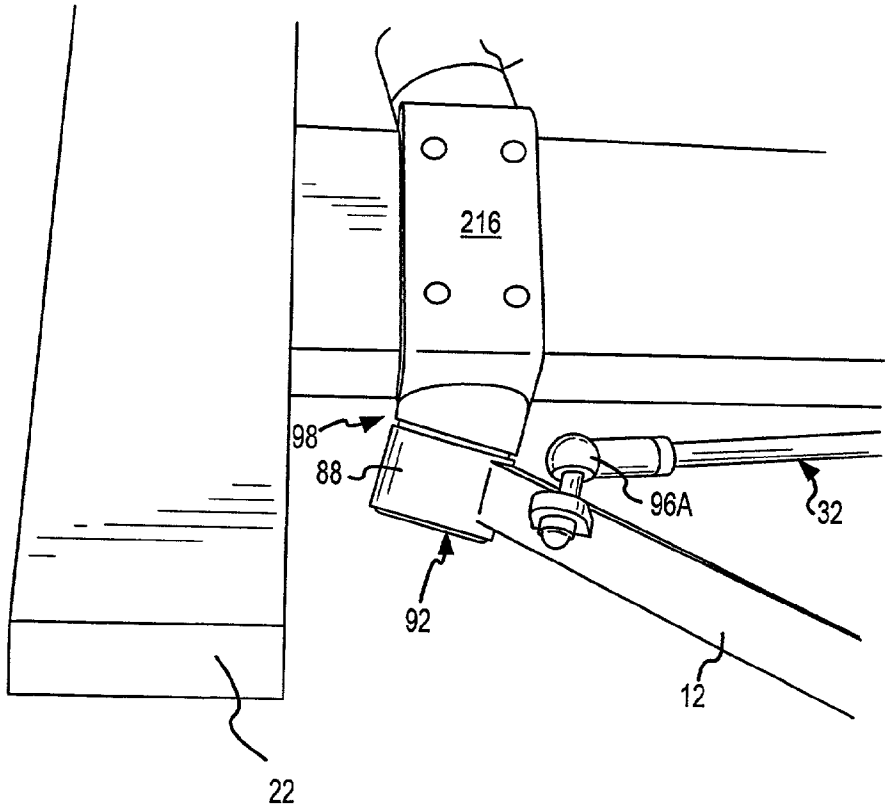

FIG.24

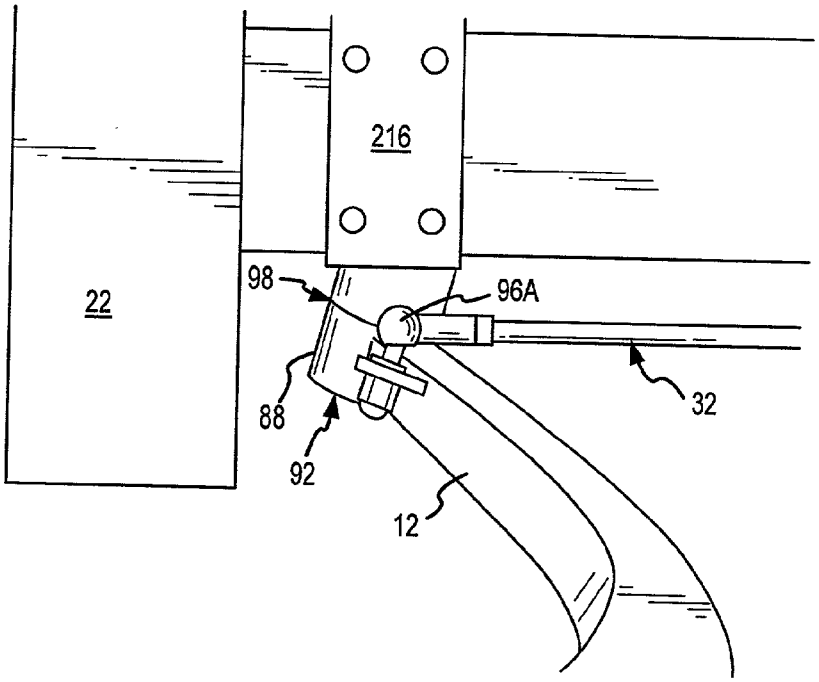

FIG.25

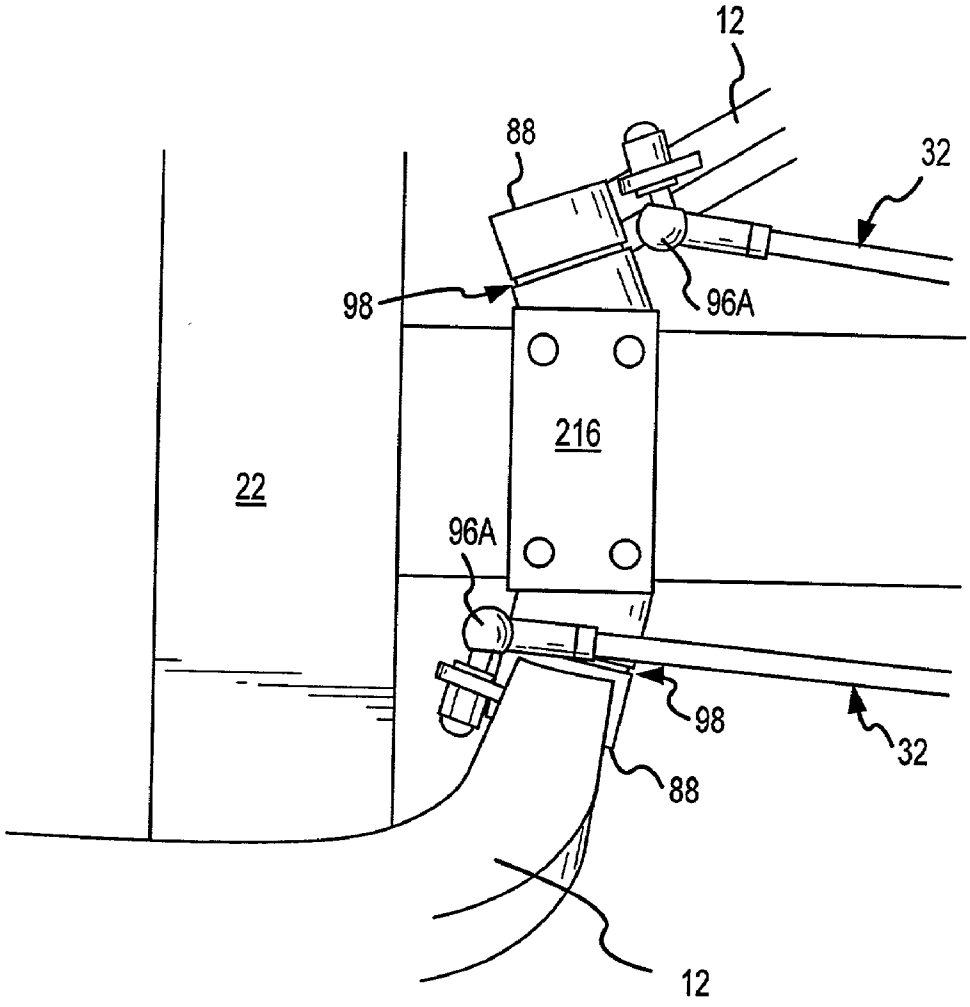

FIG.26

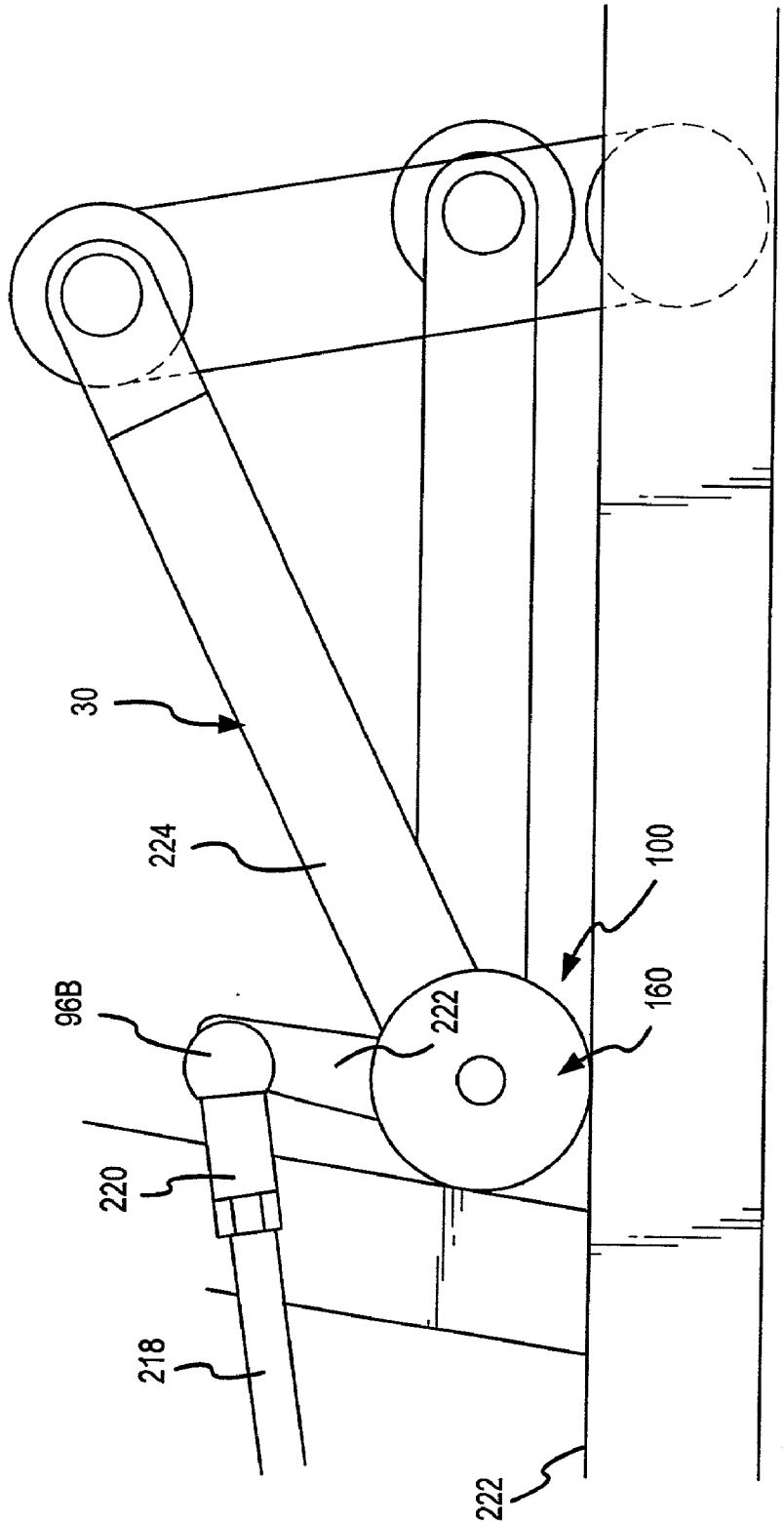

FIG.27

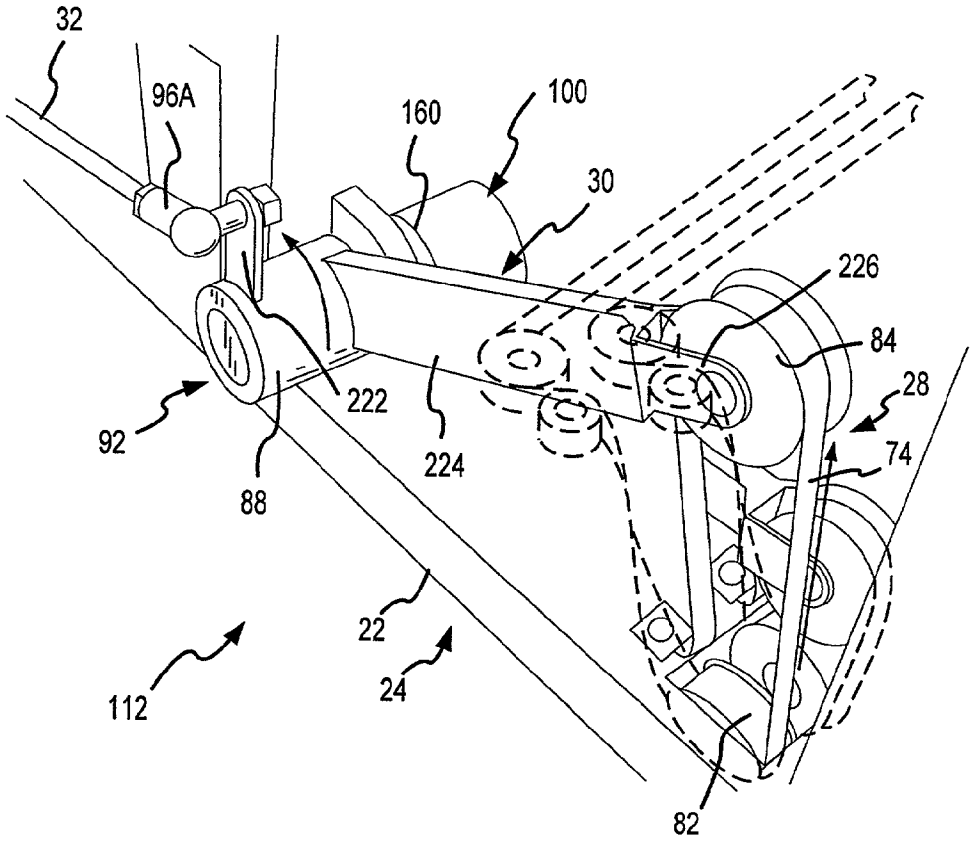

FIG.28

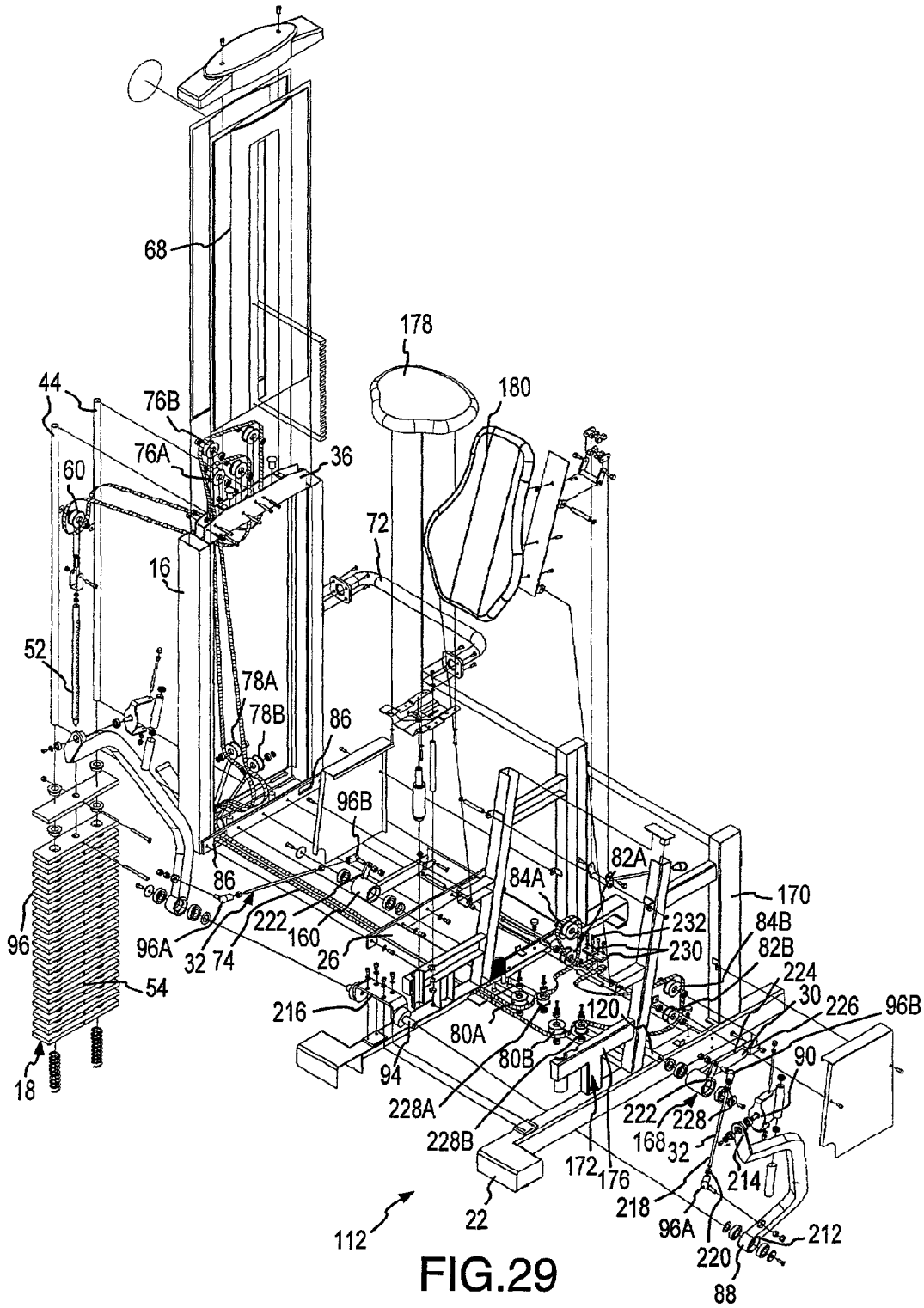
68
178
180
44
76B
76A
36
60
72
16
52
78A
78B
86
96B
82A
84A
170
86
222
160
232
84B
96
96A
32
74
26
230
82B
224
54
30
226
96B
216
120
80A
90
18
94
80B
228A
222
228
228B
168
32
172
176
214
218
22
96A
212
112
220
88

FIG.29

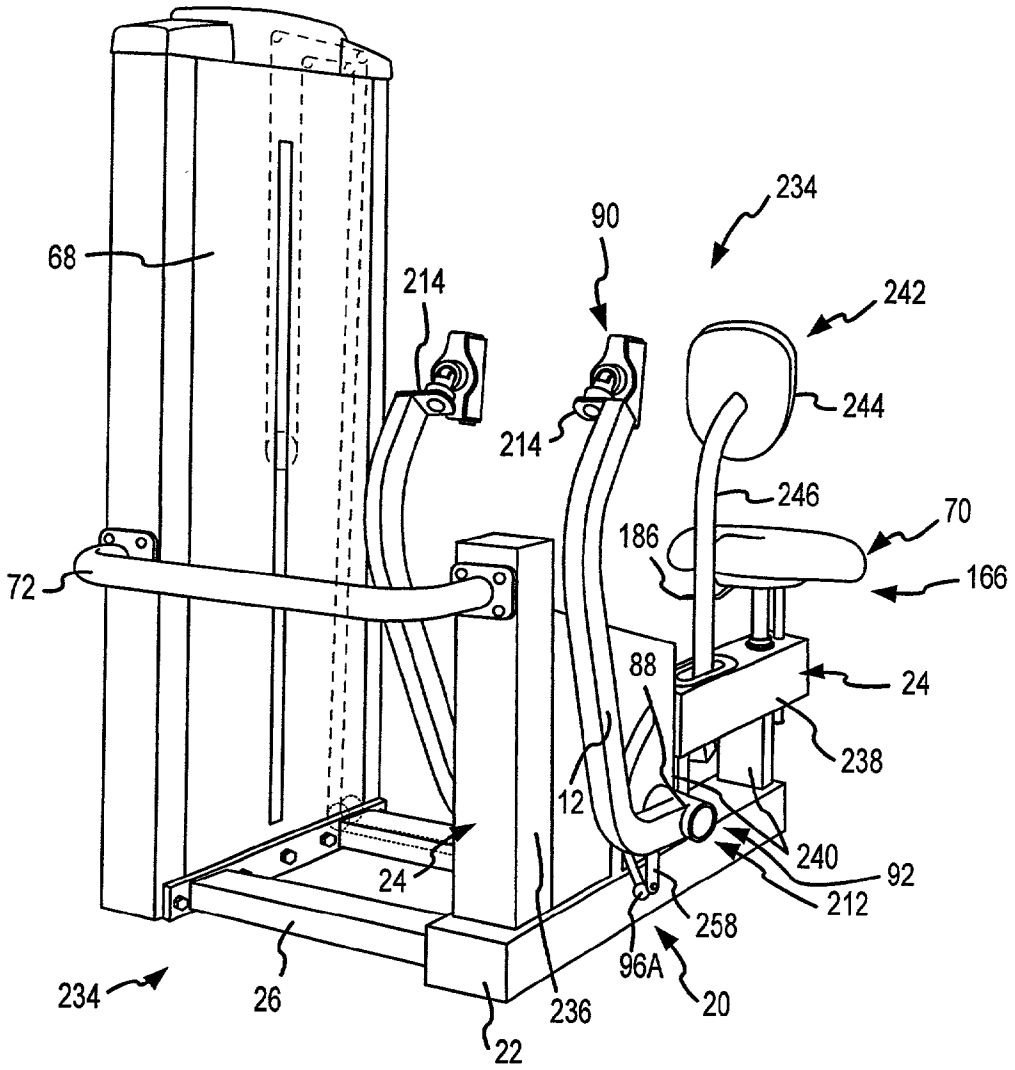
68
214
90
234
242
244
214
246
70
186
166
72
88
24
238
12
240
92
24
212
258
96A
20
234
26
236
22

FIG.30

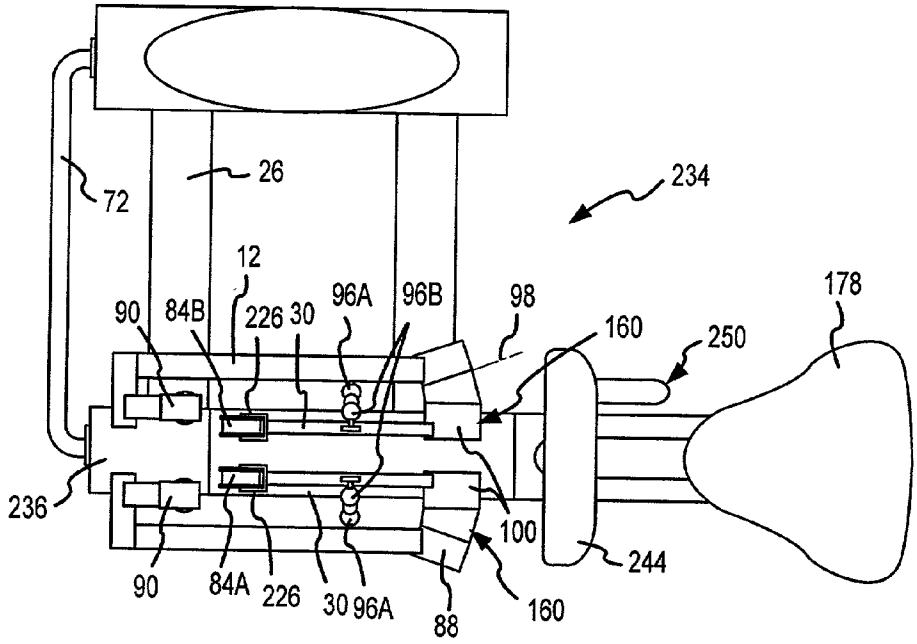
72
26
234
12
90
84B
226
30
96A
96B
98
160
250
178
236
100
244
90
84A
226
30
96A
88
160

FIG.31

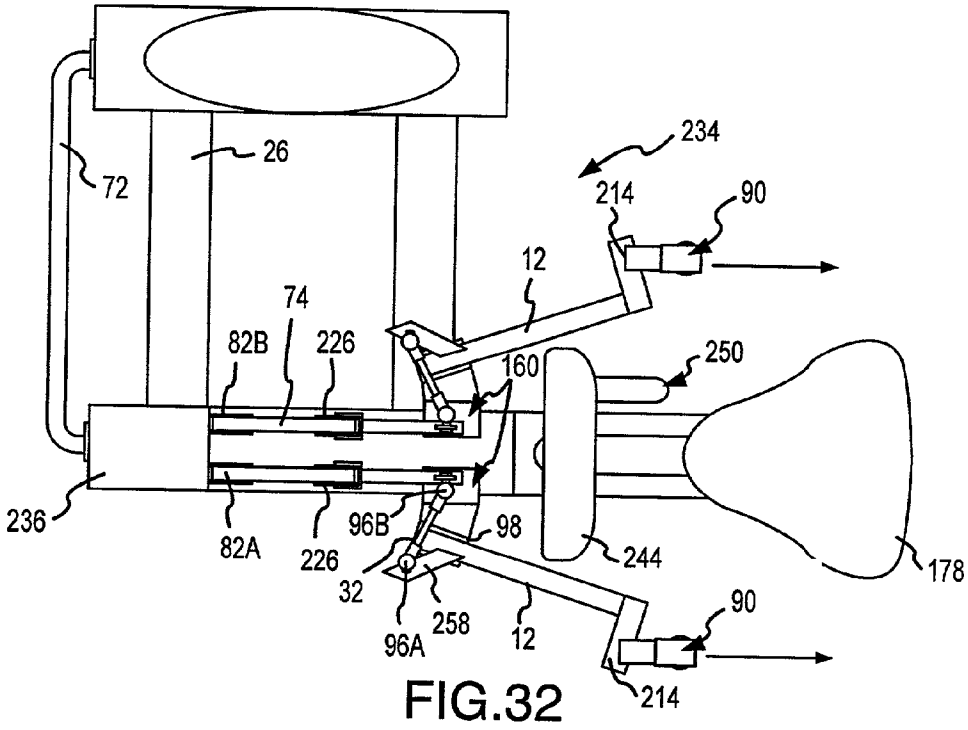
72
26
234
214
90
12
74
82B
226
160
250
236
82A
226
96B
98
244
178
32
96A
258
12
90
214

FIG.32

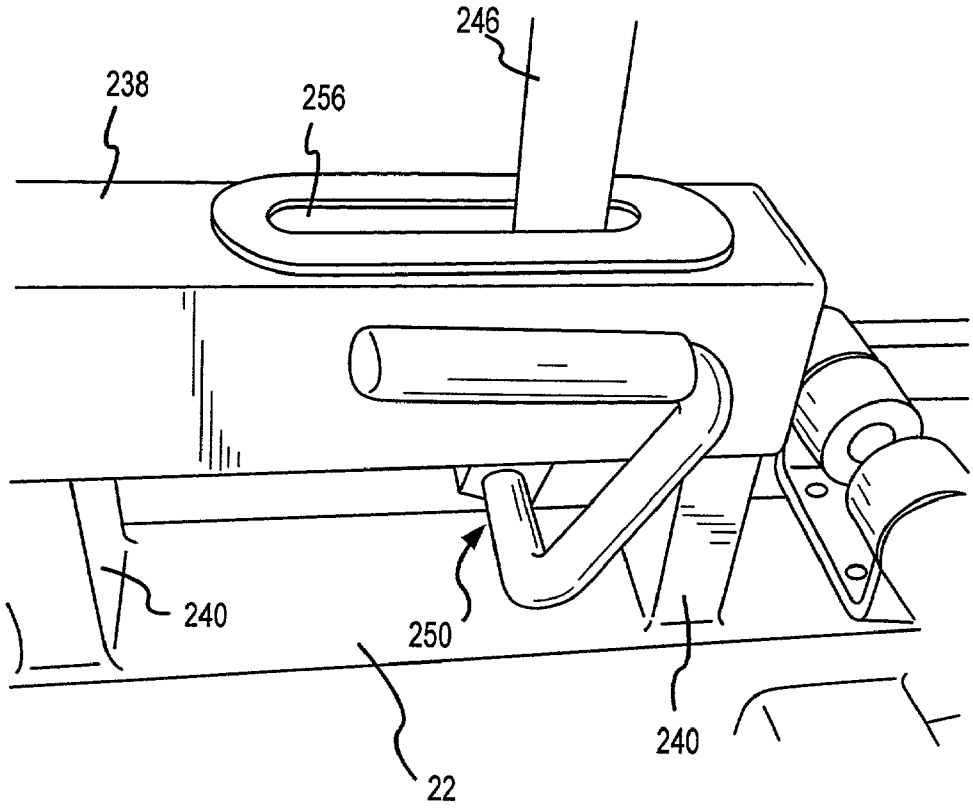

FIG.33

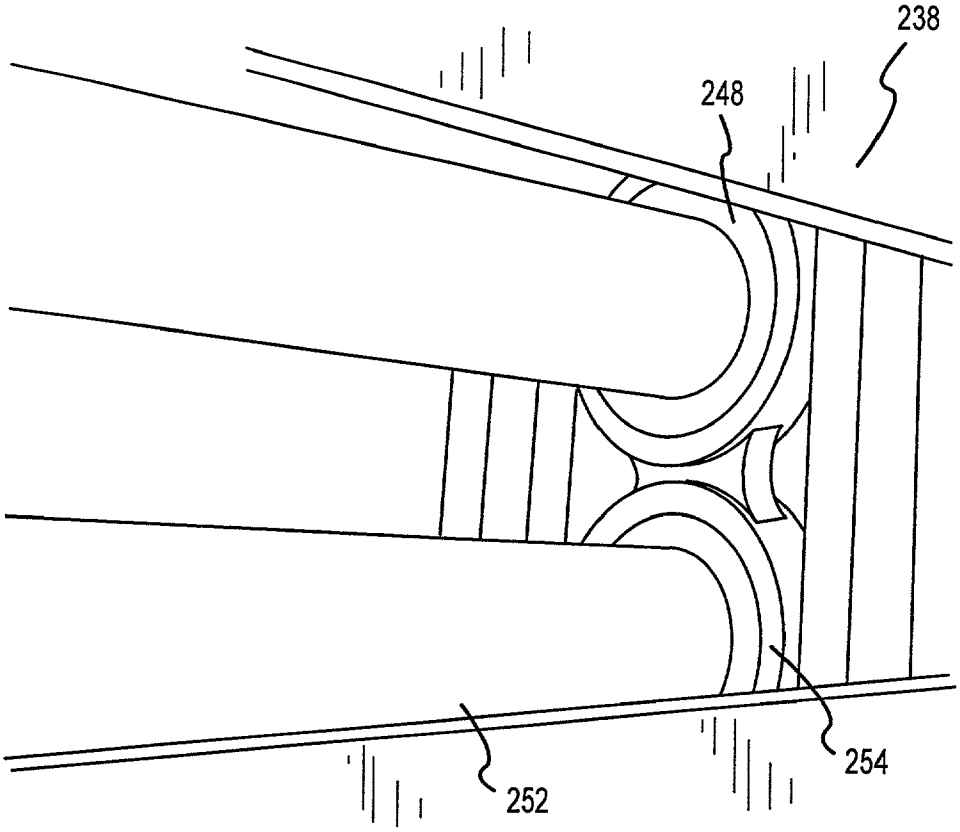

FIG.34

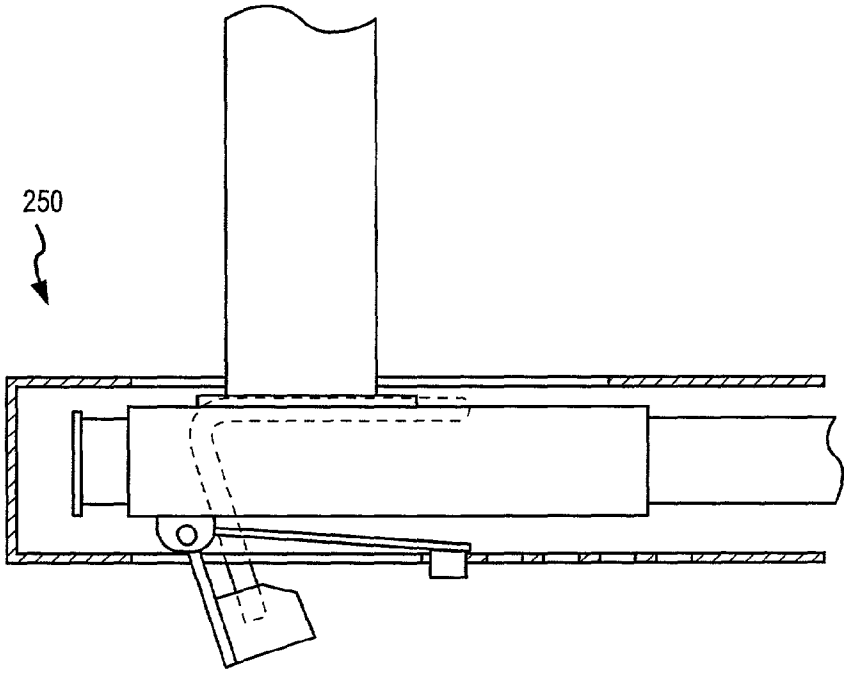

FIG.35

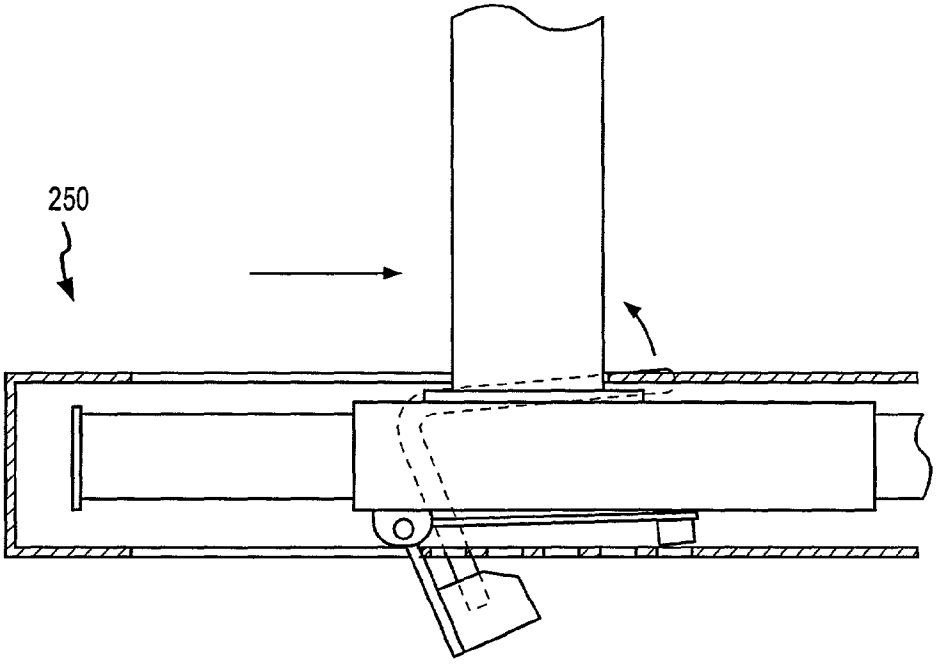

FIG.36

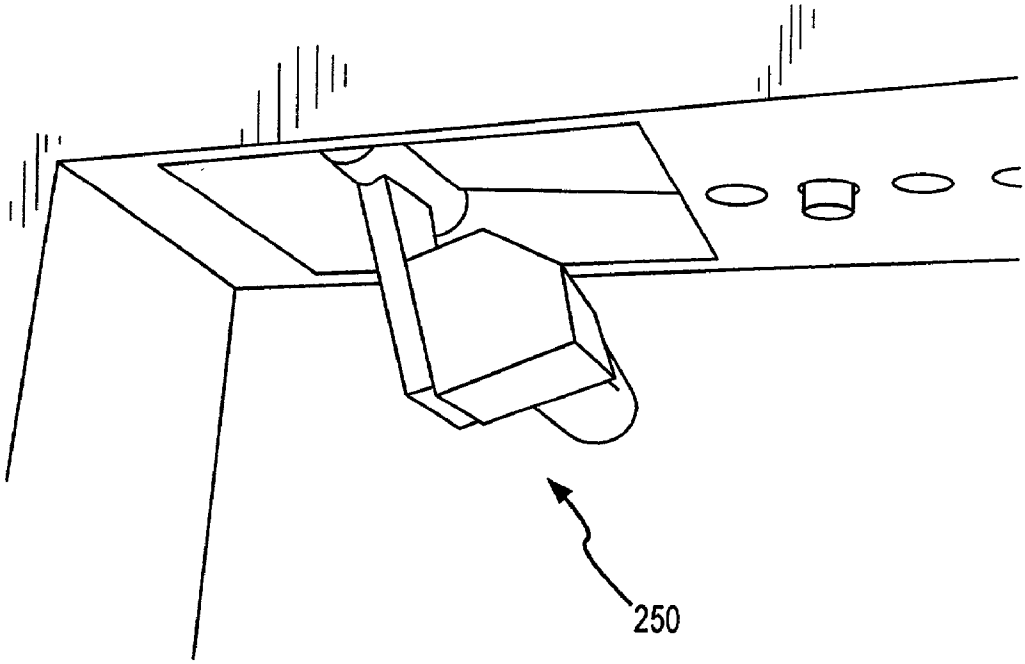

FIG.37

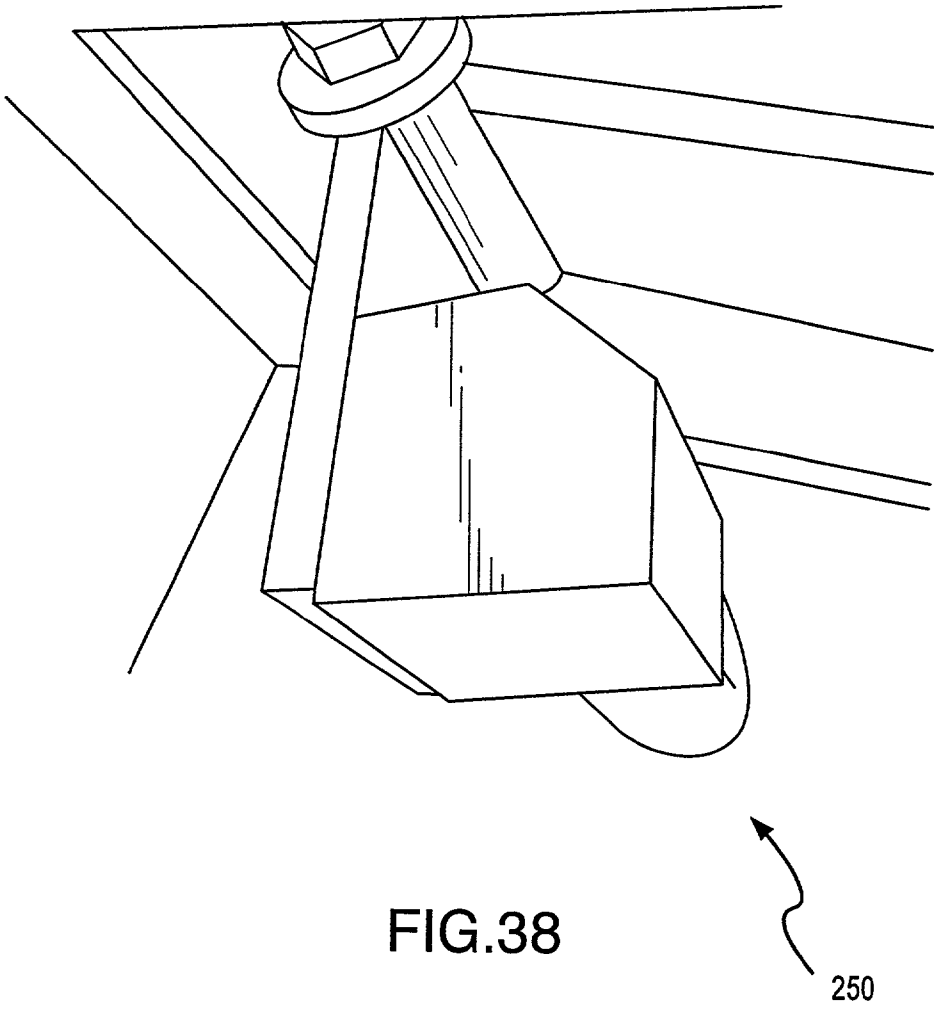

FIG.38

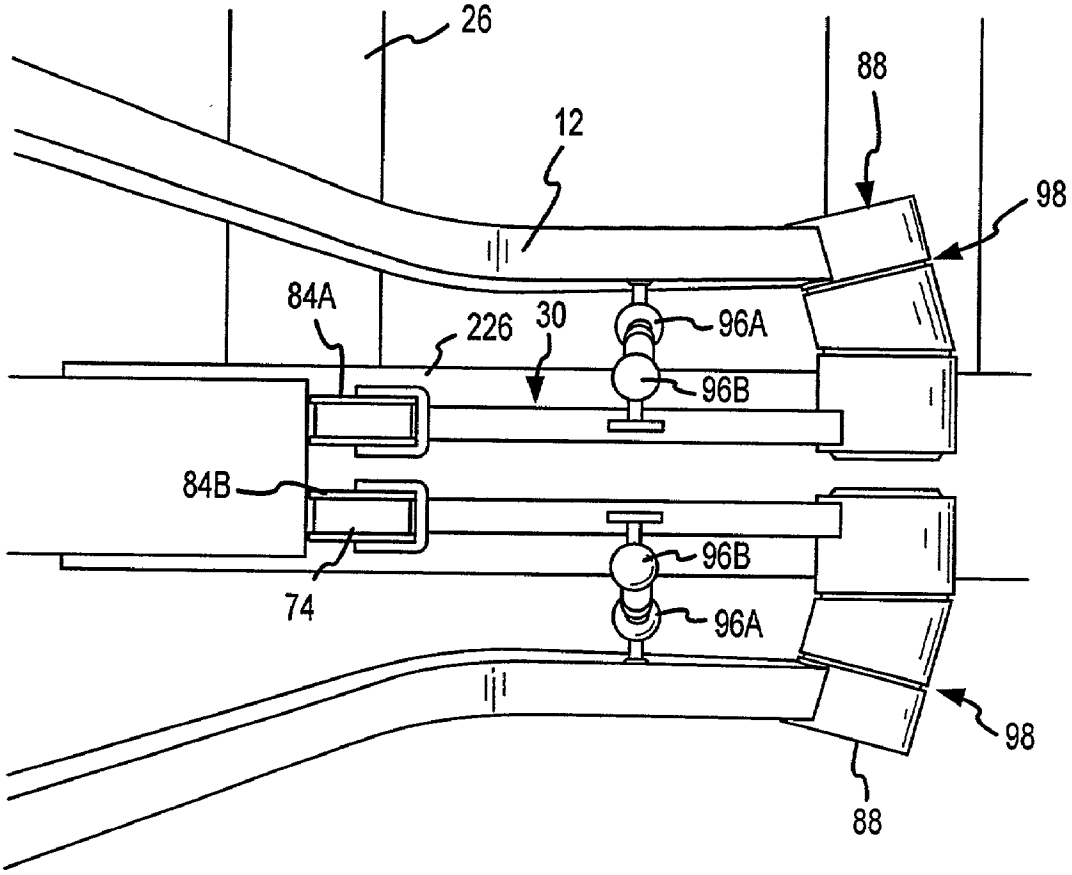

FIG.39

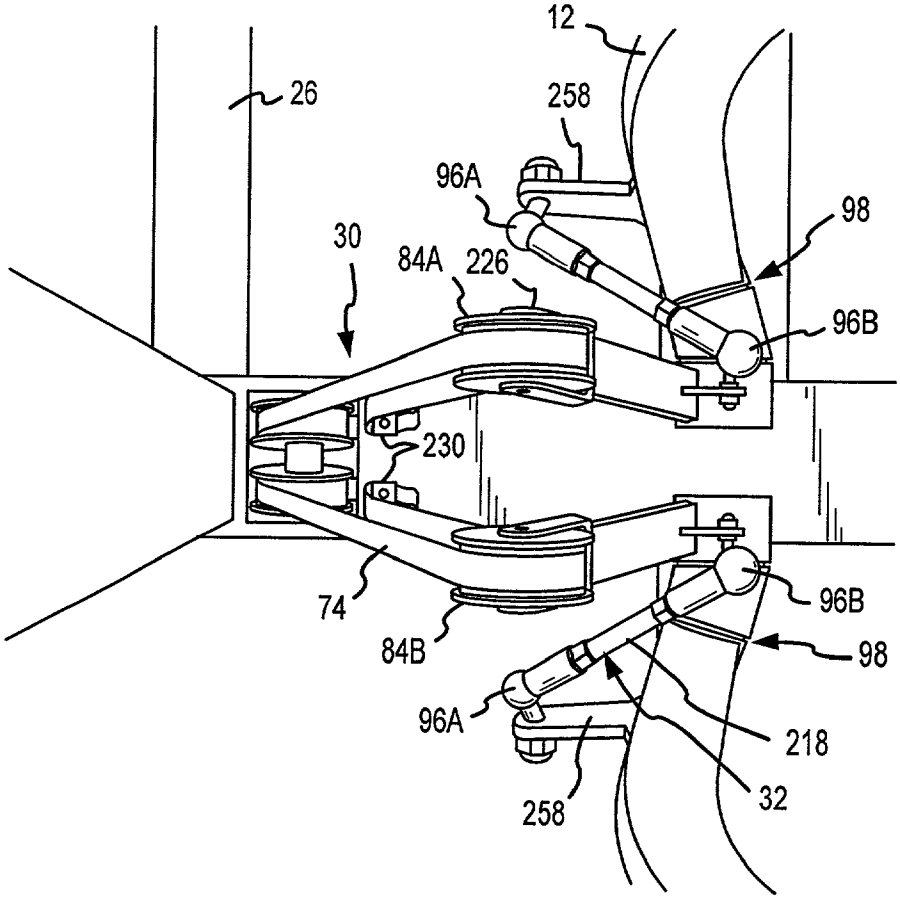

FIG.40

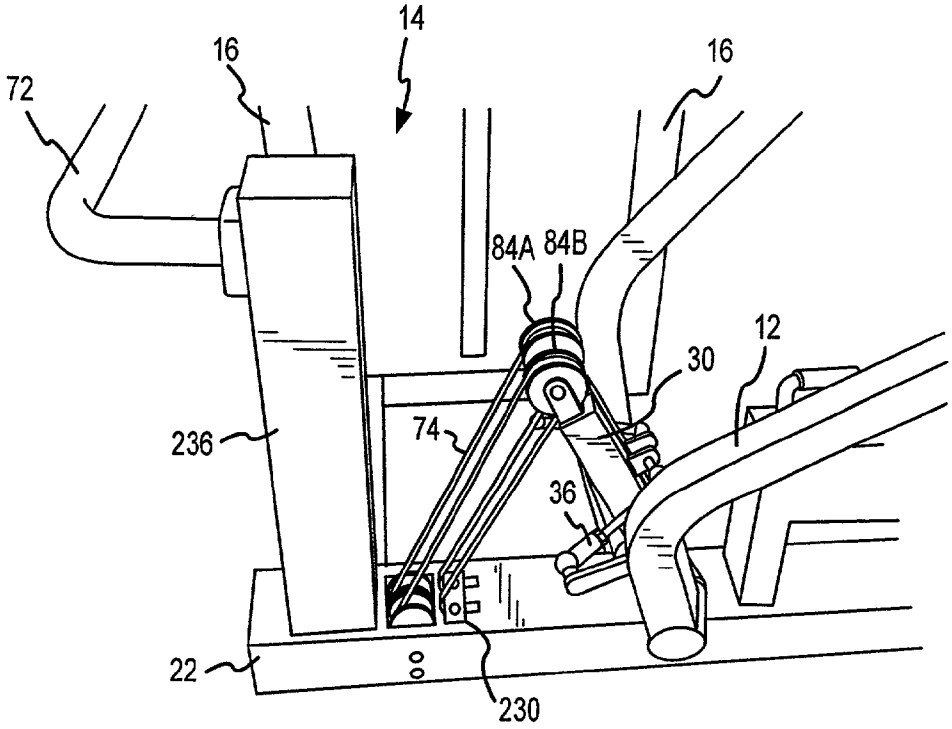

FIG.41

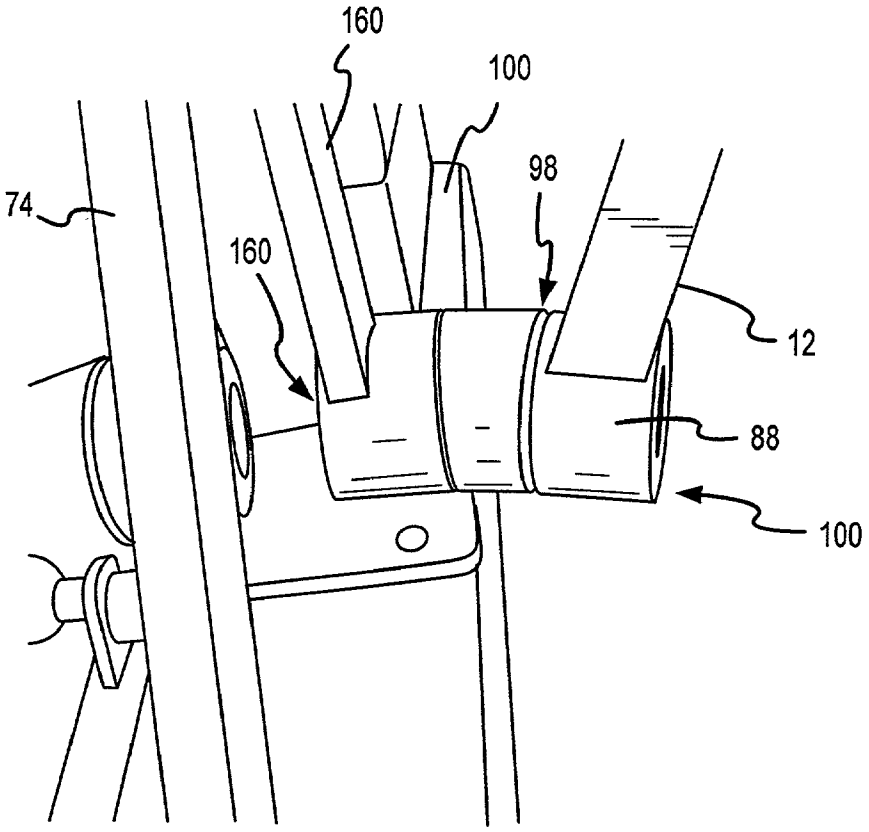

FIG.42

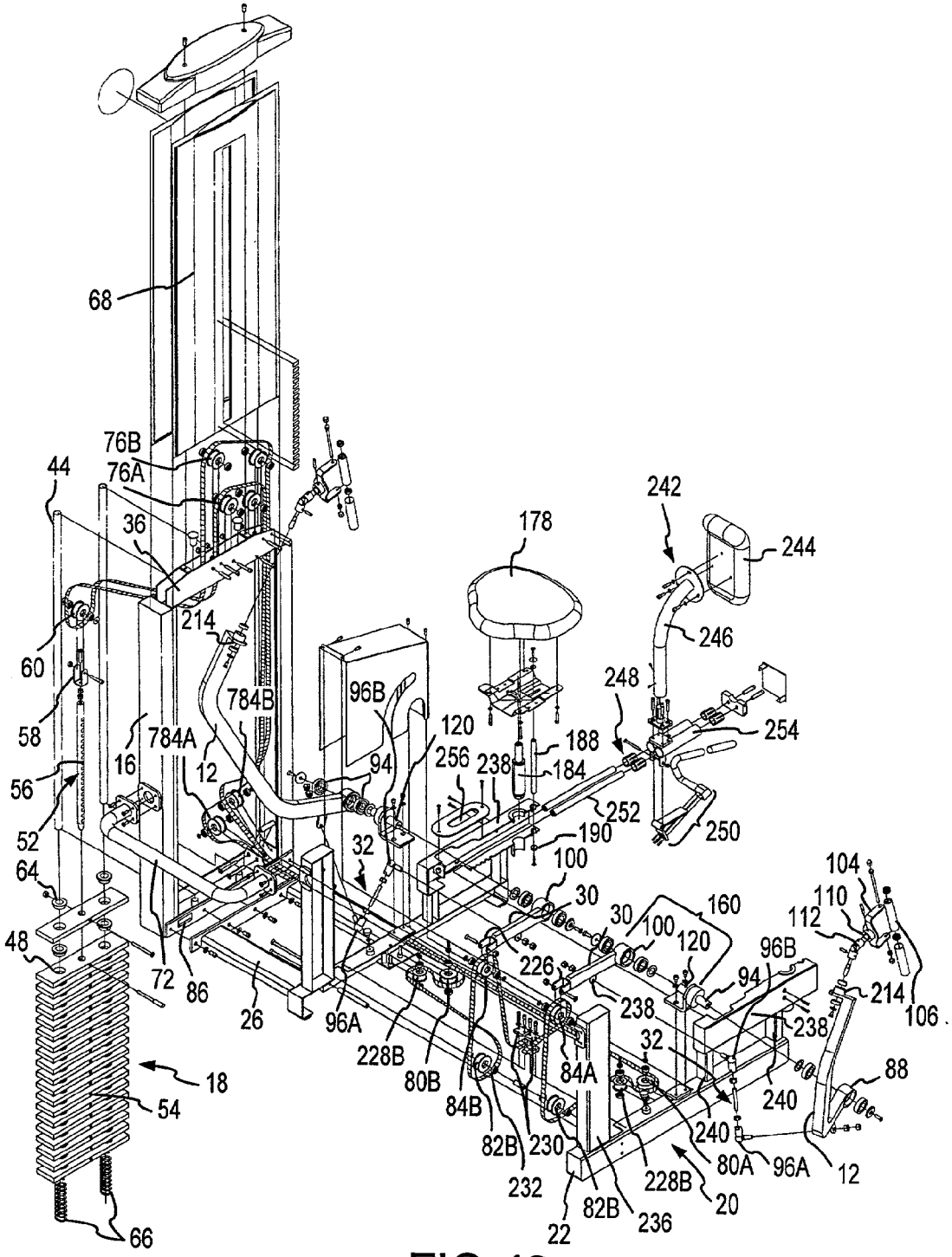
68
76B
76A
44
36
214
60
58
56
52
64
48
18
54
66
784B
784A
16
12
72
86
26
96B
94
120
256
238
184
188
178
242
244
246
248
254
252
250
190
100
32
30
160
226
96A
228B
80B
84B
82B
230
232
84A
22
236
20
80A
240
104
110
112
106
88
214

FIG.43

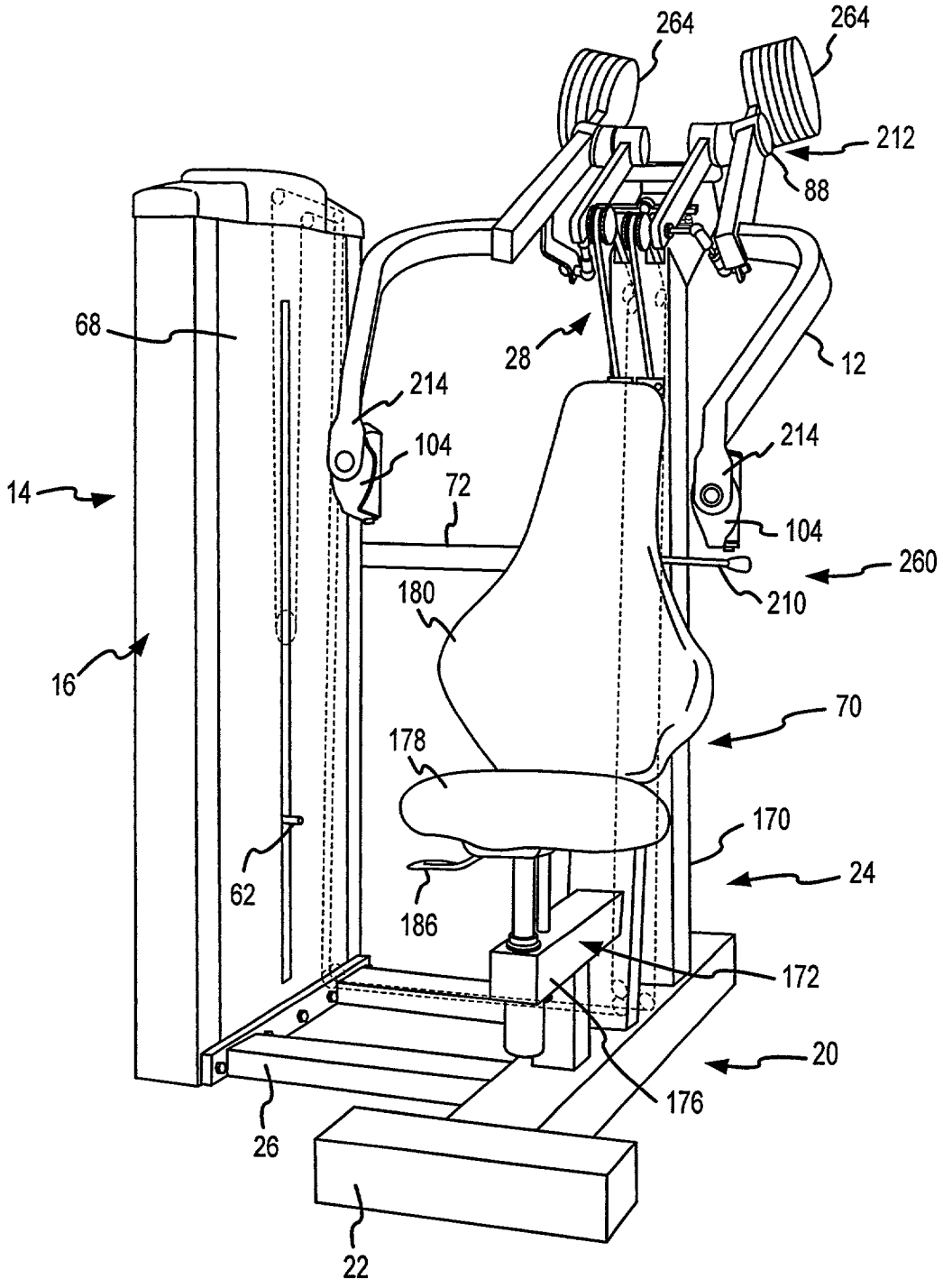
264
264
212
88
68
28
12
214
104
214
14
72
104
260
180
210
16
70
178
170
24
62
186
172
20
176
26
22

FIG.44

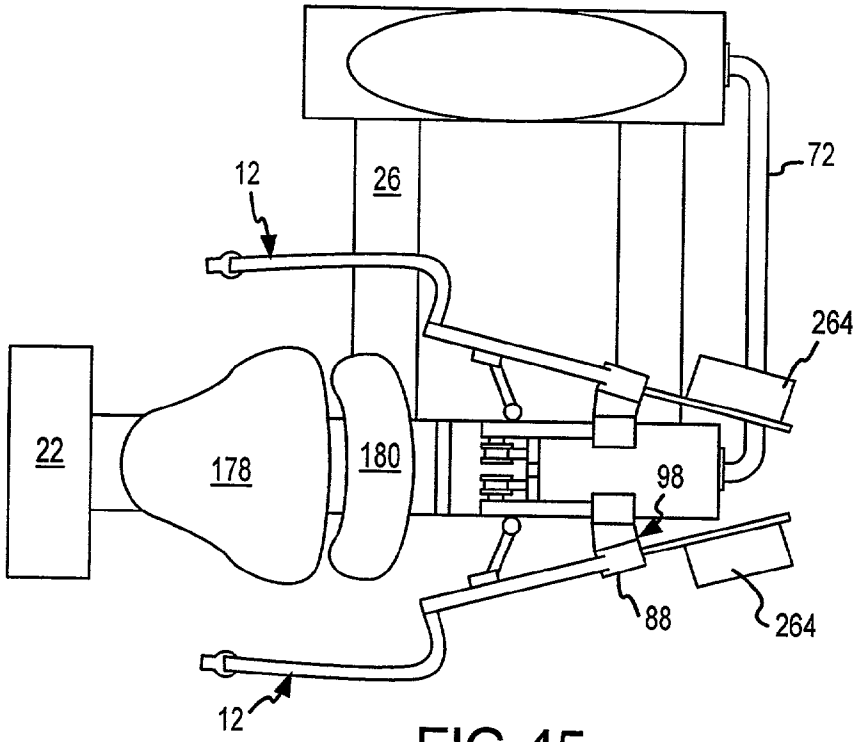

FIG.45

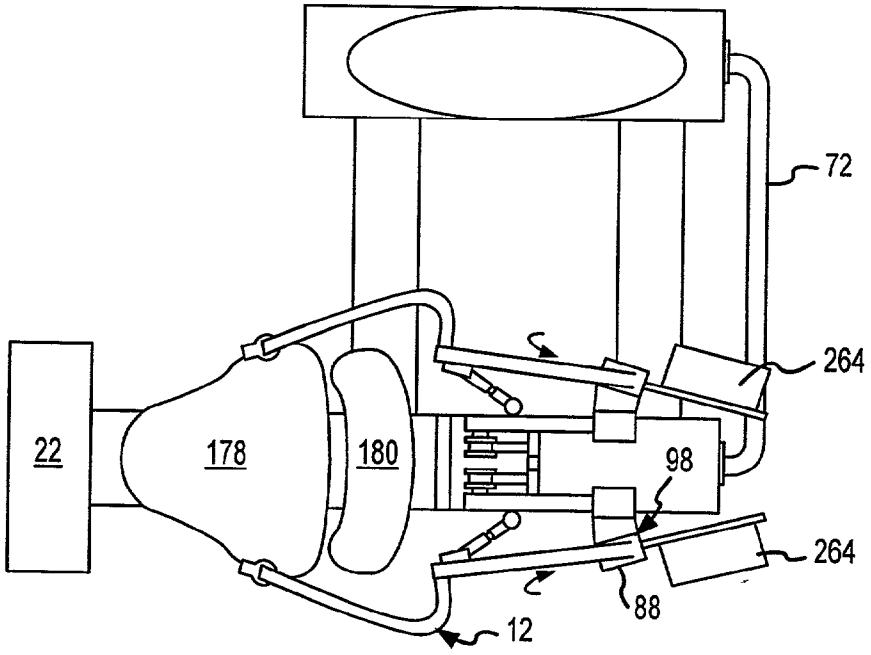

FIG.46

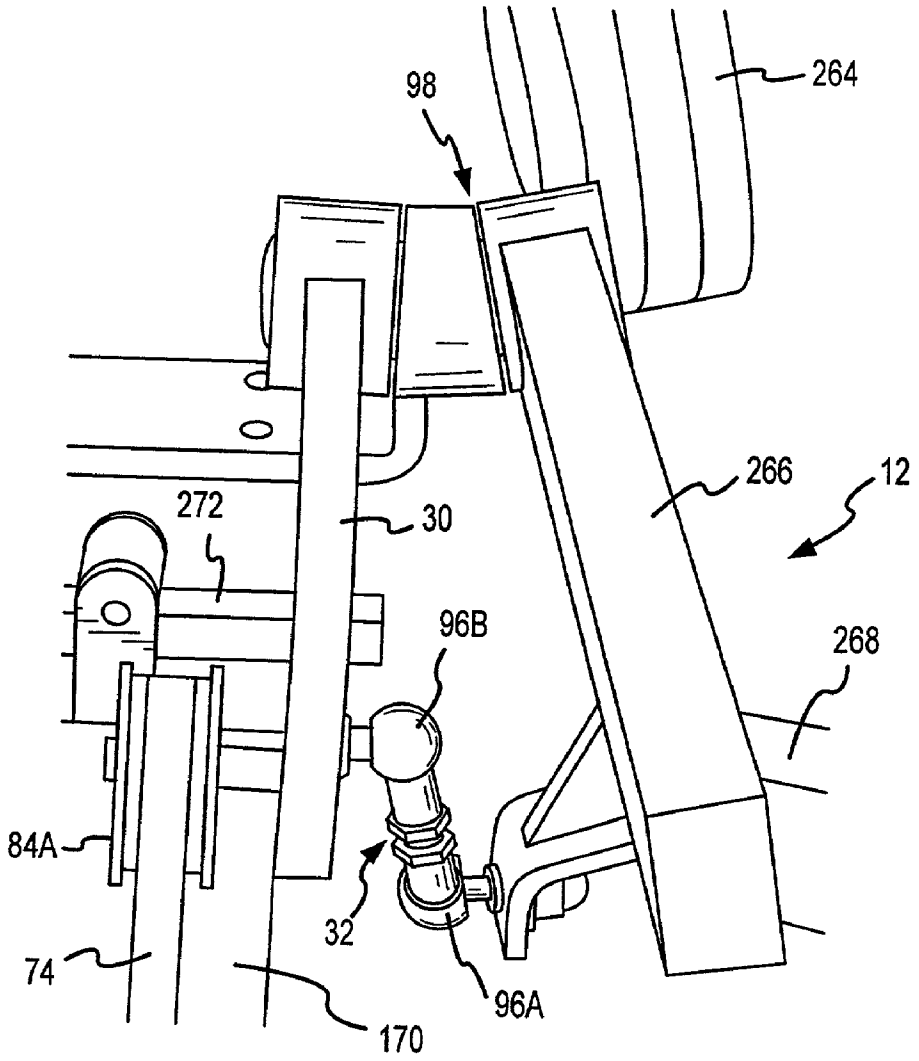

FIG.47

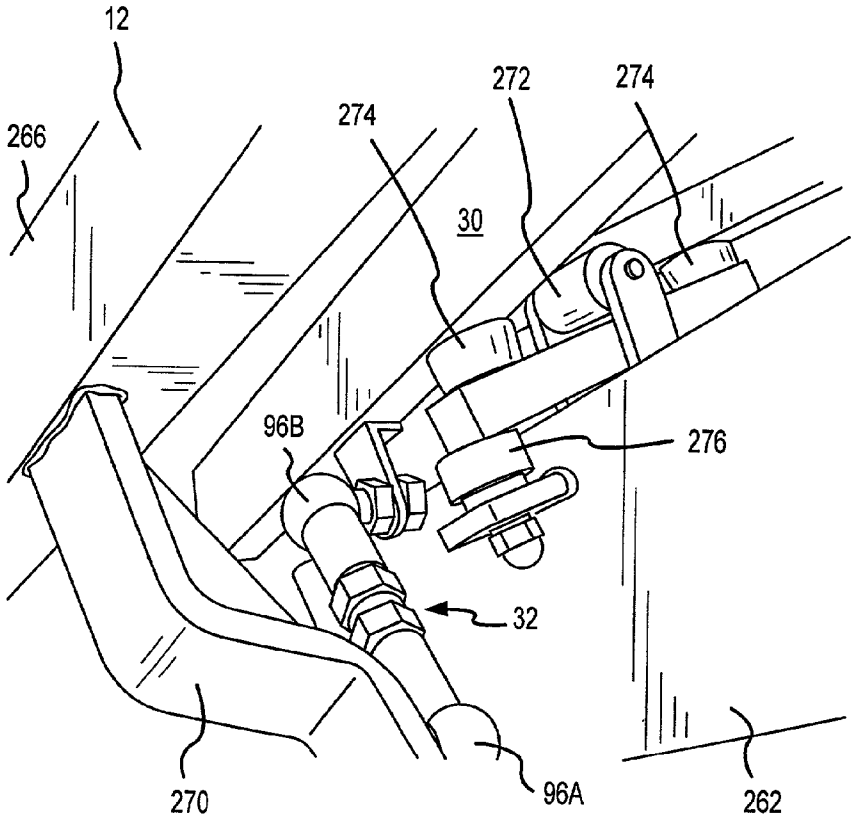

FIG.48

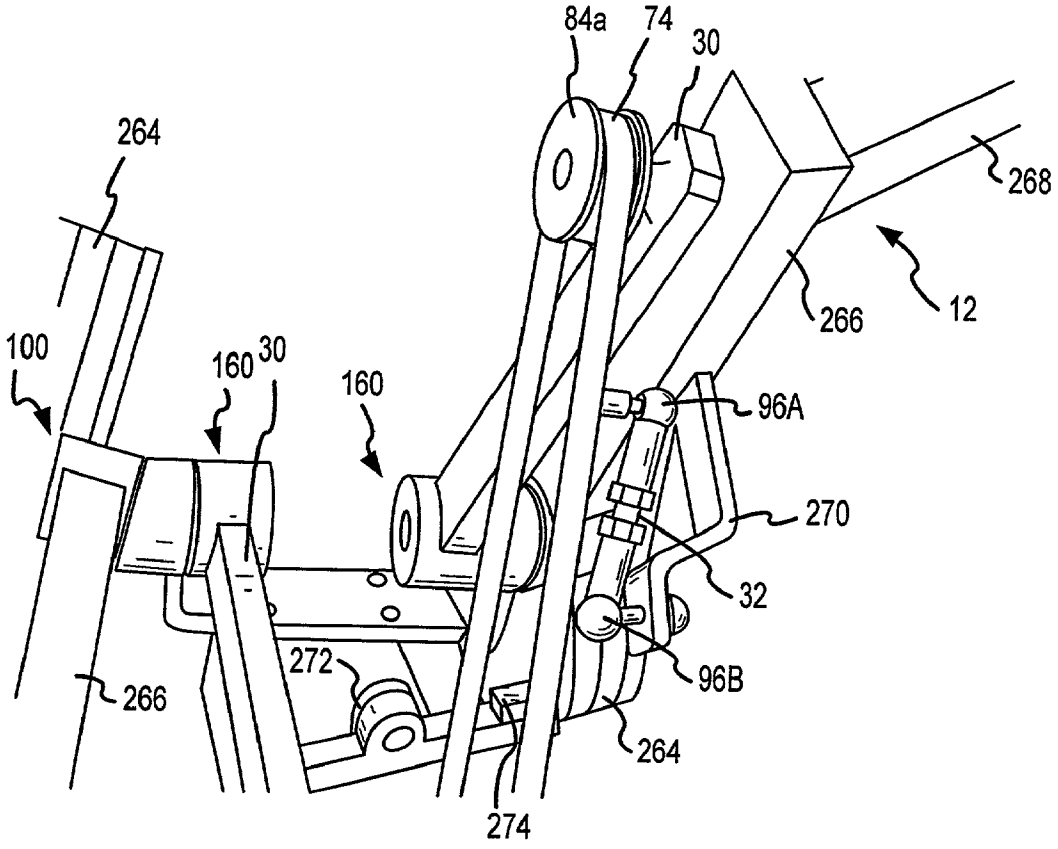
84a
74
30
264
268
266
12
100
160
30
160
96A
270
32
272
96B
266
264
274

FIG.49

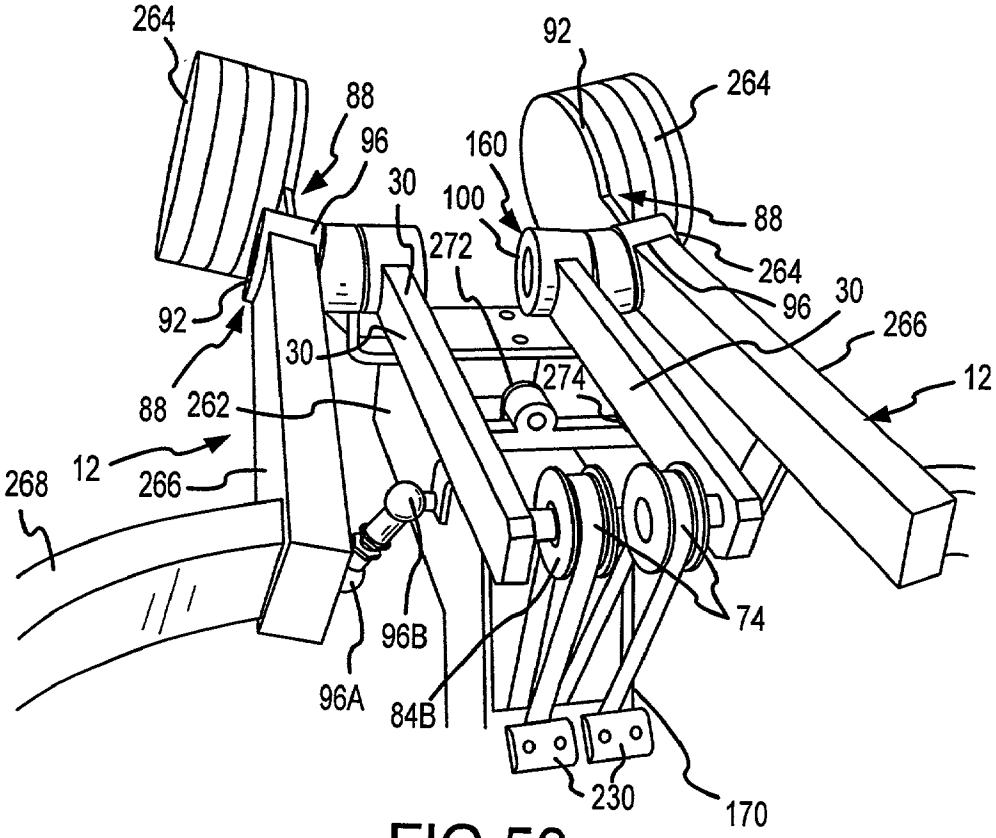
264
88
96
30
92
88
262
12
266
268
96A
96B
84B
30
272
100
160
92
264
88
264
96
30
266
12
274
74
230
170

FIG.50

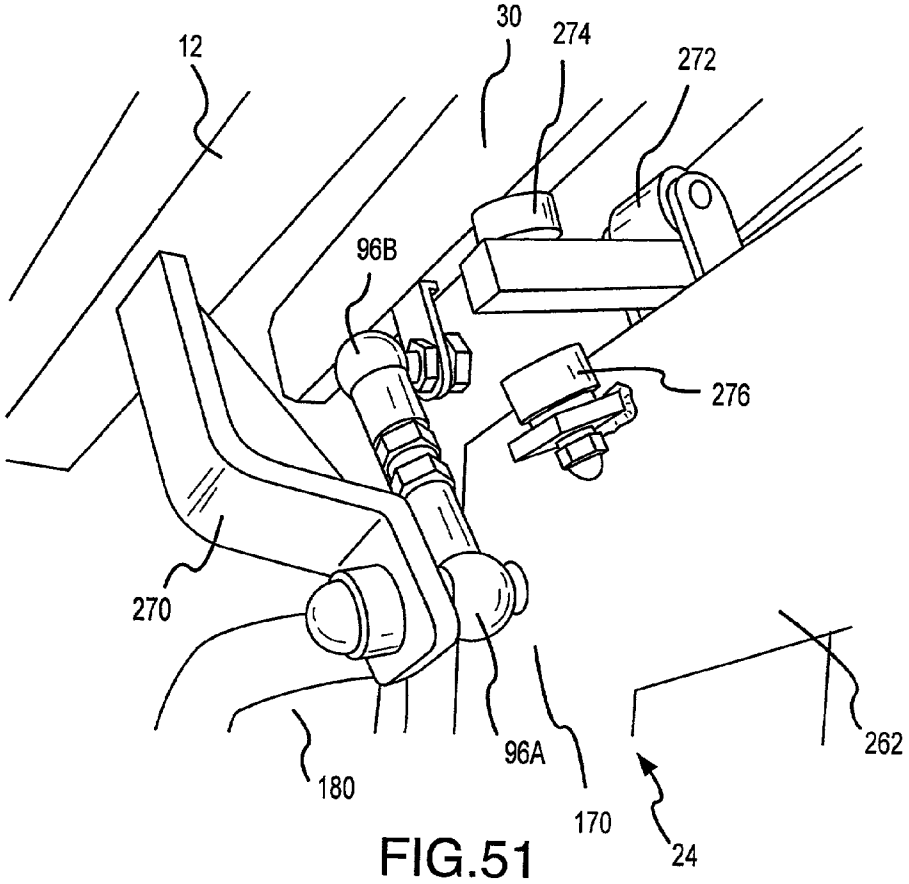

FIG.51

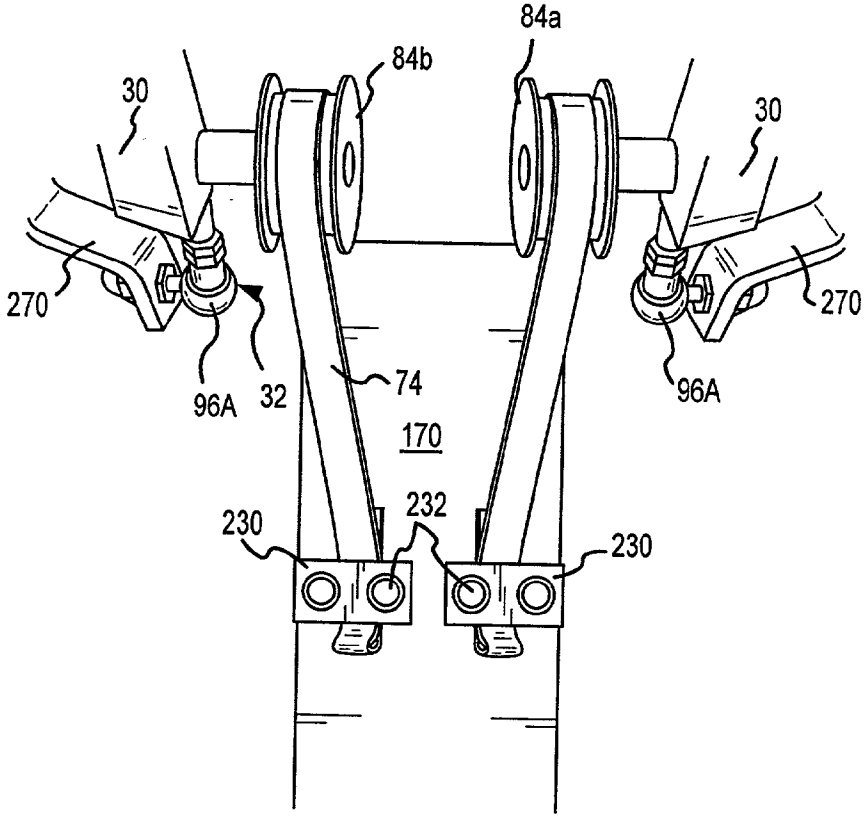

FIG.52

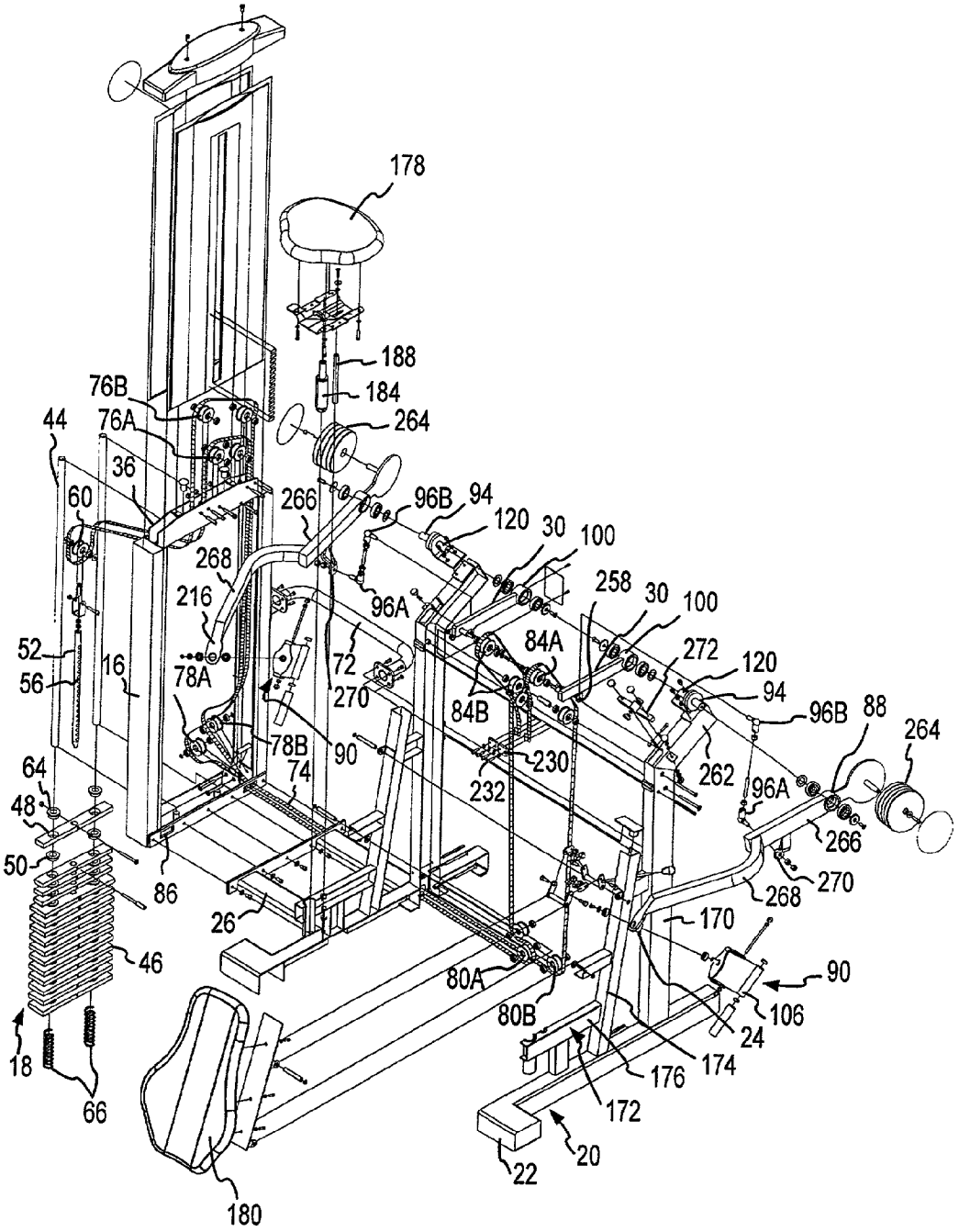
178
188
184
264
76B
76A
44
36
60
266
96B
94
120
30
100
268
216
96A
258
30
100
52
56
16
78A
72
270
84A
272
120
94
84B
96B
88
264
78B
90
230
262
64
74
232
96A
48
266
50
86
268
270
26
170
46
80A
90
80B
106
24
18
176
174
66
172
20
22
180

FIG.53

EXERCISE MACHINE PROVIDING FOR NATURAL MOVEMENT

CROSS-REFERENCE TO RELATED APPLICATIONS

[0001] This application is a nonprovisional application based on U.S. Provisional Application Serial No. 60/201,621, filed May 3, 2000, entitled "Exercise Equipment With Floating Wrist Structure and a Back Extension Invention." This application is related to U.S. patent application Ser. No._____ filed on May 2, 2001 (Express Mail No. EL 759299717 US) entitled "Exercise Device with Body Extension Mechanism," and is also related to U.S. patent application Ser. No._____ filed on May 2, 2001 (Express Mail No. EL 759299694 US) entitled "Exercise Equipment with Multi-Positioning Handles." The contents of these three applications are hereby incorporated by reference herein in their entirety.

REFERENCE TO APPENDIX

[0002] This application includes an Appendix consisting of 14 total pages. This appendix includes four separate figures labeled as FIGS. **A7**, **A29**, **A43**, and **A53**. These figures are numbered to correspond with the associated components which is also included in the Appendix. The contents of the Appendix are hereby incorporated by reference as though fully set forth herein.

FIELD OF THE INVENTION

[0003] This invention relates to the field of exercise equipment, and particularly to the field of multi-position, convertible exercise equipment. More particularly, this invention relates to multi-position, convertible exercise equipment providing for natural converging or diverging motion.

BACKGROUND OF THE INVENTION

[0004] As society in general becomes more health conscious, the design of exercise equipment changes to reflect the need to offer more and different types of exercises. For instance, the treadmill machine has developed over the years into the elliptical motion machine in response to user's desires to have a machine that replicates running without the impact stress accompanying the use of a treadmill.

[0005] With respect to load-bearing exercise equipment, the trend has been for a while to attempt to replicate the overall benefits of free-weight exercises in a machine. The result has been the development of complex exercise equipment that is expensive to purchase and sometimes difficult to use. The results, too, when compared to free-weight exercise, are not as well-rounded. There remains a gap in fitness quality between the convenience of machine-based load-bearing exercise equipment and the overall benefits (including coordination and collateral strengthening) associated with free weight exercises.

[0006] In the development of machines that replicate the use of free-weights, very little attention has been paid to replicating the actions of everyday life. Exercise equipment design has focused more on replicating free-weight exercises than replicating the natural motions one makes on a daily basis, such as lifting a box up to one's torso, pushing a cart, lifting an object over one's head, and the like. Exercise equipment that functions in a manner that replicates daily natural movements would help strengthen those oft-used muscles and help make daily living easier. The appeal of such equipment may also cross over from pure fitness buffs to those who are more practically oriented in their fitness endeavors.

[0007] What is needed in the art is exercise equipment designed to more closely replicate the natural motions of the activities of daily life.

SUMMARY OF THE INVENTION

[0008] The present invention solves the need in the art for exercise equipment designed to more closely replicate the natural motions of the activities of daily life by providing an exercise machine that simulates the natural body movements such as pulling, pushing, pushing up and pulling down.

[0009] The exercise machine generally has an arm assembly operably connected to a load such that actuation of the arm assembly in turn actuates the load. The arm assembly provides for naturally converging or diverging motion during the exercise stroke by way of its connection to the base frame at an angle extending away from the base frame. A rotatable handle is also attached to the arm assembly. The load is operably connected to the arm assemblies by the belt/pulley system which is operably connected to a pulley arm which is operably connected to the arm assemblies through a rigid force transfer link that provides for movement in three-dimensions.

[0010] In accordance with one embodiment, the exercise machine has a base frame, a load movably attached to the base frame, an arm assembly and a bar operably attached to the base frame, a load actuation system operably attached between the movable load and the bar and a force transfer link operably connected between the arm assembly and said bar. The operable connections are such that movement of the arm assembly causes said force transfer link to move, which causes said bar to move, which causes said load actuation system to move, which moves said load.

[0011] The force transfer link may have a first ball and socket joint at a first end operably connected to the arm assembly and may have a second ball and socket-joint at a second end operably connected to the bar. The operable connection the arm assembly and the bar may be a direct drive connection or an indirect drive connection. The bar may be further comprised of a short lever arm and a long lever arm, in which the second end of the force transfer link is operably connected to the short lever arm, and the long lever arm is operably connected to the load actuation system.

[0012] The present invention further provides an exercise machine wherein the bar is attached to the frame by a pivotal connection, and movement of the short lever arm by the force transfer link causes the longer lever arm to pivot about the pivotal connection to actuate said load actuation system. The pivotal connection may be at an angle to the base frame to provide for natural converging and diverging motion during the exercise stroke.

[0013] The present invention also provides a belt/pulley system for an exercise machine having a load pulley operably attached to a load; at least one pair of directing pulleys, at least one transverse stack frame pulley, at least one transition pulley and at least one set-up pulley operably

attached to the frame of the exercise machine; at least one end pulley operably attached to an arm assembly; and a closed loop belt extending around the load pulley, upwardly to at least one pair of directing pulleys, downwardly to at least one transverse stack frame pulley, outwardly to at least one transition pulley, over to at least one set-up pulley and upwardly to at least one end pulley. The belt terminates in an end stop connected to the base frame.

[0014] The belt/pulley system provides for movement of the end pulley by movement of the arm assembly, which causes the load to be applied to the arm assembly through actuation of the belt/pulley system.

BRIEF DESCRIPTION OF THE DRAWINGS

[0015] **FIG. 1** is a front perspective view of a pull-down exercise machine, in accordance with one embodiment of the present invention.

[0016] **FIG. 2** is a top plan view of a pull-down exercise machine in the rest position, in accordance with one embodiment of the present invention.

[0017] **FIG. 3** is a top plan view of a pull-down exercise machine in the full extension position, in accordance with one embodiment of the present invention.

[0018] **FIG. 4** is a front right perspective view of a pull-down exercise machine in which the left arm assembly is in the full extension position, in accordance with one embodiment of the present invention.

[0019] **FIG. 5** is a close-up view of a first pivot mechanism and a second pivot mechanism for a lateral pull-down exercise machine in which the left arm assembly is in a full extension position, in accordance with one embodiment of the present invention.

[0020] **FIG. 6** is a close-up view of the belt, end attachments and end pulleys for a pull-down exercise machine in the rest position, in accordance with one embodiment of the present invention.

[0021] **FIG. 7** is an exploded view of a pull-down exercise machine, in accordance with one embodiment of the present invention.

[0022] **FIG. 8** is a side elevation view of a weight stack assembly showing an embodiment of the cable/pulley system, in accordance with one embodiment of the present invention.

[0023] **FIG. 9** is an alternative embodiment of a belt/pulley system within the weight stack, in accordance with one embodiment of the present invention.

[0024] **FIG. 10** is an alternative embodiment of a belt/pulley system allowing for independent movement of each arm assembly, in accordance with one embodiment of the present invention.

[0025] **FIG. 11** is a cross-sectional view of a rotatable handle assembly for use with the pull machines, in accordance with one embodiment of the present invention.

[0026] **FIG. 12** is a top plan view of the pivot ball used in the rotatable handle assembly shown in **FIG. 11**, in accordance with one embodiment of the present invention.

[0027] **FIG. 13** is a side perspective view of the pivot ball used in the rotatable handle assembly shown in **FIG. 11**, in accordance with one embodiment of the present invention.

[0028] **FIG. 14** is a cross-sectional view of an alternative rotatable handle assembly for use with the push machines, in accordance with one embodiment of the present invention.

[0029] **FIG. 15** is a side elevation view of the adjustable seat assembly for a seated row exercise machine, in accordance with one embodiment of the present invention.

[0030] **FIG. 16** shows a front perspective view of a seated bench press exercise machine, in accordance with one embodiment of the present invention.

[0031] **FIG. 17** is a top plan view of a seated bench press exercise machine in the rest position, in accordance with one embodiment of the present invention.

[0032] **FIG. 18** is a top plan view of the seated bench press exercise machine in the full extension position, in accordance with one embodiment of the present invention.

[0033] **FIG. 19** is a side elevation view of an adjustable seat assembly for a seated bench press exercise machine, in accordance with one embodiment of the present invention.

[0034] **FIG. 20** is a side elevation view of an adjustable seat assembly for a seated row exercise machine showing the seat back in the recline position, in accordance with one embodiment of the present invention.

[0035] **FIG. 21** is a side elevation view of an adjustable seat assembly for a seated bench press exercise machine showing the seat back in the upright position, in accordance with one embodiment of the present invention.

[0036] **FIG. 22** shows a close-up view of the seat back adjustment mechanism in the recline position, in accordance with one embodiment of the present invention.

[0037] **FIG. 23** shows a close-up view of the seat back adjustment mechanism in the over center locked upright position, in accordance with one embodiment of the present invention.

[0038] **FIG. 24** shows the first pivot mechanism extending at an angle back and away from the front of the T-shaped base support of a seated bench press exercise machine in the rest position, in accordance with one embodiment of the present invention.

[0039] **FIG. 25** shows the first pivot mechanism extending at an angle outward and back from the T-shaped base of a seated bench press exercise machine in which the arm assembly is midway through the exercise stroke position, in accordance with one embodiment of the present invention.

[0040] **FIG. 26** shows a top plan view of the first pivot mechanism of a seated bench press exercise machine which extends back and out from the T-shaped base in which the left arm assembly is in a full extension position, in accordance with one embodiment of the present invention.

[0041] **FIG. 27** shows a side elevation view of a pulley bar for a seated bench press exercise machine, in accordance with one embodiment of the present invention.

[0042] **FIG. 28** is a rear perspective view of a pulley bar for a seated bench press exercise machine in which the arm assembly is in the midway through the exercise stroke

position thereby raising end pulley away from the set up pulley, in accordance with one embodiment of the present invention.

[0043] **FIG. 29** is an exploded view of a seated bench press exercise machine, in accordance with one embodiment of the present invention.

[0044] **FIG. 30** is a front perspective view of a seated row exercise machine, in accordance with one embodiment of the present invention.

[0045] **FIG. 31** is a top plan view of a seated row exercise machine in the rest position, in accordance with one embodiment of the present invention.

[0046] **FIG. 32** is a top plan view of a seated row exercise machine in the full extension position, in accordance with one embodiment of the present invention.

[0047] **FIG. 33** is a right perspective view of a chest pad support bar, a sliding assembly and a latch assembly for a seat assembly used with a seated row exercise machine, in accordance with one embodiment of the present invention.

[0048] **FIG. 34** is a close-up view of the support rails and sliding rails of the sliding assembly for use with a seated row exercise machine, in accordance with one embodiment of the present invention.

[0049] **FIG. 35** is a side elevation view of the sliding assembly of a seated row exercise machine in which the latch assembly is in a first locked position, in accordance with one embodiment of the present invention.

[0050] **FIG. 36** is a side elevation view of a latch assembly for a seated row exercise machine in which the latch assembly is in a second unlocked position allowing for sliding of the chest pad support, in accordance with one embodiment of the present invention.

[0051] **FIG. 37** is a bottom perspective view of the latch mechanism of a seated row exercise machine in a closed latch position, in accordance with one embodiment of the present invention.

[0052] **FIG. 38** is a close-up view of a latch assembly for use with a seated row exercise machine, in accordance with one embodiment of the present invention.

[0053] **FIG. 39** is a top plan view of the connection of the arm assemblies to the pulley bars for a seated row exercise machine in the rest position, in accordance with one embodiment of the present invention.

[0054] **FIG. 40** is a top plan view of a seated row exercise machine in which the arm assemblies are in the full extension position, in accordance with one embodiment of the present invention.

[0055] **FIG. 41** is a side elevation view of a seated row exercise machine in the full extension position, in accordance with one embodiment of the present invention.

[0056] **FIG. 42** is a front elevation view of a first pivot mechanism for a seated row exercise machine in a position midway through exercise stroke, in accordance with one embodiment of the present invention.

[0057] **FIG. 43** is an exploded view of a seated row exercise machine, in accordance with one embodiment of the present invention.

[0058] **FIG. 44** is a front perspective view of a seated shoulder press exercise machine, in accordance with one embodiment of the present invention.

[0059] **FIG. 45** is a top plan view of a shoulder press exercise machine in the rest position, in accordance with one embodiment of the present invention.

[0060] **FIG. 46** is a top plan view of a shoulder press exercise machine in the full extension position, in accordance with one embodiment of the present invention.

[0061] **FIG. 47** is a front plan view of a first pivot mechanism showing the angle at which the arm assembly extends outwardly from the support mechanism, in accordance with one embodiment of the present invention.

[0062] **FIG. 48** is a close-up view of the force transfer link and the pulley bar stopper arms for a shoulder press exercise machine, in accordance with one embodiment of the present invention.

[0063] **FIG. 49** is a front left perspective view of the left arm assembly of a shoulder press exercise machine in a full extension position thereby extending the end pulley in an upward arcuate direction away from the set up pulley, in accordance with one embodiment of the present invention.

[0064] **FIG. 50** is a front left perspective view of the first pivot mechanism and second pivot mechanism of a shoulder press exercise machine in the rest position, in accordance with one embodiment of the present invention.

[0065] **FIG. 51** is a close-up view of the force transfer link and the pulley bar stoppers, in accordance with one embodiment of the present invention.

[0066] **FIG. 52** is a front elevation view of the end connections of the belt/pulley system attached to the support member, in accordance with one embodiment of the present invention.

[0067] **FIG. 53** is an exploded view of a shoulder press exercise machine, in accordance with one embodiment of the present invention.

DETAILED DESCRIPTION OF PREFERRED EMBODIMENTS

[0068] The present invention is directed to exercise equipment that provides for natural converging or diverging motions during use of the equipment. Examples of exercise machines in accordance with the present invention include a seated bench press machine **112 (FIG. 16)**, a seated row machine **234 (FIG. 30)**, a pull-down machine **10 (FIG. 1)**, and a seated military or shoulder press machine **260 (FIG. 44)**. Each of these machines is constructed such that the user's range of motion is either naturally converging or diverging depending on the exercise. For example, with respect to the seated bench press machine **112**, the natural movement is a converging one in which the arm assemblies start a set distance apart and as the user presses the arm assemblies forward, the hands converge to a point closer together (see **FIGS. 17 and 18**). With respect to the pull-down machine **10**, the natural motion is a diverging one in which the user begins with the hands at a close distance and as the user pulls the arm assemblies **12** down, the hands diverge to a point further apart (see **FIGS. 31 and 32**).

[0069] Initially, the machines will be described with respect to common elements and will be referred to generally as an exercise machine. These common elements include a weight stack **14** having a load frame **16** and a load **18**, a base frame **20** having a base member **22** and a support mechanism **24**, two lateral support members **26**, a belt/pulley system **28**, an arm assembly **12**, a pulley bar **30** and a force transfer link **32**. The common base frame **20** and support mechanism **24** provide a base for the attachment of elements of the machines that are specific to each type of machine. For purposes of clarity, the common elements will be described by reference to the pull-down machine **10** shown in **FIGS. 1 and 7**. The remaining machines described in detail below all have similar features.

[0070] The weight stack preferably includes a load frame **16** which has a pair of upwardly extending side members **34**. An upper frame member **36** extends between and connects the upper portion of the side frame members **34**, and a lower frame member **38** extends between and connects the lower portion of the side frame members, defines a base portion **42** and has a pair of spaced apart guide posts **40**, each extending upwardly from the base portion **42** and generally transverse to the floor upon which the base portion rests **42**. The pair of guide posts **40** are adapted to cooperate respectively with a pair of spaced apart guide rails **44**.

[0071] The load **18** is preferably a plurality of weight plates **46**, which are generally oriented between the side frame members **34**. Each plate **46** defines a pair of guide apertures **43** extending between a top face of the plate and a bottom face of the plate, and are adapted to cooperate with the pair of spaced apart rails **44**. Each plate **46** also defines a weight selection bar aperture **50** located between the spaced apart guide apertures **48**, and adapted to cooperate respectively with a weight selection bar **52**. Each plate defines a weight pin aperture **54**, preferably on the side of the plate that faces the user during exercise. The weight plates **46** and the guide rails **44** are well known in the art.

[0072] The guide rails **44** extend from the base portion **42** through the guide apertures **43** of each plate to the top portion of the weight stack frame **16**. The weight selection bar **52** has a plurality of pin apertures **56** adapted to correspond with the weight pin apertures **54** in each plate **46**. The top of the weight selection bar **52** is connected to a U-shaped bracket **58** which is in turn connected to a load pulley **60** in the belt/pulley system **28**.

[0073] To engage the desired amount of weight for exercise, a weight pin **62** is inserted through the appropriate weight pin aperture **54** in the appropriate plate **46** and through the corresponding weight pin aperture **56** in the weight selection bar **52**. This allows for the selected plate **46** and all plates located above the selected plate to be used in the exercise.

[0074] The plates **46** move upwardly and downwardly along the spread apart guide rails **44** during exercise. Preferably, each guide aperture **48** includes a bushing fit **64** therewithin adapted to engage the guide rails **44** and to facilitate a smooth raising and lowering of the weight stack **14**.

[0075] A pair of springs **66** is provided at the bottom of the weight stack **14** that fit over the guide rails **44** and extend between the frame base **20** and the bottom plate **46** of the weight stack. The springs **66** provide a shock absorbing function in the event that the user allows the weight stack **14** to return to the downward position too vigorously. This shock absorbing function eases wear and tear on the exercise machine.

[0076] A cover member **68** is also provided for the weight stack **14** to shield the moving load **18** during use, for purposes of user safety and protection. This cover member **68** is adapted to fit within the load frame **16**.

[0077] Referring still to **FIG. 1**, the bottom portion of the weight stack **14** is connected to a base frame **20** by two lateral support members **26**. The base frame **20** has a base member **22** and a support mechanism **24** which supports a seat assembly **70** and the arm assemblies **12**. Additionally, a clearance bar **72** preferably connects one of the side members **34** of the load frame **16** to the support mechanism **24**. This clearance bar **72** keeps people passing by the exercise machine from potentially interfering with its movement during use.

[0078] Each exercise machine uses a belt/pulley system **28** which enables the user to move the load **18** during exercise. Generally, the belt/pulley system **28** for all the machines includes a load pulley **60**, a belt **74**, two pair of directing pulleys **76***a*, **76***b*, a pair of transverse stack frame pulleys **78***a* and **78***b*, a pair of transition pulleys **30***a* and **30***b*, a pair of set-up pulleys **82***a* and **82***b* and a pair of end pulleys **84***a* and **84***b*. Preferably, the belt **74** extends around the load pulley **60**, upwardly to at least one pair of directing pulleys **76***a* and **76***b*, downwardly to at least one transverse stack frame pulley **76***a*, **76***b*, outwardly to at least one transition pulley **80***a*, **80***b*, then to at least one set-up pulley **82***a*, **82***b* and upwardly to at least one end pulley **84***a*, **84***b*.

[0079] The belt/pulley system **28** generally is considered a closed loop system. This closed loop system is preferably achieved by passing a belt **74** through the belt/pulley system **28** and attaching both open ends of the belt to a point on the support mechanism such that the ends are proximate to each other. Thus during exercise, the user never actually pulls on an end of the belt **74** unlike with typical cable pulley systems, one end of the cable is connected to the weight stack and the other end connected to the handle or actuating arm. A benefit of this closed loop system is that a user can actuate the arm assemblies **12** either individually or simultaneously.

[0080] The belt **74** is preferably a high tensile strength plastic belt but could also be a chain, wire cable, or any other type of flexible material capable of supporting the weight of the load **18** and the strain caused throughout the pulley system **28** during exercise.

[0081] As shown in **FIG. 1**, the belt/pulley system **28** operably connects the load **18** to a pulley arm **30** which in turn is operably connected to an arm assembly **12**. Preferably, a load pulley **60** is connected to a U-shaped bracket **58**, which is in turn connected to the weight selection bar **52**. The belt **74** extends around the load pulley **60** and upwardly to a first and second pair of directing pulleys **76***a*, **76***b* attached to the upper frame member **36**. The second pair of directing pulleys **76***b* are mounted to the top portion of the load frame **36** at a higher point than the first pair of directing pulleys **76***a* in order to keep the belt **74** spaced apart, and to prevent the belt from rubbing against itself or becoming entangled.

[0082] The first and second pair of directing pulleys **76***a*, **76***b* direct the belt **74** downwardly through the rear portion of the load frame **16** to a pair of transverse stack frame pulleys **78***a*, **78***b*. The transverse stack pulleys **78***a*, **78***b* rotate or twist the belt **74** in a ninety degree angle due to their orientation with respect to the directing pulleys **76***a*, **76***b* . The belt **74** is then directed through a belt aperture **86** in the bottom portion of the weight stack frame **33** into one of the lateral support members **26**.

[0083] At this point, the belt **74** is then preferably transferred through a number of pulleys including a transition pulley **80***a*, **80***b*, a set-up pulley **82***a*, **82***b* and an end pulley **84***a*, **84***b*. The belt **74** preferably terminates at a fixed point on the support mechanism **24**. This attachment to the support member **24** closes the belt loop system and completes the operable belt/pulley system **28**.

[0084] A number of additional pulleys may also be included between the transition pulley **80***a*, **80***b* and the set-up pulley **82***a*, **82***b*, depending on the structure and type of the exercise machine used. These additional pulleys can function as tensioning or aligning pulleys. Examples of additional pulleys and the routing of the belt pulley system **28** relating to specific machines will be provided in more detail below.

[0085] Each exercise machine also has at least one arm assembly **12** for actuating the load **18**. More preferably, each exercise machine has two arm assemblies **12**. As shown in **FIG. 31**, an arm assembly **12** is operably connected to the load **18** through a force transfer link **32**, a pulley bar **30** and the belt/pulley system **28**. The arm assemblies **12** and the corresponding operable connections to the belt/pulley system **28** are symmetrical with respect to the exercise machine, and therefore will be described only with respect to one arm assembly and the operable connections corresponding thereto.

[0086] The arm assembly preferably **12** has a first pivot housing **88** at a first end and a handle assembly **90** rotatably connected to a second end. The arm assembly **12** is rotatably connected to the base member **22** through a first pivot mechanism **92**. The first pivot mechanism **92** includes the first pivot housing **88** and a first pivot axle **94** connected to the support mechanism **24**. The first pivot mechanism **92** creates an angled connection **98** between the arm assembly **12** and the base member **22**, in which the arm assembly extends at an angle away from the base member. This angle provides for the natural converging or diverging exercise motions of the exercise machine.

[0087] The arm assembly **12** is operably connected to a pulley bar **30** through a force transfer link **32**. The force transfer link **32** has a ball and socket joint **96***a*, **96***b* at both ends which operably connects to the arm assembly and the pulley bar. The force transfer link structure **32** allows for movement in three dimensions. This rigid, rotatable structure **32** allows for the converging and diverging motions that are facilitated by the angled joint **98** created by the connection of the arm assembly at the first pivot housing.

[0088] The pulley bar **30** has a second pivot housing **100** and a pulley end portion. The pulley bar **30** is operably connected to a second end of the force transfer link **32**, which as described above is preferably a ball and socket joint **96***b*. The pulley bar **30** is also connected to the end pulleys **84***a*, **84***b* at the pulley end portion **102**. This operably connects the pulley bar **30** to the belt/pulley system **28** and to the arm assembly **12**.

[0089] The rotatable handle assembly **90** has two preferred embodiments. A first embodiment is for use with pull machines, such as the pull-down machine **10** and the seated row machine **234**. This handle assembly **90** is shown in **FIG. 11**. A second embodiment is for use with push machines, such as the seated bench press **112** and the shoulder press **260** machines. This handle assembly **90** is shown in **FIG. 14**.

[0090] Referring first to **FIG. 11**, the handle assembly **90** includes a handle bracket **102** having a base member **104**. The base member **104** is preferably U-shaped, with a grasping portion **106** rotatable mounted between the legs of the U-shaped base member **104**. The grasping portion **106** is attached to the opposing legs of the U-shaped base member **104** by a bearing structure **108** at each end of the grasping member **106**. The grasping member can be cylindrical in shape, or can be shaped to receive a person's hands and fingers for comfortable gripping and load bearing. The bottom portion of the U-shaped base **104** defines a collar **110** having a recess for receiving a first axle **94**. The first axle **94** is attached in the recess by a through pin **114**. The through pin **114** runs approximately parallel with the bottom portion of the U-shaped base **104**. However, any known means for attaching the axle **94** with respect to the collar **110** would likely be acceptable. This recess may also take the form of a pair of flanges, and the through pin **114** could form a pivot axis to allow the handle **90** to pivot about the pivot connection formed between the flanges and the axle **94**.

[0091] The first axle **94** is in turn pivotally attached by a second pin **116** to a pivot ball **118**. The second pin **116** preferably extends parallel to the first pin **114**, but may extend in an angular orientation as desired. The second pin **116** defines a pivot axis about which the handle **90** rotates with respect to the ball **118**. The pivot ball **118** is in turn attached to a second axle **120** by a pivot pin, the second pivot pin **116** defining a second pivot axis about which the ball **118** pivots with respect to the second axle **120**. The end of the first axle **94** attached to the pivot ball **118** defines a pair of opposing flanges **122** that surround the sides of the pivot ball. The end of the second axle **120** that is attached to the pivot ball **118** also defines a pair of opposing flanges **124** used in conjunction with the pivot pin **116** to attach to the pivot ball **118**. The pivot pins attaching the flanges **122** of the first axle **94** and the second axle **120** to the pivot ball **118** can be continuous pivot pins extending through the pivot ball, or can be separate pivot pins positioned through the flanges and partially extending into the pivot ball **118** yet still forming a pivot axis **128** for the respective set of flanges.

[0092] The pivot axis **128** formed by the pivot pins **126** attaching the first axle **94** to the pivot ball **118**is the first pivot axis. The pivot axis defined by the pins **126** attaching the flanges **124** on the second axle **120** to the pivot ball **118** define the second pivot axis **130**. The first (not shown) **128** and second **130** pivot axes are positioned orthogonally with respect to one another in their attachment to the pivot ball **118**. See **FIG. 12**. The first pivot axis **128**, with respect to **FIG. 11**, allows the handle bracket **104** to pivot about the first pivot axis **128** into and out of the flange. In that instance, the flanges **122** on the first axle **94** pivot with respect to the pivot ball **118**. The second pivot axis **130** formed between

the flanges **124** on the second axle **120** formed by the connection of the flanges **122** of the first axle **94** and the pivot ball **118**, allow the handle bracket **104** to pivot left and right about the second pivot axis **130** with respect to the orientation of **FIG. 11**. In this instance, the pivot ball **118** moves with respect to the flanges **124** of the second pivot axis **130**. The second end **132** of the second axle **120** defines a recess **138** which receives an end of a third axle **136**. The end of the third axle **136** is held within the recess **134** in the second end **132** of the second axle **120** by a pin **138** extending therethrough. The third axle **136** is mounted to the arm **12** of the exercise machine in a rotatable manner by two bearings **140***a*, **140***b* positioned inside of a sleeve **142**, through which the third axle extends **136**. The third axle **136** is held in position by a fastener **144** extending from the opposite side of the exercise arm **12** into the opposite end of the third axle **136**.

[**0093**] Through the rotational attachment of the third axle **136** to the exercise arm **12**, the first pivot axis **128**, and the second pivot axis **130**, the handle is allowed to articulate with respect to the exercise arm **12** about two pivot axes **128**, **130** orthogonally aligned to one another. The handle **90** may also rotate with respect to the pivot arm **12** about a longitudinal axis directed along the length of the interconnected structure extending from the exercise arm **12** to the handle bracket **104**. This structure allows for extreme flexibility in handle **90** position when coupled to an exercise device. For instance, if the arm of the exercise machine moves in two or three dimensions through the stroke of the exercise machine, the handle **90** as described above allows the user to naturally position his hands and wrists to best orient his hands and wrists during the exercise. The pins **114**, **138** attaching the first axle **94** to the collar **110** on the handle as well as the third axle **136** to the end of the second axle **120**, given the correct structural modifications, can also act as an additional pivot axes to provide four total pivot axis and one rotational axis. In addition, the hand grip **106** rotates with respect to the handle bracket **104** to provide yet another degree of freedom in allowing the user to automatically adjust his grip during the pulling exercise.

[**0094**] Referring to **FIG. 13**, the pivot ball **118** is formed of a short cylinder having beveled top **146** and bottom **148** edges transitioning from the cylindrical wall **150** to the flat top **152** and bottom **154** surfaces. Two flat spots **156***a*, **156***b* are formed in diametrically opposing positions along the outer curved sidewalls of the cylinder from the top to bottom of the cylinder. One set of flanges **122** engages the flat top **152** and bottom **154** of the cylinder and the other set of flanges **124** engages the flat sidewalls **156***a*, **156***b* of the cylinder.

[**0095**] **FIG. 14** shows an embodiment of the handle **90** used on exercise machines where the primary motion is one of pushing as opposed to pulling. Because the handles **90** are used for pushing, the articulation of the handle with respect to the exercise arm **12** is eliminated. However, the rotation of the handle **90** with respect to the exercise arm **12** remains to allow for some adjustment of the user's hands with respect to the exercise arm during the stroke of the exercise. **FIG. 14** shows a cross-section of the handle **90** of this embodiment, as well as the rotational connection of the axle **136** extending from the base of the handle bracket **104** with the exercise arm **12**. The handle bracket **104** is generally U-shaped. However, the legs **158** of the handle bracket are angled both to one side, with one leg being longer than the other leg in order to provide an angle of the gripping member **106** with respect to the base of the handle bracket **104**, and also with respect to the exercise arm **12**. The longer of the two legs **158** of the handle bracket **104** is on the end having the heavier and wider portion so that, when the exercise arm **12** is at rest in a relatively vertical orientation, the gripping member **106** is angled upwardly and away from the user when the user is sitting in the exercise machine. From another perspective, the gripping member **106** is angled toward the base of the handle bracket **104** from the longer leg extending from the heavy end of the base to the shorter leg extending from the opposite end of the base. In this embodiment, the hand grip portion **106** is rotatably mounted between the legs **158** of the handle bracket **104** as disclosed above.

[**0096**] Referring back to **FIG. 1**, the motion of the bar assembly **12** is discussed. During use of the exercise machine, the user actuates the arm assembly **12**, which pivots about the first pivot mechanism **92**. The force transfer link connection **32** between the arm assembly **12** and the pulley bar **30** causes the pulley bar to rotate about the second pivot mechanism **160**, which in turn causes the end pulley **84** to move in an arcuate direction stretching the belt system **28** which in turn raises the load pulley **60**. The connection of the load pulley **60** to the weight actuator bar **52** lifts the selected portion of the load **18**.

[**0097**] The exercise machine also has an adjustable seat assembly **70** connected to the support mechanism **24**. The adjustable seat assembly **70** is shown generally in **FIG. 15** and provides for adjustment of the seat bottom **162** up and down, and also may provide for adjustment of the seat back **164**. The seat bottom adjustment assembly **166** is generally known in the art. The seat back adjustment assembly **168** and the seat bottom adjustment assembly **166** are described in more detail below.

[**0098**] The exercise machine is described in more detail below with reference to various embodiments of the present invention. Like parts will be labeled with like reference numerals.

Seated Bench Press Machine

[**0099**] FIGS. **16-29** refer to a seated bench press machine **112**, in accordance with one embodiment of the present invention.

[**0100**] Specifically, **FIG. 16** shows a front perspective view thereof.

[**0101**] With respect to **FIG. 16**, the base **20** is preferably T-shaped and has a support mechanism **24** attached thereto. The support mechanism **24** includes an upwardly extending rear support **170** and a seat mechanism support **172**. The seat mechanism support **172** has an upwardly rearwardly extending member **174** and a T-shaped member **176** attached to both the base member **20** and the upwardly rearwardly extending member.

[**0102**] An adjustable seat assembly **70** is attached to the T-shaped member **176** of the seat mechanism support **172**. The seat assembly **70** provides for movement of the seat base **178** in an up and down direction and the seat back **180** in a upright and reclining direction. As shown in **FIG. 16**, the seat bottom **178** has a lower adjustment shaft **182** which

is connected to the height adjustment mechanism **184**. The height adjustment mechanism **184** is preferably a pneumatic device which is activated through a lever **186**, as known in the art. Additionally, the adjustable seat assembly **70** includes a support post **188** which extends from the seat bottom **178** through the support mechanism **172** and has a stop **190** which serves as the limit to how high the seat bottom can extend and keeps the seat from twisting appreciably. (see **FIG. 19**).

[**0103**] As shown in FIGS. **20-21**, there is also provided a seat back adjustment assembly **168** which allows for the seat back **180** to be adjusted in two positions. In the first position (as shown in **FIG. 20**), the seat back **180** reclined. As shown in **FIG. 21** in the second position, the seat back **180** is upright. The seat back adjustment assembly **168** is shown in more detail in **FIG. 21**. The seat back adjustment mechanism **168** has a first bracket **192** attached to the support mechanism **24** and a second bracket **194** attached to the back of the seat back **180**. A pair of first rectangular portions **196** are rotatably attached to the first bracket **192**. These first portions **196** have a rounded lower left corner **193** and a relatively flat butting edge **200** at the top left portion. A shaft **202** with a second pair of similarly shaped rectangular portions **204** is attached to the second bracket **194** which is in turn is attached to the back of the seat **180**. The end of the rectangular portions **204** extending away from the shaft **202** is in a corresponding shape to the end having the rounded portion **198** and butting edge **200** attached to the first bracket **192**. These two ends are rotatably connected by a third pair of rectangular members **206** with a nut and bolt assembly **208**. The shape of the first **196** and second **204** rectangular members work correspondingly such that when a seat back lever **210** is lifted, an over-center relationship is created between the rectangular portions. This over-center arrangement (shown in FIGS. **21** and in **FIG. 23**) insures that the seat back **180** will not move from one position to another during exercise. FIGS. **22-23** show additional views of the seat back adjustment mechanism **168**.

[**0104**] The arm assembly **12**, as shown in **FIG. 16**, is generally C-shaped, having a first pivot housing **88** at a first end **212** which is pivotally attached to the main base member **22** at a non-right angle **98**. The arm assembly **12** extends a short distance rearwardly away from the first pivot housing **88**, then extends a relatively longer distance upwardly and rearwardly and finally extends a relatively shorter distance upwardly and forwardly to terminate in a second end **214**. A handle assembly **90** is rotatably connected to the second end **214** of the arm assembly **12**. The arm assembly **12** is preferably connected to the T-shaped base member **26** through a pivot frame **216** having a pivot axle **94** that extends into the first pivot housing **88** of the arm assembly creating a first pivot mechanism **92**.

[**0105**] **FIGS. 17 and 45** show the first pivot mechanism **92** in which the arm assembly **12** is rotatably connected to the T-shaped base **22** and extends at an angle **98** outwardly and forwardly from the elongated portion of the base. This angular connection **98** is such that when the arm assembly **12** is actuated the handle assembly **90** moves in a converging motion.

[**0106**] The converging motion is shown in **FIGS. 17 and 18**. In **FIG. 17** the arm assemblies **12** are in the rest position and the handles **90** are approximately 23.5 inches apart. **FIG. 18** shows the arm assemblies **12** in a full extension position in which the handle assemblies **90** have converged to a distance approximately 2.5 inches apart.

[**0107**] As shown in **FIGS. 17 and 24-26**, the force transfer link **32** is connected to the arm assembly **12** and the pulley bar **30** by a first **96***a* and second **96***b* ball and socket joint, respectively. The first **96***a* and second **96***b* ball and socket joints provide for three-dimensional movement in the up/down, in/out and forward/back directions. The force transfer link **32** has a tension bar **218** with threaded ends which is connected to the first **96***a* and second **96***b* ball and socket joints with a pair of nuts **220** as shown in **FIG. 27**. The second ball and socket joint **96***b* is in turn connected to the pulley bar **30** shown in **FIG. 29**. The pulley bar 3O preferably has a second pivot housing **100**, a short lever arm **222**, a long lever arm **224** and a pulley attachment end **226**. The second ball and socket joint **966** is connected to the short lever arm **222**, which is displaced at approximately a sixty-five degree angle from the long lever arm **224**. The pulley arm **30** is rotatably connected to the base frame_through a second pivot axle **120** which is connected to the base frame thereby creating a second pivot mechanism **160**.

[**0108**] The connection of the force transfer link **32** to the short lever arm **222** acts as an "indirect drive" when the user actuates the load **18** by moving the arm assembly **12**. This indirect drive is accomplished by the user actuating the arm assembly **12**, which in turn actuates the force transfer link **32**, which in turn actuates the short lever arm **222** to pivot around the second pivot mechanism **160**, which in turn actuates the long lever arm **224** of the pulley bar **30**, which moves in an upward arcuate direction also around the second pivot mechanism. **FIG. 28** shows the position of the end pulley **84** in an upward arcuate direction when the left arm assembly **12** is approximately halfway through the exercise stroke. **FIG. 28** shows the extension of the belt **74** in the belt/pulley system **28** when the end pulley **84** has been extended away from the set-up pulley **82** by the arcuate movement of the pulley arm **30**. The movement of the end pulley **84** causes the load pulley **60** to raise an approximately equidistant amount from its rest position at the load, thereby lifting the amount of weight selected by the user an approximately equidistant amount. This is achieved through the nature of the belt loop **28** being a closed loop. If both arm assemblies **12** are actuated, the load pulley **60** preferably moves a distance approximately equidistant to the sum of the lengths that the end pulleys **84** move.

[**0109**] With respect to FIGS. **24-26** the movement of the force transfer link **32**in three dimensions is better illustrated during the use of the left arm assembly **12**. As shown at the rest position in **FIG. 24**, the force transfer link **32** extends (from the first ball and socket joint **96***a* to the second ball and socket joint **96***b*) toward the long portion of the T-shaped base **22** and the first ball and socket joint extends in an outward and upward direction away from the T-shaped base. At approximately the mid-way position of the exercise stroke as shown in **FIG. 25**, the force transfer link **32** is roughly parallel with the long axis of the T-shaped base **32** and the ball and socket joint **96***a* extends in an approximately planar direction to the top of the T-shaped base. In **FIG. 26** showing the full extension position, the force transfer link **32** now extends in a direction away from the long portion of the T-shaped base **22** and the first ball and

socket mechanism **96***a* extends outwardly and downwardly from the long axis of the T-shaped base. FIGS. **24-26** thus illustrate the ability of the force transfer link **32** to rotate and move in three dimensions. As the short lever arm **222** and end of the force transmitting link **32** move in a vertical arc aligned with the frame **22**, the other end of the force transmitting link moves in a vertical arcuate motion at an angle to the frame, out of alignment with the other end of the link. This requires the link **32** to be able to rotate and twist with respect to the connection structure at either end.

[**0110**] The belt/pulley system **28** as shown in **FIG. 29**, is similar to that described generally above except that the belt **74** extends downwardly through the front portion of the load frame **16** and through an aperture **86** in the base portion near the front of the load frame. The belt **74** preferably extends around the load pulley **60**, upwardly to two pair of directing pulleys **76***a*, **76***b*, downwardly to two transverse stack frame pulleys **78***a*, **78***b*, outwardly to a pair of transition pulleys **80***a*, **80***b*, rearwardly past a pair of tensioning pulleys **228***a*, **228***b* to a pair of set-up pulleys **82***a*, **82***b* and upwardly to a pair of end pulleys **84***a*, **84***b*. The belt **74** is finally fixed to the support mechanism **24** by being pinched and secured between a pair of metal plates **230** attached thereto by four screws **232**.

[**0111**] Between the directing pulleys **76***a*, **76***b* and the transverse stack frame pulleys **78***a*, **78***b*, the belt **74** is rotated approximately ninety degrees. The belt **74** is rotated or twisted another ninety degrees between the pair of tensioning pulleys **228***s*, **228***b* and the set-up pulleys **82***a*, **82***b*.

[**0112**] The effective length of the arm assembly **12**, measured from the center of the first pivot housing **88** to the terminal end of the arm assembly, is approximately 37 inches. The distance from the first pivot mechanism **92** to the first ball and socket joint **96***a* is approximately 4 inches. The distance from the first ball and socket joint **96***a* to the second ball and socket joint **96***b* is approximately 20 inches. The distance from the second ball and socket joint **96***b* to the first lever arm **222** is approximately **4** inches. The distance from the first lever arm **262** to the end pulley **84** is approximately 13 inches. These general dimensions have been found to provide favorable motion and force transmission.

Seated Row Machine

[**0113**] FIGS. **30-34** show a seated row machine **234**, in accordance with an embodiment of the present invention.

[**0114**] Specifically, **FIG. 30** shows a front perspective view of the seated row machine **234**, while **FIG. 43** is an exploded view of the seated row machine. Referring now to **FIG. 30**, the base member **30** and support mechanism **24** for the seated row machine **234** are slightly different from other machines due the to the nature of the exercise. The support mechanism **24** includes an upwardly extending front support **236** and a longitudinal seat support **238** that is connected to the base member **20** by two upwardly extending rear supports **240**. The upwardly extending front support **236** is located at the front of the base member **20** and the longitudinally extending rear support **238** is attached near the rear of the base member. The rear support **238** is designed to support a chest pad assembly **242** and a seat assembly **70**.

[**0115**] The seat assembly **70** includes the adjustable seat bottom assembly **166** as discussed above for the seated bench press machine **112**. The chest pad assembly **242** includes a chest pad **244**, a chest pad support bar **246**, a sliding assembly **248** and a latch assembly **250**. The chest pad assembly **242** is movably connected to the rear support **238** through the sliding assembly **248** as shown generally in **FIG. 33**.

[**0116**] Referring back to **FIGS. 30 and 43**, the chest pad assembly **242** has a chest pad **244** attached to a chest pad support bar **246**, which is in turn connected to a sliding assembly **248** allowing for movement of the chest assembly **242** in a longitudinal direction within the rear support **238**. The sliding assembly **248** includes a pair of support rails **252** located inside the rear support **238** that extend longitudinally. A pair of concentric sliding rails **254** with a diameter greater than the support rails **252** extend over the support rails and are connected to the chest pad support bar **246** such that the chest pad support bar may slide up and down the length of the support rails for adjustment by the user. The support rails **252** and sliding rails **254** are shown in more detail in **FIG. 34**.

[**0117**] The rear support **238** has a slot **256** located on its top surface in which the chest pad support bar **246** extends. The slot **256** generally encloses the sliding assembly **248** within the rear support **238** and limits the distance the chest pad assembly **242** can travel both forward and backward along the rear support. The chest pad assembly **242** is adjustable along the length of the slot **256** by use of a latch assembly **250**. The latch assembly **250** mechanism is shown in more detail in FIGS. **35-38**, is generally known in the art.

[**0118**] The arm assembly **12** for the seated row machine **234** is shown in **FIG. 30**. Again, the arm assembly **12** is generally C-shaped. The arm assembly **12** has a first pivot housing **88** located at a first end **212** and extends in a direction approximately parallel to the base structure **20** for a relatively short length. The arm assembly **12** then extends for a relatively longer length in a relatively upward and outward direction toward the front of the base structure **20**. The arm assembly **12** then extends for a relatively shorter length rearwardly and terminates at a second end portion **214**. The handle assembly **90** is rotatably attached to the second end portion **214** of the arm assembly **12**. The arm assembly **12** is rotatably connected through a first pivot mechanism **92** which includes the first pivot housing **88** of the arm assembly and a first pivot axle **94** attached to the base member **20**. A second pivot axel **120** is attached opposite to the first pivot axel **94** and rotatably attached to a pulley bar **30**. The pulley bar **30** has a second pivot housing **100** and a pulley attachment end **226**. The pulley bar **30** is connected to the second pivot axle **120** through the second pivot housing **100**, thereby creating a second pivot mechanism **160**.

[**0119**] As shown in FIGS. **39-41**, the arm assembly **12** is operably connected to the pulley arm **30** through a force transfer link **32**. The force transfer link **32** has a first ball and socket joint **96***a* connected to a point on the arm assembly **12** offset a relatively short distance from the first pivot housing **88**. A second ball and socket joint **96***b* on the force transfer link **32** is connected to the pulley arm **30** at a point approximately halfway between the second pivot housing **150** and the end of the pulley bar **30**. The end of the pulley bar **30** has a tab bracket **258** which connects to an end pulley **84**. The end pulley **84** is operably connected to the belt **74** and, accordingly, with the rest of the belt/pulley system **28**.

[0120] **FIG. 42** shows the first pivot mechanism **92**, in which the arm assembly **12** is rotatably connected to the base member **20** through the first pivot mechanism and extends at an angle **98** outwardly and rearwardly from the base member. This angular connection **98** is such that when the arm assembly **12** is actuated, the handle assembly **90** (not shown) moves in a diverging direction.

[0121] The diverging motion of the seated row machine **234** is shown in **FIGS. 31 and 32**. In **FIG. 31**, the arm assemblies **12** are in the rest position and the handles **90** are approximately 10.5 inches apart. **FIG. 32** shows the arm assemblies **12** in a full extension position, with the handle assemblies **90** diverged approximately 27 inches.

[0122] FIGS. **39-40** show the arm assemblies **12** in a rest position and a full extension position, respectively. As shown in **FIG. 40**, the force transfer link **32** is connected at one end to the arm assembly **12** and at the opposite end to the pulley bar **30**. The first **96***a* and second **96***b* ball and socket joints at the end of the force transfer link **32** provide for three-dimensional motion in the up/down, in/out, and forward/back directions as described above in detail with respect to the seated bench press machine **112**. The first ball and socket joint **96***a* is connected to the arm assembly **12** at a point offset from the first housing **88** through a connection flange **258** attached to the arm assembly. The force transfer link **32** has a tension bar **218** which is connected to the first ball and socket joint **96***a* and attached to the second ball and socket joint **96***b*. The second ball and socket joint **96***b* is in turn connected to the pulley bar **30**.

[0123] The connection of the force transfer link **32** to the pulley bar **30** acts as a "direct drive" when the user actuates the load **18** by moving the arm assembly **12**. Thus, when the user activates the arm assembly **12**, the force transfer link **32** directly pivots the pulley bar **30** about the second pivot mechanism **160** and thereby moves in an upward arcuate direction. **FIG. 40** shows the arm assemblies **12** in full extended position in which the force transfer link **32**, and consequently the end pulleys **84***a*, **84***b* are both rotated in the upward arcuate direction.

[0124] The belt/pulley system **28** is similar to that described generally above. Referring back to **FIG. 43**, the belt **74** preferably extends around the load pulley **60**, upwardly to two pair of directing pulleys **76***a*, **76***b*, downwardly to two transverse stack frame pulleys **78***a*, **78***b*, outwardly to a pair of transition pulleys **80***a*, **80***b*, inwardly to a pair of tensioning pulleys **228***a*, **228***b* forwardly to a pair of set-up pulleys **82***a*, **82***b* and upwardly to a pair of end pulleys **84***a*, **84***b*. The belt **74** is finally fixed to the support mechanism **24** by being pinched and secured between a pair of metal plates **230** attached thereto by four screws **232**.

[0125] Between the directing pulleys **76***a*, **76***b* and the transverse stack frame pulleys **78***a*, **78***b* the belt is rotated approximately ninety degrees. The belt is rotated or twisted another ninety degrees between the pair of transition pulleys **80***a*, **80***b* and the set-up pulleys **82***a*, **82***b*.

[0126] During use, the arm assembly **12** is actuated by pulling the handle assemblies **90** back towards the user. The arm assembly **12** pivots about the first pivot mechanism **92**. The force transfer link **32** connected between the arm assembly **12** and the pulley bar **30**, causes the pulley bar to rotate about the second pivot mechanism **160**. Thus, rotation about the second pivot mechanism **160** causes the end pulley **84** to rotate in an upwardly arcuate direction from a rest position (as is shown in **FIG. 39**) to a full extension position (as is shown in **FIG. 40**).

[0127] **FIG. 41** shows a side view of the arm assemblies **12** in full extension position, and also shows the extension of the end pulleys **84***a*. **84***b*. This extension of the end pulleys **84***a*, **84***b* stretches the belt system **28** which in turn raises the load pulley **60**, which in turn lifts the selected amount of weight plates **46** in the load stack **18**.

[0128] The effective length of the arm assembly **12** measured from the center of the first pivot housing **88** to the terminal end of the arm assembly is approximately **36** inches. The distance from the first pivot mechanism **92** to the first ball and socket joint **96***a* is approximately 7 inches. The distance from the first ball and socket joint **96***a* to the second ball and socket joint **96***b* is approximately 7 inches. The distance from the second ball and socket joint **96***b* to the second pivot mechanism **160** is approximately 6 inches. The distance from the second pivot mechanism **160** to the end pulley **84** (the length of the pulley arm) is approximately 13.5 inches. These general dimensions have been found to provide favorable motion and force transmission.

[0129] FIGS. **44-53** show a seated shoulder press machine **260**, in accordance with an embodiment of the present invention.

Seated Shoulder Press Machine

[0130] Specifically, **FIG. 44** shows a front perspective view while **FIG. 53** is an exploded view of the seated shoulder press machine **260**. The base member **20** is preferably T-shaped and has a support member **24** for attaching the seat assembly **70**, the arm assemblies **12** and the belt/pulley system **28**. The support member **24** has a seat support assembly **172** similar to the seat support assembly described in detail for the seated bench press embodiment **112** above. The support mechanism **24** has a rear support member **170** extending upwardly perpendicular to the base member **20** and has an upwardly and rearwardly extending top portion **262**.

[0131] An adjustable seat assembly **70** is again provided which allows for movement of the seat base **178** in an up/down direction, and the seat back **180** in an upright/recline direction as described in detail with respect to the seated bench press machine **112** above.

[0132] As shown in **FIGS. 45 and 46**, the arm assembly **12** is generally S-shaped, and has a first pivot housing **88** at a first end **212**. The arm assembly **12** has a counterweight mechanism **264** attached to the end of the first pivot housing **88** extending in a substantially opposite direction away from the arm assembly. The arm assembly **12** has a first straight section **266** extending from the first pivot housing **88** toward the front of the base member **20** of a length approximately one-half the effective length of the arm assembly. A second generally rounded L-shaped portion **268** is connected to the first portion **266** of the arm assembly **12**. The second portion **268** terminates in a relatively downwardly facing vertical end **214**. The handle assembly **90** is rotatably connected to the relatively vertical end of the arm assembly **12**.

[0133] The arm assembly **12** is connected to a rearwardly-extending vertical support member **262** through a first pivot mechanism **92**. The first pivot mechanism **92** includes the first pivot housing **88** and a first pivot axle **94** which is connected to the vertical support member **262**.

[0134] **FIG. 47** shows the first pivot mechanism **92** in which the arm assembly **12** is rotatably connected to the vertical support member **92** and extends at an angle **98** forwardly and outwardly from the vertical support. This

angular connection **98** is such that when the arm assembly **12** is actuated from the rest position to the full extension position, the handle assembly **90** moves in a converging motion as shown in **FIGS. 45 and 46**.

[**0135**] In **FIG. 45**, the arm assemblies **12** are in the rest position and the handles are approximately 23 inches apart. **FIG. 46** shows the arm assemblies **12** in a full extension position, in which the handle assemblies **90** have converged to a distance approximately 6.5 inches apart.

[**0136**] **FIG. 48** shows the force transfer link **32** which connects the left arm assembly **12** and the pulley bar **30**. Again, the force transfer link **32** has a first ball and socket joint **96***a* connected to the arm assembly **12**. The connection to the arm assembly **12** is preferably located along the first portion of the arm assembly. A Z-shaped bracket **270** is connected to the first portion of the arm assembly **12** to facilitate attachment of the force transfer link **32**. As shown in **FIGS. 49 and 50**, the second ball and socket joint **96***b* is connected to the pulley bar **30**. The pulley bar **30** preferably has a second pivot housing **100** and a pulley attachment end **212**. The second ball and socket joint **96***b* is connected by a bracket **270** to the pulley bar **30** at a distance that is closer to the pulley attachment end **226**. The pulley arm **30** is rotatably connected to the vertical support **262** through a second pivot axle **120**, thereby creating a second pivot mechanism **160**. The second pivot mechanism **160** is roughly opposite the first pivot mechanism **92**.

[**0137**] The connection of the force transfer link **32** directly to the pulley arm **30** again acts as a direct drive when the user actuates the load by moving the arm assembly **12**. This direct drive is accomplished by the user actuating the arm assembly **12** which in turn actuates the force transfer link **30**, and **50** directly actuating the pulley bar **30**. The pulley bar **30** thus moves in an upward arcuate direction. **FIG. 49** shows the end pulley **84** in an upward arcuate position when the left arm assembly **12** is in full extension position. **FIG. 50** shows the arm assemblies **12** and pulley bars **30** in a rest position, where the first portion of the arm assembly is roughly parallel to the pulley bar.

[**0138**] **FIG. 51** shows a pulley arm stop bar **272**, which limits the motion of the arm assembly **12** should the user pull down on the arm assemblies (as opposed to the intended movement of pushing up). This pulley bar stop mechanism **272** is a rectangular bar pivotally connected at a center point of the top portion of the vertical support member **262**. A rubber stopper **274** is preferably present on each end which is adapted to cushion the pulley bar **30**. This pulley bar stop mechanism **272** prevents wear and tear on the exercise machine. In addition, an additional stopper **276** is connected directly to the outside of the vertical support bar **262**, thereby providing an additional stop for the end of the pulley stop mechanism **272** so that the pulley stop mechanism does not rub on the vertical support member.

[**0139**] The belt/pulley system **28** is again similar to that described generally above. Preferably, the belt **74** extends around the load pulley **60**, upwardly to two pair of directing pulleys **76***a*, **76***b*, downwardly to two transverse stack frame pulleys **78***a*, **78***b*, outwardly to a pair of transition pulleys **80***a*, **80***b*, upwardly past two tensioning pulleys **228***a*, **228***b* to a pair of set-up pulleys **826***a*, **826***b* and upwardly and forwardly to a pair of end pulleys **84***a*, **84***b*.

[**0140**] Between the directing pulleys **76***a*, **76***b* and the transverse stack frame pulleys **78***a*, **78***b*, the belt **74** is rotated approximately ninety degrees. The belt is rotated or twisted another ninety degrees between the pair of transition pulleys **80***a*, **80***b* and the set-up pulleys **82***a*, **82***b*.

[**0141**] As shown in **FIG. 52**, the ends of the belt **74** are rigidly attached to the vertical support member **262** by being pinched between a pair of metal plates **230** attached thereto by four screws **232**. In this embodiment, the belt/pulley system **28** extends through an aperture **86** in the rearwardly and vertically sloping portion of the rear support **262**.

[**0142**] During use, the arm assembly **12** is actuated by pushing the handle assemblies **90** up and away from the user causing the arm assembly to pivot about the first pivot mechanism **92**. The force transfer link **32** connected between the arm assembly **12** and the pulley bar **30** causes the pulley bar to rotate about the second pivot mechanism **160**. The rotation about the second pivot mechanism **160** causes the end pulley **84** to rotate in an upwardly arcuate direction from a rest position (shown in **FIG. 50**) to a full extension position (shown in **FIG. 49**) which in turn causes the extension of the end pulleys. This extension of the end pulleys **84** stretches the belt system **28**, which in turn raises the load pulley **60**, which in turn lifts the selected amount of weight plates **46** in the load stack **18**.

[**0143**] The effective length of the arm assembly **121** measured from the center of the first pivot housing **88** to the terminal end of the arm assembly, is approximately **39** inches. The distance from the first pivot mechanism **92** to the first ball and socket joint **96***a* is approximately 10.5 inches. The distance from the first ball and socket joint **96***a* to the second ball and socket joint **96***b* is approximately 5 inches. The distance from the second ball and socket joint **96***b* to the second pivot mechanism **160** is approximately 10 inches. The distance from the second pivot mechanism **160** to the end pulley **84** is approximately 14.5 inches. These general dimensions have been found to provide favorable motion and force transmission.

Seated Pull-Down Machine

[**0144**] FIGS. **1-7** show a seated pull down machine, in accordance with an embodiment of the present invention. Specifically, **FIG. 1** shows a front perspective view while **FIG. 7** is an exploded view of the pull down machine. As shown in **FIG. 1**, the base member **20** is preferably T-shaped and has a support member **24** for attaching the seat assembly **70**, the arm assemblies **12** and the belt/pulley system **28**. The support member **24** has a seat support assembly **172** similar to the seat support assembly described in detail for the seated bench press embodiment **112** above.

[**0145**] The support member **24** also has an upwardly extending rear support member **170** perpendicular to the base member **20** and an upwardly and rearwardly extending portion **174** and a forwardly extending portion **278** at the top of the rear support member.

[**0146**] An adjustable seat assembly **70** is again provided which provides for movement of the seat base **178** in an up/down direction and the seat back **164** in an upright/recline direction as described in detail with respect to the seated bench press machine **112** above. In addition, a seat belt assembly **280** is provided to secure the user to the seat assembly **70** during use. The seat belt assembly **280** is attached to the seat support member **174** and is generally known in the art.

[**0147**] As shown in **FIG. 1**, the arm assembly **12** has a first portion **266** having a first pivot housing **88** at one end and a generally rounded L-shaped portion **268** attached to the

first portion. The L-shaped portion **268** extends from the first portion **266** in an outward and upward direction and terminates in a relatively horizontal end. A handle assembly **90** is rotatably connected to the relatively horizontal end **266** of the arm assembly **12**. Again, a counterweight **264** is attached proximate the first pivot housing **88** extending in an opposite direction from the first portion **266** of the arm assembly **12**. The first pivot housing **88** is connected to the vertical support member **262** through a first pivot axle **94** thereby defining a first pivot mechanism **92**.

[**0148**] **FIG. 5** shows the first pivot mechanism **92** in which the arm assembly **12** is rotatably connected to the vertical support member **262** and extends upwardly and inwardly from the vertical support member. This angular connection **98** is such that when the arm assembly **12** is actuated the handle assembly **90** moves in a diverging motion.

[**0149**] The diverging motion associated with this machine **10** is shown in **FIGS. 2 and 3**. In **FIG. 2**, the arm assemblies **12** are in the rest position and the handles **90** are approximately 6.5 inches apart. **FIG. 3** shows the arm assemblies **12** in a full extension position in which the handle assemblies **90** have diverged to a distance approximately 20.5 inches apart.

[**0150**] Referring back to **FIG. 1**, the force transfer link **32** is connected to the arm assembly **12** at a Z-shaped bracket **270** which is connected to the first portion **262** of the arm assembly. The force transfer link **32** is additionally connected to the pulley arm **30** at a point approximately equidistant between the second pivot housing **100** and the pulley attachment end **226**. The force transfer link **32** has a tension bar **218** and a first **96***a* and a second **96***b* ball and socket joint at each end. The first ball and socket joint **96***a* is rotatably connected to the arm assembly **12** at the Z-shaped bracket **270** and the second ball and socket joint **96***b* is connected to the pulley arm **30**. Again, the force transfer link **32** provides for rotation in three dimensions. The pulley arm **30** is rotatably connected to a second pivot axle **120** located opposite the first pivot axle **94** of the first pivot mechanism **92** and extends through the second pivot housing **100** thereby creating a second pivot mechanism **160**.

[**0151**] The connection of the force transfer link **32** directly to the pulley arm **30** acts as a "direct drive" when the user actuates the load **18** by moving the arm assembly **12**. This direct drive is accomplished by the user actuating the arm assembly **12**, which in turn actuates the force transfer link **32**, which in turn actuates the pulley bar **30** which moves in a downward arcuate direction.

[**0152**] **FIG. 4** shows the left arm assembly **12** in a full extension position in which the end pulley **84** and the force transfer link **32** have rotated in the downward arcuate direction. **FIG. 4** also shows the belt/pulley system **28** where the end pulley **84** has been extended away from its rest position, which in turn causes the load pulley **60** to raise an approximately equidistant amount from its rest position at the load **18**, thereby lifting the amount of weight selected by the user an approximately equidistant amount. Again, this is achieved through the nature of the belt system **28** being a closed loop. **FIG. 6** shows the end connections closing the belt system **28** by attaching the belt to the vertical support member **170**.

[**0153**] FIGS. **1-3** also shows the counterweights **264** attached to the arm assemblies **12**. These counterweights **264** are present to smooth out the motion of the arm assemblies **12** during use.

[**0154**] The belt/pulley system **28** is again similar to that described generally above. Preferably, the belt **74** extends around the load pulley **60**, upwardly to two pair of directing pulleys **76***a*, **76***b*, downwardly to two transverse stack frame pulleys **78***a*, **78***b*, outwardly to a pair of transition pulleys **80***a*, **80***b*, upwardly past two tensioning pulleys **228***a*, **228***b* to a first pair of set-up pulleys **82***a*, **82***b*, outwardly to a second pair of set-up pulleys **282***a*, **282***b* and downwardly to a pair of end pulleys **84***a*, **84***b*.

[**0155**] Between the directing pulleys **76***a*, **76***b* and the transverse stack frame pulleys **78***a*, **78***b* the belt **74** is rotated approximately ninety degrees. The belt **74** is rotated or twisted another ninety degrees between the pair of transition pulleys **80***a*, **80***b* and the set-up pulleys **282***a*, **282***b*.

[**0156**] Again, the belt pulley system **28** extends through an aperture **86** in the upward and rearwardly extending support member **284** and the belt ends are attached to the upright support member **278** by being pinched between two metal plates **230** attached thereto by four screws **232**.

[**0157**] During use, the arm assembly **12** is actuated by pulling the handle assemblies **90** down toward the user causing the arm assembly to pivot about the first pivot mechanism **92**. The force transfer link **32** connected between the arm assembly **12** and the pulley bar **30** causes the pulley bar to rotate about the second pivot mechanism **160**. The rotation about the second pivot mechanism **160** causes the end pulley **84** to rotate in a downwardly arcuate direction from a rest position (shown in **FIG. 16**) to a full extension position (shown in **FIG. 4**) which causes the extension of the end pulleys. This extension of the end pulleys **84** stretches the belt system **28**, which in turn raises the load pulley **60**, which in turn lifts the selected amount of weight plates **46** in the load stack **18**.

[**0158**] The effective length of the arm assembly **12**, measured from the center of the first pivot housing **88** to the terminal end of the arm assembly, is approximately 42 inches. The distance from the first pivot mechanism **92** to the first ball and socket joint **96***a* is approximately 10.5 inches. The distance from the first ball and socket joint **96***a* to the second ball and socket joint **96***b* is approximately 5.5 inches. The distance from the second ball and socket joint **96***b* to the second pivot mechanism is approximately 10½ inches. The distance from the second pivot mechanism **160** to the end pulley **60** (i.e., the length of the pulley bar **30**) is approximately 18.5 inches. These general dimensions have been found to provide favorable motion and force transmission.

[**0159**] While the invention has been particularly shown and described with reference to various embodiments, those skilled in the art will realize upon reading the foregoing description various changes in structure, form, or detail which may be made without departing from the spirit of the invention. Accordingly, the preceding description is meant by way of illustration and not limitation. The scope of the invention is set forth in the accompanying claims.

Reference	Part Number	Description	Quantity
		NATURAL STRENGTH PUSH	
1	3020S082	TOP COVER SCHWINN 735X190X90 MM	1
2	6010S002	REAR COVER	1

-continued

Reference	Part Number	Description	Quantity
3	6010S001	FRONT COVER	1
4	20100220	LEFT FRAME BRACKET	1
5	3020S363	CHROMED GUIDE POST D30X1500 MM	2
6	60200008	PAINTED BRACKET 100 KG	1
7	6020501N	FIRST WEIGHT PLATE 390X90X20	1
8	6020502N	SECOND WEIGHT PLATE 390X90X20	19
9	20200008	SELECTOR PIN SCHWINN	1
10	6020005N	SPRING 32X44X6X1 10	1
11	2050S002	UPHOLSTERED BACK SCHWINN	1
12	20100325	BACK PLATE	1
13	20100351	ARTICULATED BRACKET	1
14	7020S002	GUIDE	2
15	2050S003	UPHOLSTERED SEAT SCHWINN	1
16	10700007	SEAT ADJUSTING PLATE	1
17	10700006	SEAT PISTON	1
18	30200003	SEAT GUIDE SHAFT 242 MM	1
19	20100296	FRAME	1
20	10714435	RING 471 E-15	6
21	20100308	RIGHT CONNECTING ARM	1
22	20100342	HINGE BRACKET	2
23	3020S137	BACK HANDLE GRIP SCHWINN	1
24	20100349	LEFT CONNECTING ARM	1
25	10800012	BEARING 6206 ZZ	4
26	5020S015	CHROME BEARING COVER	2
27	5020S012	CHROME BEARING SPACER	2
28	20100362	RIGHT PROTECTIVE COVER	1
29	3020S097	HINGE SHAFT	3
30	20100286	PIVOT BRACKET	1
31	3020S302	BUSHING DI8XD10 25X68	1
32	20100350	REAR SHOULDER SUPPORT	1
33	50400016	CHROME COVER 120X60X2	1
34	3020S111	PULLEY SCHWINN	2
35	20100294	HANDLE	1
36	60200006	BLACK BRACKET)	1
37	30400003	BUSHING 5 MM	40
38	20100363	LEFT COVER PROTECTOR	1
39	T799116X30	GALVANIZED SCREW 7991 16X30	4
40	50200100	WASHER 25X8X7	1
41	10714022	MALE STOP SCREW 212/15 30X15 MS	2
42	3020S159	TIE STRAP	1
43	3020S019	BUSHING D18XD10 25X138	1
44	20100359	RIGHT ARM	1
45	20100360	LEFT ARM	1
46	5020S003	CHROME BRACKET	2
47	10700026	RUBBER GRIP	3
48	10800025	BEARING 6202 ZZ	4
49	30205081	ANGLED UNIVERSAL JOINT	4
50	10200003	NYLON PULLEY	8
51	3020S074	BUSHING DI8XD10 25X38	1
52	30208115	ARM 617 MM CROM D15	2
53	10700005	BELT PU P-2 15 MM	8500 ML
54	PP10X60	PIN 10X60	2
55	7020S003	HANDLE	2
56	10709009	NUMBERING STRIP 5-100 KG	1
57	10700031	LOGOTYPE ROUND 19CM SCH	1
58	30400027	BLACK COVER M10	2
59	10800003	BEARING 6200 ZZ	30
60	10800022	BEARING 6000 ZZ	4
70	T91210X100	GALVANIZED SCREW 912 10X100	6

-continued

Reference	Part Number	Description	Quantity
71	T91210X65	GALVANIZED SCREW 912 10X65	6
72	T799110X50	SCREW 7991 10X50 ZN M/C	3
73	T91210X60	GALVANIZED SCREW 912 10X60	1
74	TF10	GALVANIZED NUT 985 M10	16
75	T799110X100	SCREW 7991 1OX100 ZN M/C	7
76	T799110X16	SCREW 7991 1OX16 ZN M/C	8
77	T91210X25	GALVANIZED SCREW 912 10X25	2
78	T91212X25	GALVANIZED SCREW 912 12X25	5
79	AP12	GALVANIZED WASHER 12	8
80	T91212X20	GALVANIZED SCREW 912 12X20	5
81	T91212X80	GALVANIZED SCREW 912 12X80	5
82	T9128X20	GALVANIZED SCREW 912 8X20	5
83	AG8	GALVANIZED WASHER GROOVED M8	4
84	T91210X16	GALVANIZED SCREW 912 10X16	4
85	AG10	GALVANIZED WASHER MI0	4
86	T799110x20	SCREW 7991 10x20 ZN M/C	8
87	T9128X80	GALVANIZED SCREW 912 8X80	5
88	T91210X50	GALVANIZED SCREW 912 10X50	5
89	T514	GALVANIZED NUT 985 MI4	8
90	T9128X20	GALVANIZED SCREW 912 8x20	1
91	A90218	GALVANIZED WASHER 9021 D8	4
92	T79916x30	SCREW 799 16X30 ZN M/C	8
93	AP6	GALVANIZED WASHER 6	8
94	T79910X45	SCREW 7991 10X45 ZN M/C	8
95	T9126X16	GALVANIZED SCREW 912 6X16	4
96		BEARING COVER	4
97	T79916X16	SCREW 7991 6X16 ZN M/C	8
98	AP8	GALVANIZED WASHER 8	3
		NATURAL STRENGTH PULL DOWN	
1	3020S082	COVER SCHWINN 735X190X90 MM	1
2	6010S002	REARCOVER	1
3	6010S001	FRONT COVER	1
4	20100212	RIGHT FRAME BRACKET	1
5	3020S363	CHROME GUIDE POST D30X1500 MM	2
6	60200008	PAINTED BRACKET 100 KG	1
7	6020504N	FIRST WEIGHT PLATE 390X90X20	1
8	6020503N	SECOND WEIGHT PLATE 390X90X20	19
9	20200008	SELECTOR PIN SCHWINN	1
10	6020005N	SPRING 32X44X6X110	1
11	2050S002	UPHOLSTERED BACK SCHWINN	1
12	20100353	RIGHT ARM	1
13	20100354	LEFT ARM	1
14	7020S002	GUIDE	2
15	2050S001	UPHOLSTERED SEAT SCHWINN	1
16	10700007	SEAT ADJUSTING PLATE	1
17	10700006	SEAT PISTON	1
18	30200003	SEAT GUIDE SHAFT 242 MM	1
19	20100293	FRAME	1
20	9020S001	COUNTER WEIGHT	2
21	20100308	RIGHT CONNECTING ARM	1
22	5020S007	CHROME STRAIGHT	2
23	70208001	UNIVERSAL JOINT	2
24	20100349	LEFT CONNECTING ARM	1

-continued

Reference	Part Number	Description	Quantity
25	10800012	BEARING 6206 ZZ	8
26	5020S015	CHROME BEARING COVER	4
27	5020S012	CHROME BEARING SPACER	4
28	7020S013	UNIVERSAL SHAFT	2
29	10700026	RUBBER GRIP	2
30	20100288	PIVOT BRACKET	1
31	3020S302	BUSHING D1 8XD1O 25X68	3
32	7020S003	HANDLE	2
33	7020S017	COUNTERWEIGHT WASHER	2
34	10700019	LAP BELT 25210	1
35	20100294	SUPPORT	1
36	60200006	BLACK PAINTED BRACKET	1
37	30400003	BUSHING SPACER 5 MM	40
38	10800022	BEARING 6000 ZZ	4
39	T799116X30	GALVANIZED SCREW 7991 16X30	4
40	50200100	WASHER 25X8X7	1
41	10714022	MALE STOP SCREW 212/15 30X15 M8	2
42	3020S159	CHROME FASTENER	2
43	10709009	NUMBERING STRIP 5–100 KG	1
44	10700031	ROUND LOGOTYPE 19 CM SCHWINN	3
45	30400027	BLACK CAP M10	6
46	10700005	BELT PU P-2 15 MM	11500 ML
47	10800003	BEARING 6200 ZZ	30
48	3020S309	BRACKET	2
49	50205014	CHROME BEARING COVER	2
50	10200003	NYLON PULLEY	15
51	10800025	BELT 6202 ZZ	4
52	PP10X60	PIN 10X60	2
53	PP6X30	PIN 6X30	2
54	1070S001	THREADED ARM 14/1.50	0490
55	3020S300	BUSHING D18XDIO 25X4	1
56	50400016	CHROME COVER 120X60X2	1
57	60200003	SUPPORT COVER	1
58	3020S081	ANGLED UNIVERSAL	4
70	T91210X100	GALVANIZED SCREW 912 10X100	6
71	T91210X65	GALVANIZED SCREW 912 10X65	6
72	T799110X50	SCREW 7991 10X50 ZN MJC	3
73	T91210X60	GALVANIZED SCREW 912 10X60	1
74	TE10	GALVANIZED NUT 985 M10	16
75	T799110X100	SCREW 7991 10X100 ZN MJC	7
76	T199110X16	SCREW 7991 10X16 ZN M/C	8
77	T91210X25	GALVANIZED SCREW 912 10X25	2
78	T91212X25	GALVANIZED SCREW 912 12X25	5
79	AP12	GALVANIZED WASHER 12	8
80	T91212X20	GALVANIZED SCREW 912 12x20	5
81	T91212X80	GALVANIZED SCREW 912 12X80	5
82	T9128x20	GALVANIZED SCREW 912 8X20	5
83	AG8	GALVANIZED WASHER M8	4
84	T91210X16	GALVANIZED SCREW 912 10X16	4
85	AG10	GALVANIZED WASHER M10	4
86	T799110X20	SCREW 7991 10X20 ZN M/C	8
87	T9128X80	GALVANIZED SCREW 912 8X80	5
88	T91210X50	GALVANIZED SCREW 912 10X50	5
89	T514	GALVANIZED NUT 985 M14	8
90	T9128X20	GALVANIZED SCREW 912 8X20	1
91	A90218	GALVANIZED WASHER 9021 DS	4

-continued

Reference	Part Number	Description	Quantity
92	T79916X30	SCREW 7991 6X30 ZN MJC	8
93	AP6	GALVANIZED WASHER 6	8
94	T79910X45	SCREW 7991 10X45 ZN M/C	8
95	T79910X120	SCREW 7991 10X120 ZN M/C	8
96	T79916X20	SCREW 79916X20 ZN MIC	4
97	AET10,5	WASHER AET M10,5	6
98	AP8	GALVANIZED WASHER 8	8
99	PP6XI20	PIN	2
		NATURAL STRENGTH PUSH UP	
1	3020S082	COVER SCHWINN 735X190X90 MM	1
1	6010 S002	PAINTED REAR COVER	1
3	6010 SOO1	PAINTED FRONT COVER	1
4	20100212	RIGHT FRAME BRACKET	1
5	3020S363	CHROME GUIDE POST D30X1500 MM	2
6	60200008	PAINTED BRACKET 75 KG	1
7	6020503N	PLATE 1" HS 04 2,5 K.G	1
8	6020003N	SECOND WEIGHT PLATE390X90X20	11
9	20200008	SELECTOR PIN SCHWINN	1
10	6020005N	SPRING 32X44X6X110	1
11	20508002	UPHOLSTERED BACK SCHWINN	1
12	20100355	RIGHT SHOULDER ARM	1
13	20100356	LEFT SHOULDER ARM	1
14	7020S002	GUIDE	2
15	2050S001	UPHOLSTERED SEAT SCHWINN	1
16	10700007	SEAT ADJUSTING PLATE	1
17	10700006	SEAT PISTON	1
18	30200003	SEAT GUIDE SHAFT 242 MM	1
19	20100292	SHOULDER FRAME	1
20	9020S001	COUNTERWEIGHT	2
21	5020S006	RIGHT SHOULDER CONNECTING ARM	1
22	5020S003	ASYMMETRIC CHROME BRACKET	2
23	20100325	SHOULDER BACK	2
24	50208020	LEFT SHOULDER CONNECTING ARM	1
25	10800012	BEARING 6206ZZ	8
26	5020S015	CHROME BEARING COVER	4
27	50208012	CHROME BEARING SPACER	4
28	50400016	COVER	1
29	10700026	RUBBER GRIP	2
30	20100288	PIVOT BRACKET	1
31	3020S302	BUSHING D18XDI0 25X68	3
32	7020S003	HANDLE	2
33	70208017	COUNTERWEIGHT WASHER	2
34	6020504N	PLATE 2ª HS 04 2,5 K.G	1
35	20100294	SUPPORT	1
36	60200006	BLACK PAINTED BRACKET	1
37	30400003	BUSHING SPACER 5 MM	40
38	10800022	BEARING 6000 ZZ	
39	T199116X30	GALVANIZED SCREW 7991 16X30	4
40	50200100	SHAFT WASHER 25X8X7	1
41	10714022	MALE STOP SCREW 212/15 30X15 M8	2
42	3020S159	CHROME FASTENER	2
43	10709009	NUMBERING STRIP 5–100 KG	1
44	10700031	ROUND LOGOTYPE 19 CM SCHWINN	3
45	30400027	BLACK CAP M10	6
46	10700005	BELT PU P-2 15 MM	11500 ML
47	10800003	BEARING 6200 ZZ	30
48	10714435	SEGER RING 471 E-IS	6
49	5020S014	CHROME BEARING COVER	2
50	10200003	NYLON PULLEY	15
51	10800025	BEARING 6202 ZZ	4

-continued

Reference	Part Number	Description	Quantity
52	PPI0X60	PIN 10X60	2
53	PP6X30	PIN 6X30	2
54	10705001	THREADED ARM 14/1.50	0.190
55	3020S300	BUSHING DI8XDI0 25X4	1
56	3020S097	HINGE SHAFT	3
57	20100342	HINGE HOOK	2
58	20100351	FRONT SHOULDER REST	1
59	20100350	REAR SHOULDER REST	1
60	3020S137	BACKREST GRIP SCHWINN	1
61	20100338	SHOULDER COUNTER-WEIGHT	1
62	3020S081	ANGLED UNIVERSAL JOINT	4
70	T91210X100	GALVANIZED SCREW 912 10X100	6
71	T91210X65	GALVANIZED SCREW 912 10X65	6
72	T799110X50	SCREW 7991 10X50 ZN M/C	3
73	T91210X60	GALVANIZED SCREW 912 10X60	1
74	TF10	GALVANIZED NUT 985 M10	16
75	T799110X100	SCREW 7991 10X100 ZN M/C	7
76	T799110X16	SCREW 7991 10X16 ZN M/C	8
77	T91210X25	GALVANIZED SCREW 912 10X25	2
78	T91212X25	GALVANIZED SCREW 912 12X25	5
79	AP12	GALVANIZED WASHER 12	8
80	T91212X20	GALVANIZED SCREW 912 12X20	5
81	T91212X80	GALVANIZED SCREW 912 12X80	5
82	T9128X20	GALVANIZED SCREW 912 8X20	5
83	AG8	GALVANIZED GROOVED WASHER M8	4
84	T91210X16	GALVANIZED SCREW 912 10X16	4
85	AG10	GALVANIZED GROOVED WASHER M10	4
86	T799110X20	SCREW 7991 10X20 ZN M/C	8
87	T9128X80	GALVANIZED SCREW 912 8X80	5
88	T91210X50	GALVANIZED SCREW 912 10X50	5
89	TS14	GALVANIZED NUT 985 M14	8
90	T9128X20	GALVANIZED SCREW 912 8X20	1
91	A90218	GALVANIZED WASHER 9021 D8	4
92	T79916X30	SCREW 799 16X30 ZN M/C	8
93	AP6	GALVANIZED FLAT WASHER 6	8
94	T79910X45	SCREW 7991 10X45 ZN M/C	8
95	T79910X120	SCREW 7991 10X120 ZN M/C	8
96	T79916X20	SCREW 799 16X20 ZN M/C	4
97	AET1O,5	WASHER AET M10,5	6
98	AP8	GALVANIZED FLAT WASHER 8	8
99	PP6X120	PIN	2
		NATURAL STRENGTH PULL	
1	3020S082	COVER (SHIELD) SCHWINN 735X190X90 MM	1
2	6010 S002	PAINTED REAR COVER	1
3	6010 SOO1	PAINTED FRONT COVER	1
4	20100213	FRAME BRACKET	1
5	30205363	CHROME GUIDE POST D3OX 1500 MM	2
6	6020S001	PAINTED BRACKET 110 KG	1
7	6020S01N	FIRST WEIGHT PLATE SCHWINN	2
8	6020S02N	SECOND WEIGHT PLATE SCHWINN	20

-continued

Reference	Part Number	Description	Quantity
9	20200008	SELECTOR PIN SCHWINN	1
10	6020005N	SPRING	1
11	30508001	CHEST REST	1
12	60200003	COVER	1
13	70200013	SEAT SUPPORT GUIDE	1
14	7020S002	GUIDE	2
15	2050S003	UPHOLSTERED SEAT SCHWINN	1
16	10700007	SEAT ADJUSTING PLATE	1
17	10700006	SEAT PISTON	1
18	30002004	SEAT GUIDE SHAFT 280 MM	1
19	20100290	HANDLE FRAME	1
20	70208005	LEVER WDO8	1
21	20100307	RIGHT HANDLE CONNECTING ARM	1
22	10800001	BEARING KH 2540	4
23	70208001	CAR WD08	1
24	20100348	LEFT HANDLE CONNECTING ARM	1
25	10800012	BEARING 6206 ZZ	4
26	5020S015	CHROME BEARING COVER	2
27	5020S012	CHROME BEARING SEPARATOR	2
			2
28	10700026	RUBBER GRIP	3
29	30200370	GUIDE SHAFT DW08	2
30	20100287	CONVERGENT HANDLE	1
31	6010S003	TELESCOPIC HANDLE	1
32	5020S002	CHROME HANDLE TRIM	1
33	70208005	LEVER	1
34	3020S111	PULLEY SCHWINN	2
35	20100294	HANDLE LOCK (SUPPORT)	1
36	60200006	BLACK PAINTED BRACKET	1
37	30400003	BUSHING 5 MM	40
38	20100361	HANDLE COVER	1
39	T799116X30	GALVANIZED SCREW 7991 16X30	4
40	50200100	WASHER 25X8X7	1
41	10714022	MALE STOP SCREW 212/15 30X15 M8	1
42	3020S159	FASTENER	1
43	3020S019	BUSHING DI8XD10 25X138	1
44	20100357	RIGHT ARM	1
45	20100358	LEFT ARM	1
46	5020S007	CHROME STRAIGHT_BRACKET	2
47	7020S001	UNIVERSAL JOINT	2
48	7020S013	UNIVERSAL SHAFT	2
49	30205081	ANGLED UNIVERSAL	4
50	10200003	NYLON PULLEY	8
51	30205074	BUSHING D18XD10 25X68	1
52	1070S001	THREADED ARM 14/1.50	0.200 ML
53	10700005	BELT PU P-2 15 MM	8200 ML
54	5020S018	CHROME WASHER	4
55	7020S003	HANDLE	2
56	10709009	NUMBERING STRIP 5–100 KG	1
57	10700031	ROUND LOGOTYPE 19 CM. SCH	1
58	70208003	GROOVED SUPPORT WD08	1
59	10800003	BEARING 6200 ZZ	30
60	PP6X30	PIN	2
61	PP10X60	PIN	2
62	30400027	BLACK CAP M10	2
63	10800022	BEARING 6000 ZZ	4
64	5020S014	CHROME BEARING COVER	2
65	10800025	BEARING 6202 ZZ	4
70	T91210X100	GALVANIZED SCREW 912 10X100	6
71	T91210X65	GALVANIZED SCREW 912 10X65	6
72	T799110X50	SCREW 7991 10X50 ZN M/C	3

-continued

Reference	Part Number	Description	Quantity
73	T91210X60	GALVANIZED SCREW 912 10X60	1
74	TF10	GALVANIZED NUT 985 M10	16
75	T799110X100	SCREW 7991 10X100 ZN M/C	7
76	T799110X16	SCREW 7991 10X16 ZN M/C	8
77	T91210X25	GALVANIZED SCREW 912 10X25	2
78	T91212X25	GALVANIZED SCREW 912 12X25	5
79	AP12	GALVANIZED FLAT WASHER 12	8
80	T91212X20	GALVANIZED SCREW 912 12X20	5
81	T91212X80	GALVANIZED SCREW 912 12X80	5
82	T9128X20	GALVANIZED SCREW 912 8X20	5
83	AG8	GALVANIZED GROOVED WASHER M8	4
84	T91210X16	GALVANIZED SCREW 912 10X16	4
85	AG10	GALVANIZED GROOVED WASHER M10	4
86	P799110X20	SCREW 7991 10X20 ZN M/C	8
87	T9128X30	GALVANIZED SCREW 912 8X30	5
88	T91210X50	GALVANIZED SCREW 912 10X50	5
89	T514	GALVANIZED NUT 985 M14	8
90	T9128X20	GALVANIZED SCREW 912 8X20	1
91	A90218	GALVANIZED WASHER 9021 D8	4
92	T79916X30	SCREW 799 16X30 ZN M/C	8
93	AP6	GALVANIZED FLAT WASHER 6	8
94	T79910X45	SCREW 7991 10X45 ZN M/C	8
95	T9126X16	GALVANIZED SCREW 912 6X16	4
96	T79918X20	SCREW 799 18X20 ZN M/C	8
97	T79916X16	SCREW 7991 6X16 ZN M/C	8
98		HANDLE BEARING COVER	4
99	T799110X16	SCREW 7991 10X16 ZN M/C	8
100	T91212X30	GALVANIZED SCREW 912 12X30	5
101	T79918X16	GALVANIZED SCREW 7991 8X16 12.9	4
102	P9158X16	GALVANIZED PRISONER 8X16	2
103	AET10,5	WASHER AET M10,5	4

What is claimed is:

1. An exercise machine comprising:

a base frame;

a load movably attached to said base frame;

an arm assembly operably attached to said base frame to move in an angled direction relative to said frame;

a load actuation system operably attached between said movable load and said arm assembly;

wherein movement of said arm assembly causes said load actuation system to move, which moves said load.

2. An exercise machine as claimed in claim 1, wherein:

a. Said load actuation system includes a bar operably attached to said frame and a force transfer link operably attached between said arm assembly and said bar.

3. An exercise machine as claimed in claim 2, wherein said force transfer link has a first ball and socket joint at a first end operably connected to said arm assembly.

4. An exercise machine as claimed in claim 3, wherein said force transfer link further comprises a second ball and socket joint at said second end operably connected to said bar.

5. An exercise machine as claimed in claim 2, wherein said operable connection between said arm assembly and said bar is a direct drive connection.

6. An exercise machine as claimed in claim 2, wherein said operable connection between said arm assembly and said pulley bar is an indirect drive connection.

7. An exercise machine as claimed in claim 2, wherein said bar further comprises a short lever arm and a long lever arm, said second end of said force transfer link being operably connected to said short lever arm, and said long lever arm being operably connected to said a load actuation system.

8. An exercise machine as claimed in claim 7, wherein:

a. said bar is attached to said frame by a pivotal connection, and movement of said short lever arm by said force transfer link causes said longer lever arm to pivot about said pivotal connection to actuate said load actuation system.

9. An exercise machine as claimed in claim 8, wherein said exercise machine replicates a bench press exercise.

10. An exercise machine as claimed in claim 5, wherein said exercise machine replicates a seated rowing exercise.

11. An exercise machine as claimed in claim 5, wherein said exercise machine replicates a pull-down exercise.

12. An exercise machine as claimed in claim 5, wherein said exercise machine replicates a shoulder press machine.

13. A belt/pulley system for an exercise machine having a base frame, a load and at least one arm assembly for actuating the load, said belt/pulley system comprising:

a load pulley operably attached to said load;

at least one pair of directing pulleys operably attached to said frame;

at least one transverse stack frame pulley operably attached to said frame;

at least one transition pulley operably attached to said frame;

at least one set-up pulley operably attached to said frame;

at least one end pulley operably attached to said arm assembly;

a closed loop belt extending around said load pulley, upwardly to at least one pair of directing pulleys, downwardly to said at least one transverse stack frame pulley, outwardly to said at least one transition pulley, over to said at least one set-up pulley and upwardly to said at least one end pulley, and terminating in an end stop connected to said base frame.

14. A belt/pulley system as defined in claim 12, wherein movement of said arm assembly causes said end pulley to move and through said belt causes said load to be applied to said arm assembly.

* * * * *