United States Patent

Fairbanks

[15] **3,686,382**

[45] **Aug. 22, 1972**

[54] **METHOD FOR MAKING NET-LIKE STRUCTURES OF CURVED CONSTRUCTION**

[72] Inventor: **Theodore H. Fairbanks,** R.D. #1, Liverpool, Pa. 17045

[22] Filed: **Jan. 5, 1971**

[21] Appl. No.: **104,088**

Related U.S. Application Data

[63] Continuation-in-part of Ser. No. 848,009, Aug. 6, 1969, Pat. No. 3,601,850.

[52] **U.S. Cl.** **264/103,** 87/12.53, 156/167, 161/DIG. 6, 264/167, 264/DIG. 81

[51] **Int. Cl.**.....**D04g 1/00,** D02g 1/20

[58] **Field of Search**.....264/DIG. 81, 167, 103; 18/12 N, 8 R, 13 N; 161/DIG. 6; 156/167; 87/12, 53

[56] **References Cited**

UNITED STATES PATENTS

3,630,117	12/1971	Guy	264/103
3,012,275	12/1961	Nalle	264/DIG. 81
3,331,903	7/1967	Mine	264/DIG. 81
3,360,410	12/1967	Romanin	264/DIG. 81
3,518,720	7/1970	Fairbanks	18/8
3,562,046	2/1971	Guy	156/167
3,579,729	5/1971	Fairbanks	18/12 N
3,591,892	7/1971	Fairbanks	264/167
3,591,894	7/1971	Fairbanks	264/167

FOREIGN PATENTS OR APPLICATIONS

380,369	9/1964	Switzerland	264/DIG. 81

Primary Examiner—Jay H. Woo

Attorney—Thomas R. O'Malley, George E. Mueller and Eugene G. Horsky

[57] **ABSTRACT**

Method for making net-like structures of curved construction in which composite extrusion nozzles are each turned through an angle of 180° alternately with relative movement between nozzle sections along arcuate paths extending about a common center.

3 Claims, 4 Drawing Figures

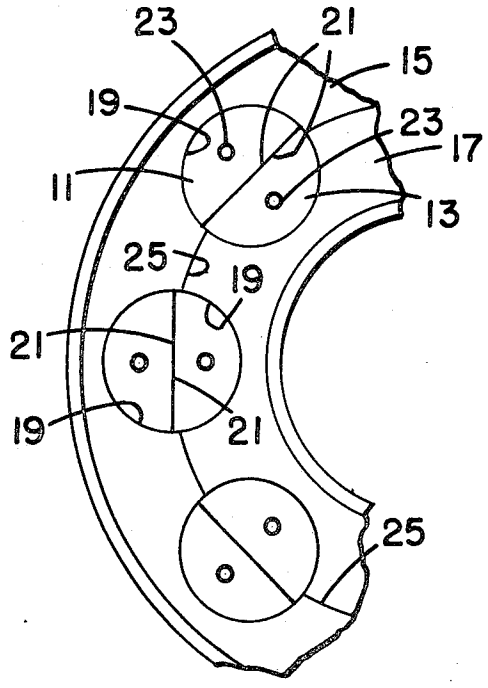

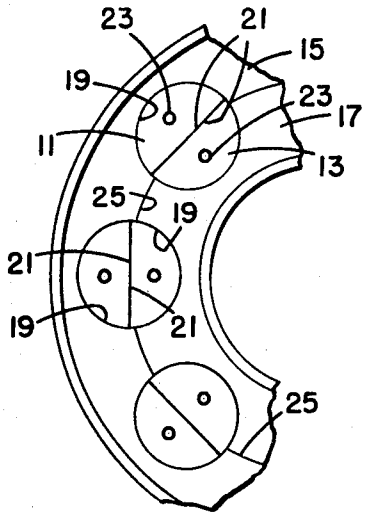

Fig. 1

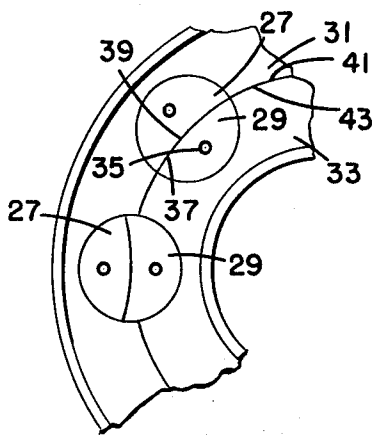

Fig. 2

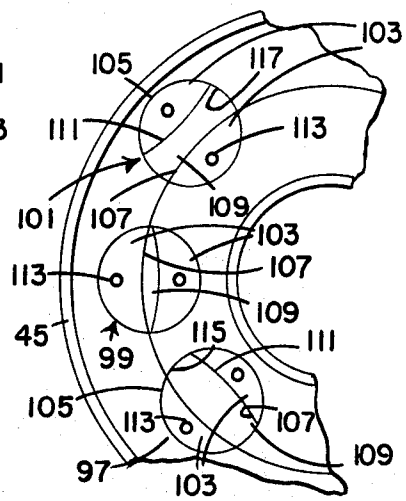

Fig. 3

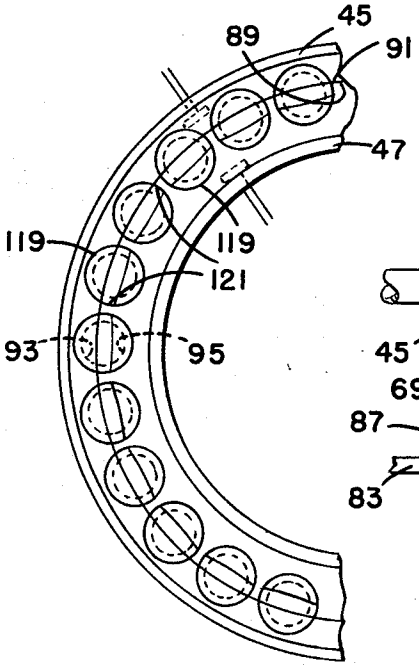

Fig. 4

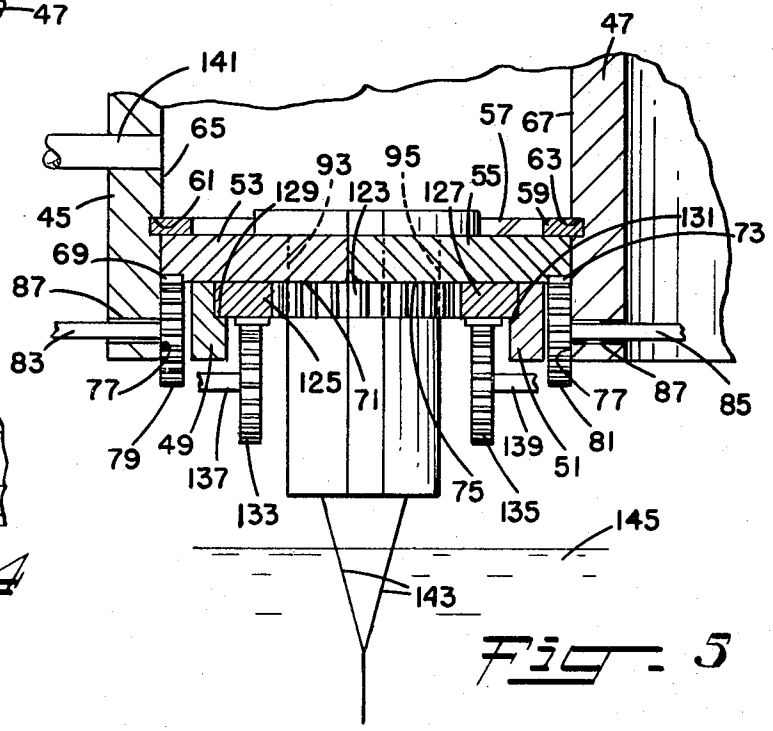

Fig. 5

METHOD FOR MAKING NET-LIKE STRUCTURES OF CURVED CONSTRUCTION

This application is a continuation-in-part of my application Ser. No. 848,009, filed Aug. 6, 1969 now U.S. Pat. No. 3,601,850.

The present invention is directed to a method for making net-like structures of curved construction having strands which are disposed in twisted and/or woven or braided relationship.

U.S. Pat. No. 3,331,903 discloses a method and apparatus for making a net from plastic material by extruding a plurality of pairs of filaments of plastic material in such a manner that the filaments in each pair are spaced from each other in a first direction and the pairs of filaments are spaced from each other a given distance in a second direction. The filaments of each pair of filaments are revolved, at the amount of their extrusion and before being solidified, about an axis extending between the filaments of each pair of filaments so as to twist the filaments of each pair together and to thus integrally connect the same. One of the filaments of each pair of filaments is then moved in a second direction a distance equal to the spacing between pairs of filaments while continuing the extrusion of the filaments, afterwhich the pairs of filaments are again revolved as heretofore described. By continuously repeating the above steps and setting the extruded filaments of plastic material, a net is provided.

The above-noted United States patent is concerned primarily with a method and apparatus for making a flat net, but does suggest that the teachings set forth therein are adapted also for making a tubular net. Of importance, however, is that regardless of the shape of the net produced the filaments forming such net are revolved through one or more complete revolutions as they are extruded and while they are still in a plastic condition so as to twist and integrally connect or bond the same to each other at their locations of twisting.

A primary object of this invention is to provide a generally new or improved and more satisfactory method for making net-like structures of curved or tubular construction by extrusion.

Another object of this invention is a new or improved method for making, by extrusion, continuous woven or braided net-like structures of curved or tubular construction.

Still another object is the provision of a method for making, by extrusion, woven or braided net-like structures of curved construction having a variety of interlaced strand or filament patterns.

These and other objects are accomplished in accordance with the present invention by a method in which a plurality of pairs of continuous streams of flowable strand-forming material are extruded in spaced relationship, with the streams in each such pair being located along opposite sides of a common arc or circle. The streams of at least some and preferably all pairs of streams are turned through an angle of only 180° or further multiple of 180° about an axis extending between the respective streams of each such pair of streams. Once turned, the streams of each such pair of streams are moved relatively in directions concentric with the arc or circle along which they are extruded to arrange at least certain of the streams of each pair of streams into different pairs. The streams of strand-forming material are set concomitantly with their extrusion, either prior to or after contact therebetween. By continuously repeating the above sequence of movements, with the continuous extrusion of the streams of strand-forming material, a net-like structure of curved or tubular construction is produced.

The streams of each pair of streams need not be spaced equal distances from the common arc or circle along which they are extruded, nor is it essential that the spacing between streams of all such pairs of streams be the same. The plurality of pairs of streams may be disposed generally along an arc of 360° or less, preferably with the axes about which the respective pairs of streams are turned being spaced equal angular distances from each other.

Relative movement of the streams of at least some and preferably all pairs of streams is effected, desirably but not necessarily, by moving the streams of each such pair of streams oppositely of each other in directions concentric with the arc or circle along which they are extruded. During such movement the streams of each pair of streams may be moved a distance equal to one-half of the angular spacing between adjacent pairs of streams or a further multiple thereof. It will be apparent that this relative movement of the streams of each such pair of streams may be varied either periodically or randomly throughout the method, providing it is a multiple of one-half of the given distance between the adjacent pairs of streams, to provide net-like structures with different strand patterns along their lengths.

When the plurality of pairs of streams are disposed generally along an arc of less than 360°, it is essential that the direction in which the pairs of streams are turned be reversed after each relative movement of the streams of such pairs, and that the direction of movement of the respective streams of each pair of streams during the relative movement thereof be reversed after each turning of the pairs of streams. This same procedure may be employed but is not essential when the plurality of pairs of streams are extruded at spaced intervals along an arc of 360°. In this latter array of streams, the pairs of streams may be turned 180° in the same direction after each relative movement between streams of such pairs, provided there is no reversal in the direction in which corresponding streams of the different pairs of streams are moved during their relative movement.

In the resulting net-like structure, the strands will be interlaced with each other in a woven or braided construction, or may be twisted together, depending upon the angle through which the streams forming such strands were turned during and/or following their extrusion. Setting of the extruded streams into strands may be effected prior to any contact between the extruded streams whereby the strands in the resulting net-like structure would be unbonded at their locations of crossing. Alternatively, the extruded streams may be set into strands after such streams have made contact with each other so that the strands in the resulting net-like structure would be bonded to each other at their locations of crossing.

The apparatus employed in the method of the present invention includes a plurality of composite nozzles each including a pair of like extrusion sections and a spacer section positioned therebetween. The nozzle extrusion and spacer sections are formed with mating

arcuate walls with the arcuate walls of all extrusion sections being of like radius. These extrusion sections are supported in spaced apart relationship with an arcuate wall of one such section of each of the plurality of nozzles extending along a common arc or circle having a radius equal to that of such arcuate walls.

Means are provided for intermittently turning nozzles through an angle of only 180° or further multiple of 180° about an axis located midway between the arcuate walls of the extrusion sections of such nozzles, and also for relatively moving the extrusion sections of each of the nozzles to rearrange the same into alignment with like extrusion sections of other of such nozzles. The means for effecting relative movement of the nozzle sections is operative alternately with the nozzle turning means and serves to move corresponding extrusion sections of the respective nozzles simultaneously and in the same direction along paths concentric with the common arc or circle.

At least one orifice extends through each of the nozzle extrusion sections and means are provided for delivering flowable strand-forming material to such orifices. Means are also provided for setting the streams of strand-forming material which are extruded from the orifices in the nozzle sections.

The arcuate walls of the nozzle extrusion sections may be of either convex or concave configuration, with the walls of the spacer sections being shaped to mate therewith. The apparatus may include at least one pair of nozzles in which the arcuate walls of the extrusion sections are of convex configuration and/or at least one pair of nozzles in which the extrusion sections have arcuate walls of concave configuration. While the arcuate walls of all of the nozzle extrusion sections must be of like radius, such radius may be varied; the smaller the radius, the more pronounced is the curvature of the resulting net-like structure.

In the apparatus employed in the method of the present invention for making tubular net-like structures, the nozzle supporting means includes a pair of concentric annular members, one of which is disposed with its outer peripheral surface slidably engaging with the inner peripheral surface of the other of such annular members. Cooperating recesses are formed along the contacting peripheral surfaces of the annular members and together define openings in which the composite nozzles are rotatably carried. In such apparatus, at least one of the annular members is driven, after each turning of the nozzles, in a direction which is the same or opposite to its prior movement. As heretofore mentioned, reversal in the direction of relative movement of the nozzle extrusion sections requires that the direction of nozzle turning also be reversed.

Tubular net-like structures formed in accordance with the present invention are particularly suited for use in the packaging of produce, such as potatoes, onions, etc. Net-like structures having a curvature of less than 360°, say 180° or 270°, may be combined to provide corrugated members which are suitable for use, for example, as shock absorbing insulation means.

The teachings of the present invention are applicable for use with a variety of materials, which are referred to by the terms "plastic" or "strand-forming materials", including polyolefins, such as polyethylene, polypropylene, polybutylene, polystyrene, polystyrene-acrylonitrile blends, acrylonitrile butadiene-styrene blends, acrylonitrile-butadiene copolymers, polybutene, polyisobutylene, polyisoprene, and isobutyleneisoprene copolymers; halogenated olefins, such as polyfluoroethylene, polychlorofluoroethylene, polychlorofluoropropylene, polyvinyl chloride, polyvinylidene chloride, polyvinyl chlorideacetate copolymer, polyvinyl chloride-polypropylene copolymer, polychloroprene, fluoroinated ethylene-propylene copolymers, vinylidene fluoride-chlorotrifluoroethylene copolymers, and vinylidene fluoride-hexafluoropropylene copolymers; polyesters, such as polyethylene terephthalate and copolymers thereof and polycarbonate; polyamides, such as polyhexamethyl adipamide, polycaprolactam, polyhexamethylene sebacamide, poly-aminoundecanoic acid; polyvinyl acetates; chlorinated polyethers, such as, ethylacrylate-chloroethylene vinyl ether copolymer; acrylic resins, such as polyacrylonitrile, polyacrylates and methacrylates; natural rubbers; compounded silicones; polyurethanes; polyethers; such as polyformaldehyde, formaldehyde-ethylene oxide copolymers, and polytrioxane; polysulfur resins, such as polysulfones and polysulfides; water-soluble, alkali soluble, and organic solvent-soluble cellulose esters and ethers, such as cellulose nitrate, cellulose acetate, cellulose butyrate, cellulose propionate, ethyl cellulose, viscose or cellulose xanthate, cuproammonium cellulose, and carboxymethyl cellulose; glasses; metals, etc. Such materials may include various additives such as stabilizers, dyes, foaming agents, etc., if so desired. It will be apparent that the manner by which the extruded streams are set will depend upon the particular plastic or strand-forming material which is being employed.

For a greater understanding of this invention, reference is made to the following detailed description and drawing in which

FIG. 1 is a diagrammatic view showing a portion of an apparatus employing teachings as suggested by U.S. Pat No. 3,331,903;

FIG. 2 is a view similar to FIG. 1 of a modified apparatus;

FIG. 3 is a view similar to FIG. 1 illustrating nozzles employed in the apparatus used in the method of the present invention;

FIG. 4 is a partial plan view of the apparatus used in the method of the present invention; and

FIG. 5 is a section taken vertically through the apparatus shown in FIG. 4.

As heretofore mentioned, U.S. Pat. No. 3,331,903 discloses a method and apparatus for making nets by extruding filaments of plastic material and periodically twisting such extruded filaments with each other one or more complete revolutions while they are still in a tacky condition to thus provide integral filament junctions.

More specifically, the apparatus described in the above United States patent includes two sets of nozzle members, each having a periphery defined by a semicircular wall and a flat wall, and each being formed with a bore for extruding a filament therethrough. The nozzle members in each set are spaced from each other a given distance and the nozzle members in the two sets are respectively arranged closely to each other to form pairs of adjacent nozzle members. Means are provided

for revolving each pair of nozzle members about an axis located between the bores thereof and for shifting the nozzle members of one set through the given distance of spacing so that each nozzle member of the one set is again closely arranged to a respective nozzle member of the other set to form a pair of adjacent nozzle members.

In the apparatus specifically described and illustrated in U.S. Pat. No. 3,331,903 the two sets of nozzle members are arranged in straight rows. The patentee does suggest, however, that it is also possible to arrange such sets of nozzle members along two concentric circles. This latter arrangement is illustrated in FIG. 1 of the accompanying drawing wherein nozzle members 11 of one set and nozzle members 13 of a second set are carried by annular supports 15 and 17, respectively. The periphery of each nozzle member of both such sets is defined by a semi-circular wall 19 and a flat wall 21, and each such members is provided with an extrusion bore 23.

In accordance with the method described in the above-noted U.S. patent, plastic material would be delivered to each of the nozzle members 11 and 13 of both sets of such nozzle members and would be extruded from the bores 23 as filaments. The nozzle members of the two sets, being aligned in pairs, would then be revolved through one or more complete revolutions by suitable means, not shown.

Continuing with the method as disclosed in the above-cited patent, one set of nozzle members would now be shifted so as to rearrange the nozzle members of such one set with different nozzle members of the other of such sets. It will be noted, however, that portions of the nozzle members 13 of one such series project beyond the inside peripheral wall 25 of the annular support 15 and thus neither of the annular supports 15 or 17 can be moved about its axis. Shifting of the nozzle members of one set of nozzle members relative to the other set thereof, as is required in the method disclosed in the cited patent, cannot be achieved and the apparatus shown in FIG. 1 of the accompanying drawing is considered inoperative.

While not disclosed nor suggested in the above-noted U.S. patent, the apparatus shown in FIG. 1 of the accompanying drawing may be modified to render the same capable of making net structures. As shown in FIG. 2 of the drawing, two sets of nozzle members 27 and 29 are carried by annular supports 31 and 33, with each nozzle member having an extrusion bore 35. These two sets of nozzle members differ from those shown in FIG. 1 in that the nozzle members 27 of one such set are each formed with an arcuate wall 37 which mates with an arcuate wall 39 formed on each of the nozzle members 39 of the other of such sets. The arcuate walls 37 and 39 of the nozzle members are of like radius, which is equal to that of the peripheral walls 41 and 43 of the annular supports 31 and 33, respectively.

In using the apparatus shown in FIG. 2 of the accompanying drawing, each pair of aligned nozzle members must be revolved one or more complete revolutions alternately with the shifting of one set of nozzle members relative to the other of such sets to rearrange the same into different pairs. When revolved, it is essential that the pairs of nozzle members of this apparatus be turned through one or more complete 360° revolutions. Failure to observe this limitation will render the apparatus of FIG. 2 inoperative. For example, moving the pairs of nozzle members through an angle of only 180° or further odd number multiple of 180° would dispose the nozzle members as shown at the lowermost portion of FIG. 2. In this position of the nozzle members, neither of the annular supports 31 or 33 is capable of turning about its axis and thus shifting of one set of nozzle members relative to the other of such sets could not be achieved.

From the above description it is believed clear that the apparatus shown in FIG. 1, which corresponds with that suggested in U.S. Pat. No. 3,331,903, is inoperative while the apparatus shown in FIG. 2 is adapted to provide only net structures having integral junctions at which filaments are twisted together through one or more turns.

The apparatus employed in the method of the present invention is also capable of providing nets as formed by the apparatus shown in FIG. 2 but, more important, is adapted for use in the manufacture of net-like structures of curved or tubular construction in which strands or filaments are interlaced with each other in a woven or braided relationship.

Referring to FIGS. 3–5 of the drawing, the illustrated apparatus includes a pair of concentric cylinders 45 and 47 which are held in fixed positions by suitable supporting structures, not shown. At their lowermost ends, the cylinders 45 and 47 each include an integral flange 49 and 51, respectively, on which are slidably carried a pair of concentric, annular nozzle support members 53 and 55. Split rings 57 and 59 are seated within grooves 61 and 63 formed in opposing walls 65 and 67 of the cylinders 45 and 47, respectively, and serve to retain the annular members 53 and 55 against the cylinder flanges.

At least one of the annular members 53 and 55 is adapted to be rotated or oscillated about its axis and in the preferred construction both such members 53 and 55 are capable of rotation. As shown in FIG. 5, gear teeth 69 are machined into the bottom wall 71 of the annular member 53 at a location adjacent to its outer periphery, while like gear teeth 73 are formed in the bottom wall 75 of the annular member 55 but adjacent to its inner periphery. One or more openings 77 are provided in each of the cylinder flanges 49 and 51 for accommodating gears 79 and 81 which mesh with the teeth 69 and 73, respectively, formed in the annular members 53 and 55. The gears 79 and 81 are fixed, respectively, to shafts 83 and 85 which pass through openings 87 in the cylinders 45 and 47 and are intermittently driven by suitable means, not shown.

Opening along contacting peripheral surfaces 89 and 91 of the annular members 53 and 55 are recesses 93 and 95, respectively, which are of like radius and, when aligned with each other, together define circular openings within each of which is disposed a composite, circular nozzle, As more fully described hereafter, the composite nozzles are retained within the aligned recesses in the annular members 53 and 55 by flange portions formed along the uppermost ends thereof.

In FIG. 3 are illustrated various forms of composite nozzles 97, 99 and 101 which are suitable for use in the apparatus used in the method of the present invention. The nozzles 97, 99 and 101 all include a pair of like ex-

trusion sections **103**, each having arcuate walls **105** and **107**, and the spacer section **109** having like arcuate walls **111** which mate with the walls **107** of the extrusion sections. The arcuate walls **105** of the nozzle extrusion sections **103** are of a radius substantially equal to that of the recesses **93** and **95** in the annular members **53** and **55**, while the walls **107** thereof are of a radius substantially equal to that of the peripheral surfaces **89** and **91** of the annular members **53** and **55**. Common also to each of the different forms of nozzles **97**, **99** and **101** is at least one orifice **113** extending through each of the extrusion sections **103**.

The composite nozzles **97**, **99** and **101** are of like circular cross-section and differ only in the size and/or shape of the sections thereof. More particularly, the spacer section **103** of the nozzles **97** and **99** are of like configuration and differ only in size. Thus the spacer section **109** of the nozzle **97** is larger than the spacer section **109** of the nozzle **99** and includes also arcuate walls **115** which form part of the nozzle periphery. On the other hand, the nozzle **101** differs from the nozzles **97** and **99** in that the arcuate walls **107** of extrusion sections **103** are of convex configuration while the mating walls **111** of its spacer section **109** are concave in shape. The spacer sections **109** of the nozzle **101** also includes arcuate walls **117** which form part of the nozzle periphery.

The plurality of nozzles employed in the described apparatus may be alike. Alternatively, the nozzles may differ in size and/or shape. For example, at least one pair of each of the different nozzles may be present in the same apparatus. For simplicity and ease of description, all composite nozzles employed in the apparatus shown in FIGS. **4** and **5** are of like size and shape and correspond to nozzles **97** shown in FIG. **3**.

The nozzles **97** each include flange portions **119** and **121** projecting from the extrusion and spacer sections, respectively, which are adapted to rest upon the top surfaces of the annular members **53** and **55**. Each of the nozzles **97** is adapted to be periodically turned about its axis through an angle of only 180°, or further multiple thereof, and for this purpose are provided with gear teeth **123**. Ring gears **125** and **127** mesh with the teeth **123** on the nozzles **97** and, when driven, serve to turn all of the nozzles simultaneously and in the same directions.

The flanges **49** and **51** of the cylinders **45** and **47** are recessed at **129** and **131**, respectively, to retain the ring gears **125** and **127** in position yet permit free sliding movement thereof. The ring gears **125** and **127** are moved in a sequence, as hereafter described, by gears **133** and **135** which are fixed to shafts **137** and **139**. Suitable means, not shown, are provided for intermittently driving the shafts **137** and **139** and for carrying such shafts and their driving means with the respective annular members **53** and **55** so as to avoid imparting any turning movement to the nozzle sections while such annular members are being moved relative to each other.

With the various elements of the apparatus in a starting position as shown in FIGS. **4** and **5**, a flowable strand-forming material, such as a molten thermoplastic material, is delivered inbetween the cylinders **45** and **47**, as through a conduit **141**. Such flowable strand-forming material is delivered under pressure and is extruded from the nozzle orifices **113** as continuous streams **143** which are set in a liquid **145**, which may be cool water.

All of the nozzles **97** are simultaneously turned in the same direction and through an angle of 180°, or further multiple thereof by the ring gears **125** and **127** which are rotated in opposite directions about their common axis by driving the shafts **137** and **139** in opposite directions. The annular members **53** and **55** are held stationary during the turning of the nozzles **97** and, once such turning is completed, the nozzles remain stationary while relative movement is effected between the annular members **53** and **55**.

The purpose of relative movement between the annular members **53** and **55** is to rearrange or pair the respective extrusion sections **103** of the individual nozzles **97** with extrusion sections of other of such nozzles alternately with the turning of the nozzle sections about their respective axes. Thus, such relative movement may be provided by rotating either one of the annular members **53** and **55** about its axis or by rotating both of such annular members in the same direction but at different rates of speed or in opposite directions.

Shifting of the annular member **53** and/or the member **55** is achieved by driving the gear **79** and/or the gear **81** which are in meshing relationship with the teeth **69** and **73** formed in the bottom walls **71** and **75** of the respective annular members. As heretofore mentioned, the ring gears **125** and **127** and their driving means are supported so as to shift with the respective annular members **53** and **55** and thereby insure that no torque is applied to the nozzle sections during this shifting movement.

The degree of relative movement between the annular members must be at least such as to shift an extrusion section **103** of the individual nozzles **97** into alignment with an extrusion section **103** of a nozzle directly adjacent thereto. For example, if only one of the annular members **53** and **55** is shifted, it would be moved through an angle equal to at least the original angular spacing between the axes of adjacent nozzles, as measured along the surfaces **89** and **91** of such members. Such one annular member may be moved through a distance equal to a multiple of such angle and such distance may be varied through the method to vary the strand pattern in the resulting net-like structures. Of course, if the apparatus includes nozzles having sections of different size and/or sections of different shape, as for example nozzles **97** and **101** shown in FIG. **3**, the relative movement between the annular members **53** and **55** must be such as to insure that like nozzle extrusion sections are paired with each other.

Assuming, for purposes of description, that the annular members **53** and **55** are both shifted in opposite directions relative to each other, the distance such members are moved must be at least equal to one-half of the angular spacing between the axes of adjacent nozzles, as measured along the surfaces **89** and **91** of such surfaces. It will be noted from FIG. **4** that during this shifting of the annular members **53** and **55**, one of the extrusion sections **103** of each nozzle **97** will move with the annular member **53** while the other of extrusion section **103** and spacer section **109** of each such nozzle will travel with the annular member **55**.

After this rearrangement of the nozzle sections, the annular members **53** and **55** are again held stationary while the nozzles **97** are again turned through an angle of 180° or further multiple thereof in a direction which is either the same or opposite to that of their prior turning movement. Following this turning of the nozzles **97**, relative movement between the annular members **53** and **55** is again effected.

The angle through which the nozzles **97** are turned is important both from the standpoint of the net-like structure produced and the practice of the method itself. For example, if the nozzles **97** of the illustrated apparatus are turned through an angle of 360° or further multiple of 180°, the strands formed by the streams of strand-forming material extruded from the orifices **113** will be twisted together at their locations of crossing. In this instance no special care need be taken in the direction in which the nozzles are turned, providing all are turned in the same direction. Similarly, each shifting of the annular members **53** and **55** may be in the same direction as the prior shifting of such respective members.

On the other hand, if the nozzles **97** moved through an angle of only 180° during each turning thereof the strands in the resulting net-like structure will be disposed in a woven or braided relationship. As long as there is no change in the direction of turning of the nozzles **97**, no change is necessary in the direction of shifting of the respective annular members **53** and **55**. If, however, the nozzles **97** are turned in a direction opposite to their immediately prior turning movement, then it is essential that the directions in which the annular members **53** and **55** are shifted be opposite to that of their immediately prior movement.

As can be seen from the above description, in the manufacture of tubular net-like structures the method of the present invention can be varied considerably, as by shifting the member **53** and/or the member **55**, by varying the angle through which such members are shifted and by changing the directions in which the nozzles **97** and members **53** and **55** are moved. These variations in the method of the present invention will, of course, provide for different strand patterns in the resulting net-like structure.

When making net-like structures of a curved configuration which is less than 360°, the member **53** and/or the member **55** may be shifted and the angle through which such members are moved may be varied to some degree. However, in the manufacture of such curved net-like structures it is essential that only complete nozzles **97** be turned and that their direction of turning be reversed after the member **53** and/or the member **55** is shifted. Likewise, the direction in which the member **53** and/or **55** is shifted must also be reversed after each turning of complete nozzles **97**.

For example, the support members **53** and **55** may be provided with recesses **93** and **95** at spaced intervals along only a **180°** arc of their respective peripheries **89** and **91**. When such recesses **93** and **95** are aligned, circular openings are provided within each of which is disposed a nozzle **97**. With flowable strand-forming material being extruded from each of the extrusion section orifices, the nozzles **97** are all turned 180° in one direction about their respective axes. Either of the members **53** and **55** is then shifted, for example a distance equal to the angular spacing between nozzles **97** as measured along the peripheries of the members **53** and **55**. Alternatively the members **53** and **55** may be shifted in opposite directions a distance equal to one-half of the angular spacing between nozzles.

As a result of this latter movement, an extrusion section **103** of each of the outermost nozzles of the series of nozzles **97** are, in effect, moved in opposite directions relative to each other and no longer form part of complete nozzles **97**. The complete nozzles **97** are now turned 180° about their respective axes but in a direction opposite to their prior turning. Of course, in such embodiment teeth would be omitted from along those portions of the ring gears **125** and **127** which are adjacent to the nozzles sections **103** which are not part of complete nozzles **97**. Once turning of the complete nozzles is effected, either one or both of the members **53** and **55** are shifted but in a direction opposite to their prior movement.

In making net-like structures of tubular construction or of a curved construction which is less than 360°, it will be noted that as a result of consistently moving the nozzles **97** through an angle of only 180° during each turning thereof; that is, alternately with the shifting of the support members **53** and **55**, the extrusion sections **103** of such nozzles travel along intersecting sinuous paths and are periodically shuttled from one annular member **53** and **55** to the other thereof. The streams of flowable strand-forming material issuing from the orifices **113** in the nozzle extrusion sections **103** of course follow like paths and when set provide a net-like structure having strands which are interlaced in a woven or braided relationship. As heretofore mentioned, the extruded streams of strand-forming material may be set before or after they have contacted each other, depending upon the characteristics, such as flexibility, strand stability, etc. desired in the finished structure.

I claim:

1. A method of making a curved net-like structure by extrusion including the steps of extruding a plurality of spaced pairs of continuous streams of flowable strand-forming material, with the streams of each pair of streams being located along opposite sides of a common arc, turning the streams of at least some of the pairs of streams through only an odd number of 180° turns, greater than one, about an axis extending between the respective streams of each pair of streams, relatively moving the streams of each pair of streams in directions concentric with the common arc to arrange at least certain of the streams of each pair of streams into different pairs, setting the streams into strands concomitantly with their extrusion, and repeating the above sequence of movements.

2. A method as defined in claim **1** wherein the streams of strand-forming material are set prior to any contact therebetween.

3. A method as defined in claim **1** wherein the streams of strand-forming material are set after they have contacted each other.

* * * * *

PO-10[illegible]
(5/69)

UNITED STATES PATENT OFFICE
CERTIFICATE OF CORRECTION

Patent No. 3,686,382 Dated August 22, 1972

Inventor(s) Theodore H. Fairbanks

It is certified that error appears in the above-identified patent and that said Letters Patent are hereby corrected as shown below:

Front page, left column, line 6, insert --(73) Assignee: FMC Corporation, Philadelphia, Pa. --. Col. 5, line 56, "39" should read -- 29 --. Col. 6, line 60, the comma (,) appearing after "nozzle" should be a period -- . --

Signed and sealed this 6th day of February 1973.

(SEAL)
Attest:

EDWARD M.FLETCHER,JR.
Attesting Officer

ROBERT GOTTSCHALK
Commissioner of Patents