United States Patent [19]

Verdier

[11] **Patent Number: Des. 282,289**

[45] **Date of Patent: ** Jan. 21, 1986**

[54] **COMBINED RECHARGEABLE FLASHLIGHT AND RECHARGING STAND THEREFOR**

[75] Inventor: **Alain Verdier**, Sainte-Foy-Les-Lyon, France

[73] Assignee: **Black & Decker, Inc.**, Newark, Del.

[**] Term: **14 Years**

[21] Appl. No.: **517,417**

[22] Filed: **Jul. 26, 1983**

[30] **Foreign Application Priority Data**

Jan. 26, 1983 [FR] France 830247

[52] **U.S. Cl.** **D26/46;** D13/6

[58] **Field of Search** D26/37–50, D26/51; 362/157, 158, 183–208; D13/5, 6; 320/2

[56] **References Cited**

U.S. PATENT DOCUMENTS

D. 205,679	9/1966	Moore et al.	D26/46
D. 272,476	1/1984	McCloskey et al.	D26/46
3,183,891	5/1965	MacDonald	D13/6 X
3,281,637	10/1966	Hultquist	362/183 X
3,517,185	6/1970	Moore et al.	362/183

Primary Examiner—Susan J. Lucas

Attorney, Agent, or Firm—Finnegan, Henderson, Farabow, Garrett & Dunner

[57] **CLAIM**

The ornamental design for a combined rechargeable flashlight and recharging stand therefor, as shown and described.

DESCRIPTION

FIG. **1** is a perspective view of a combined rechargeable flashlight and recharging stand therefor showing my new design;

FIGS. **2–7** are, respectively, rear, top, bottom, left side, right side and front views of the rechargeable flashlight, the recharging stand being omitted for purposes of disclosure;

FIGS. **8, 9, 10, 11** and **12** are, respectively, rear, top, left side, right side and front views of the combined rechargeable flashlight and recharging stand as shown in FIG. **1**; and

FIG. **13** is a perspective view of the recharging stand, the rechargeable flashlight being omitted for purposes of disclosure.

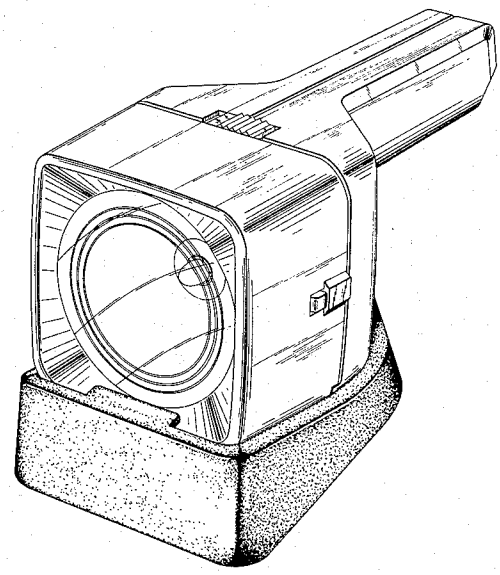

Fig. 1

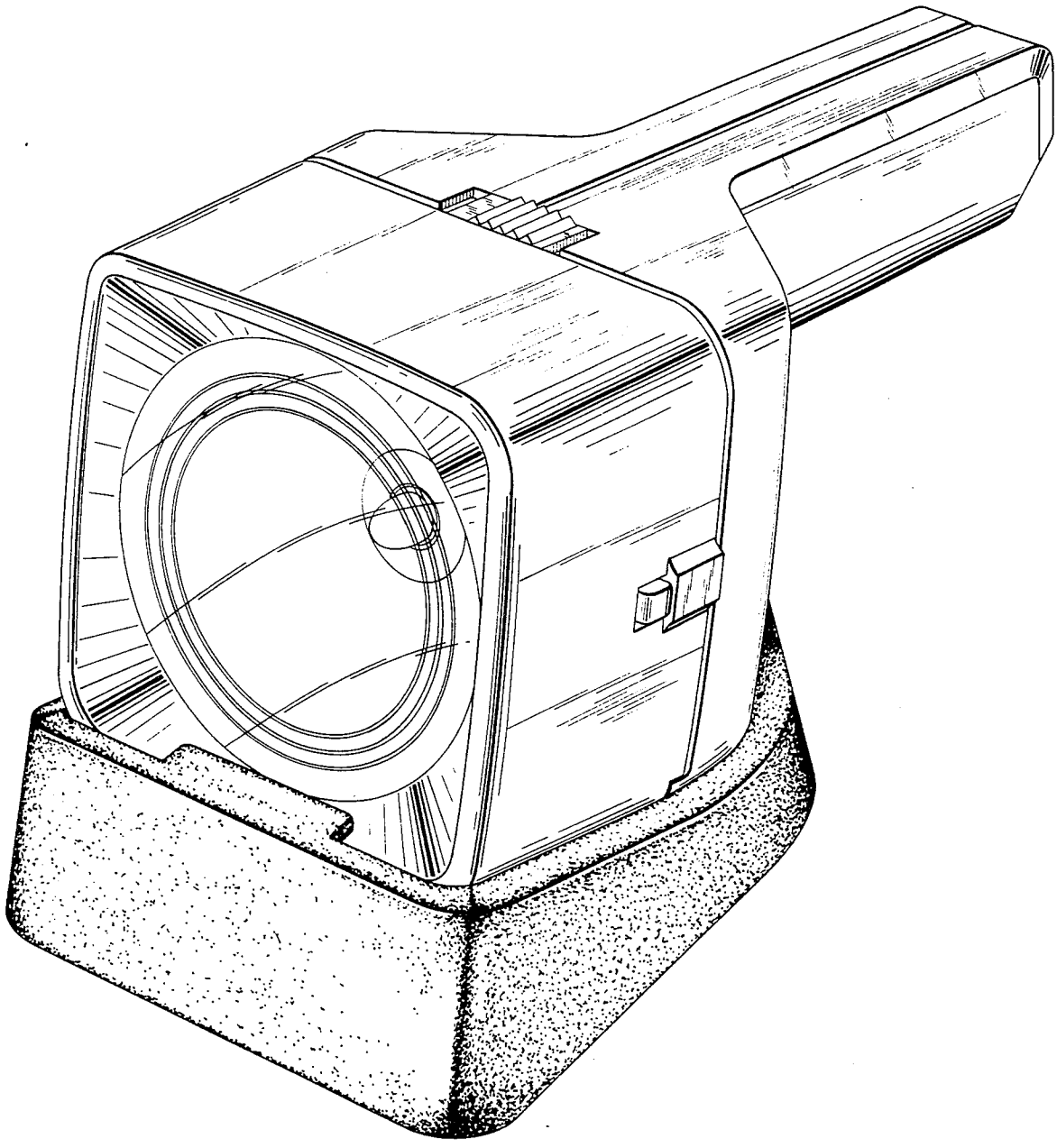

Fig. 1

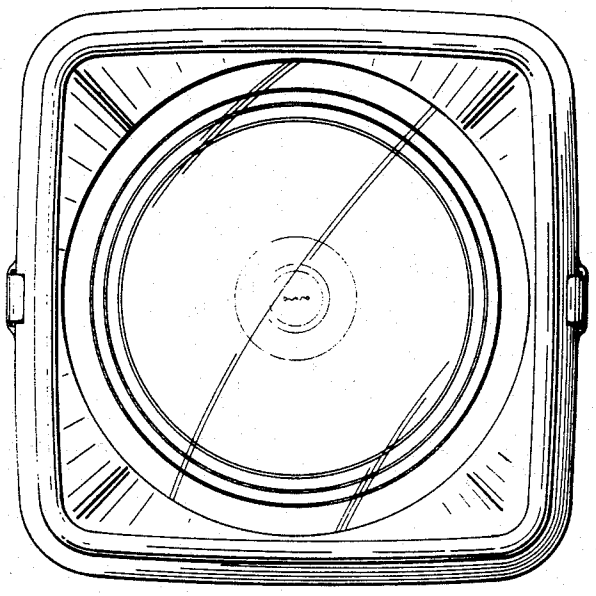

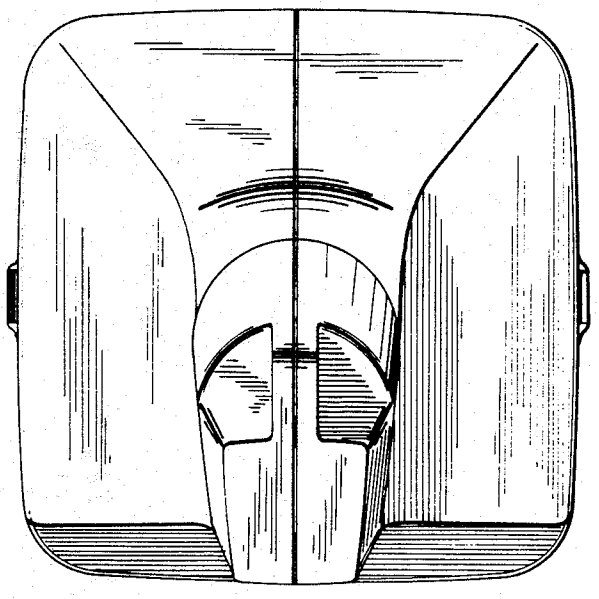

Fig. 2

Fig. 3

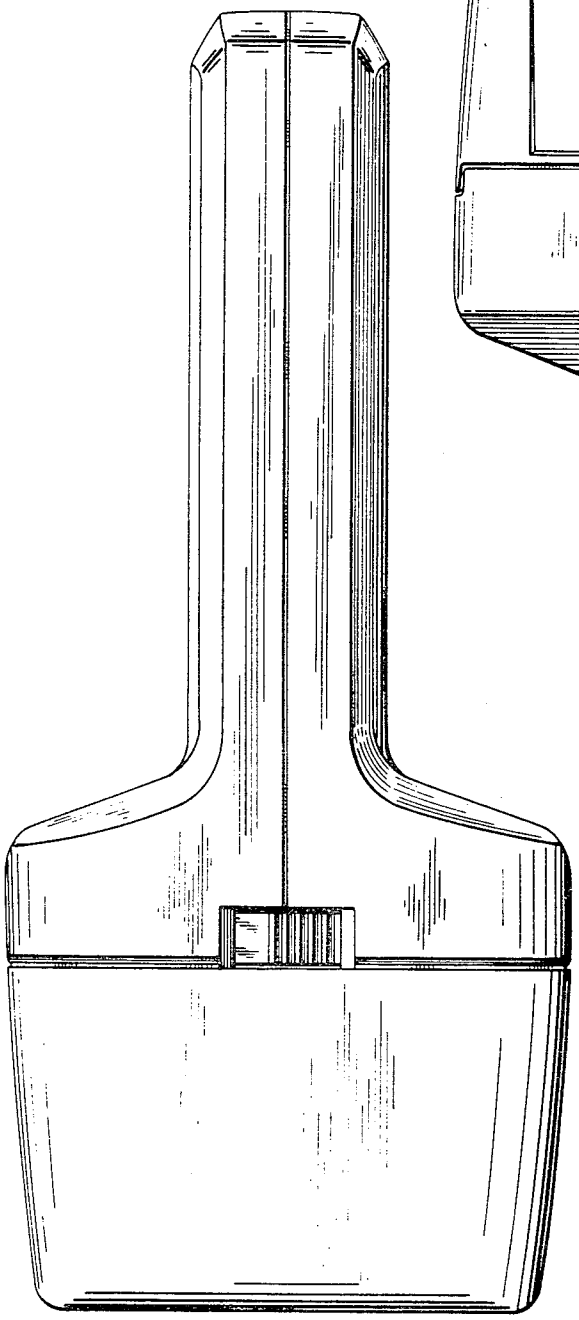

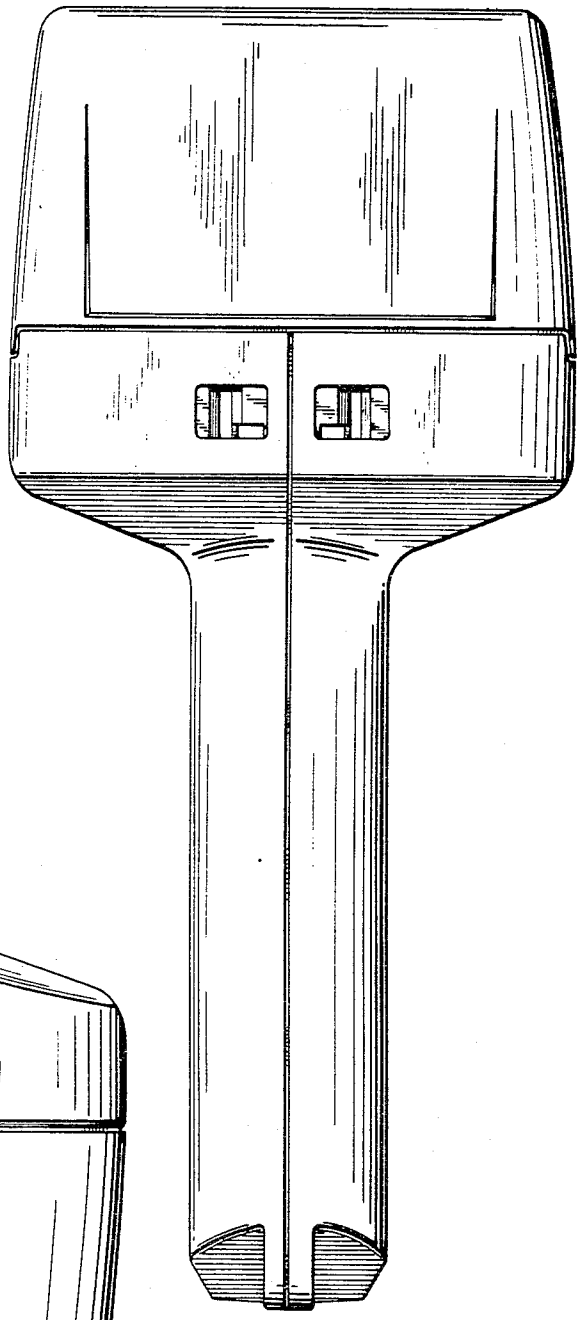

Fig. 4

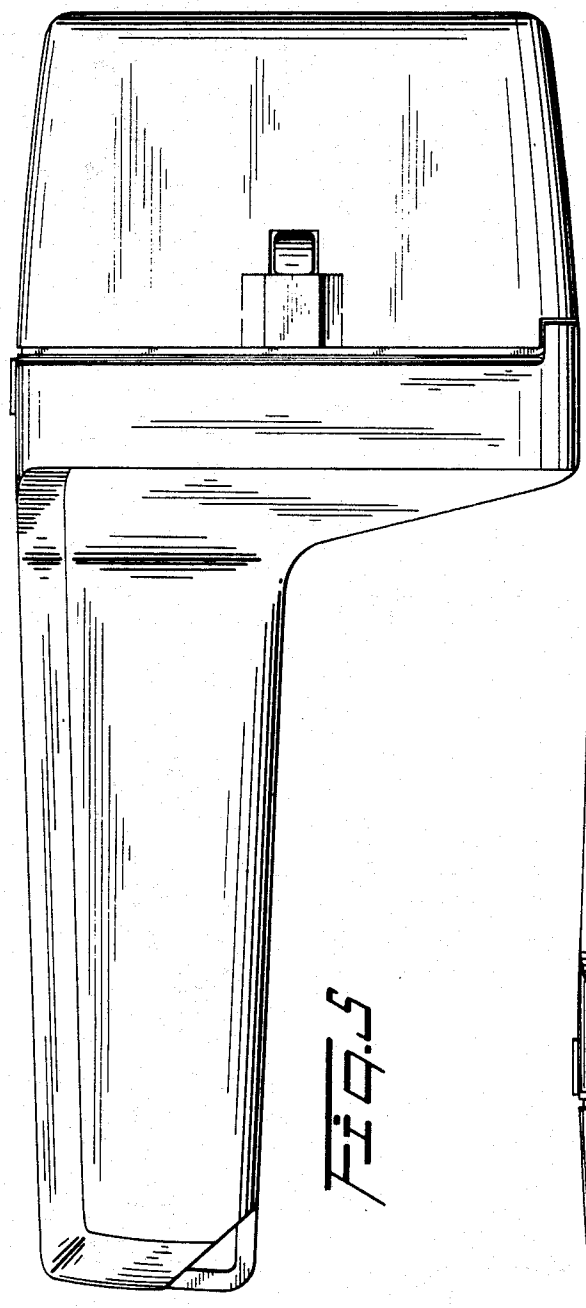

Fig.5

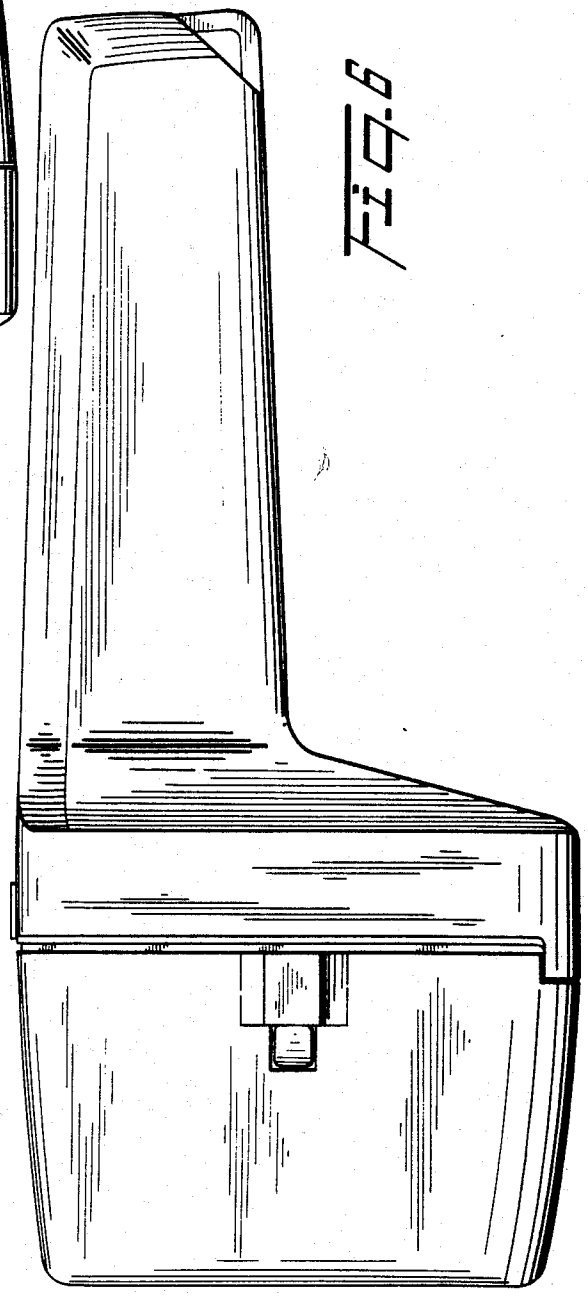

Fig.6

Fig. 12

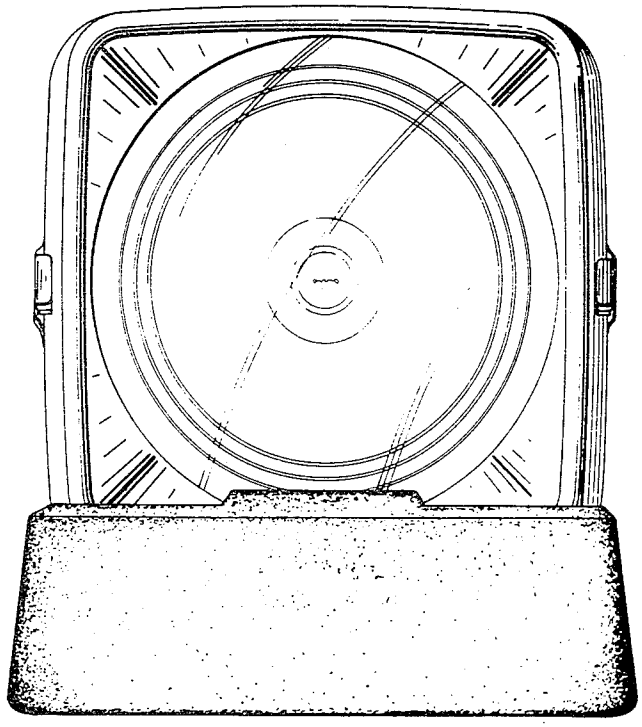

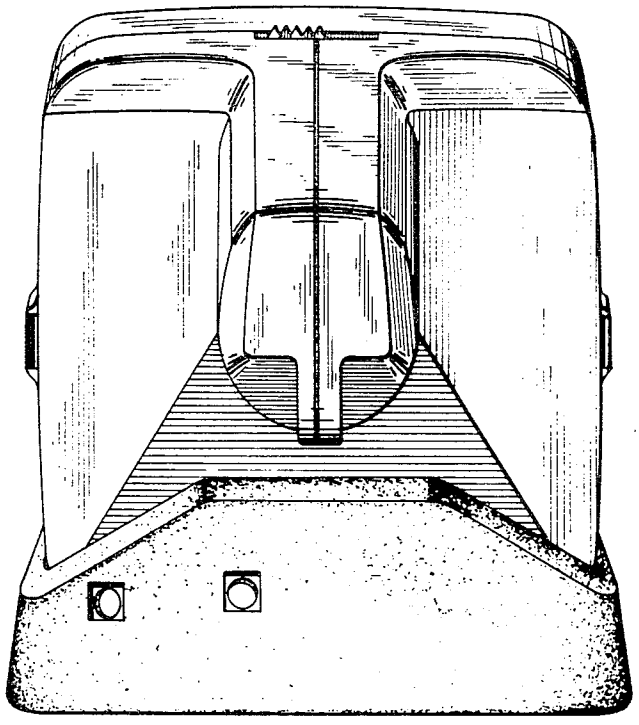

Fig. 8

FIG. 9

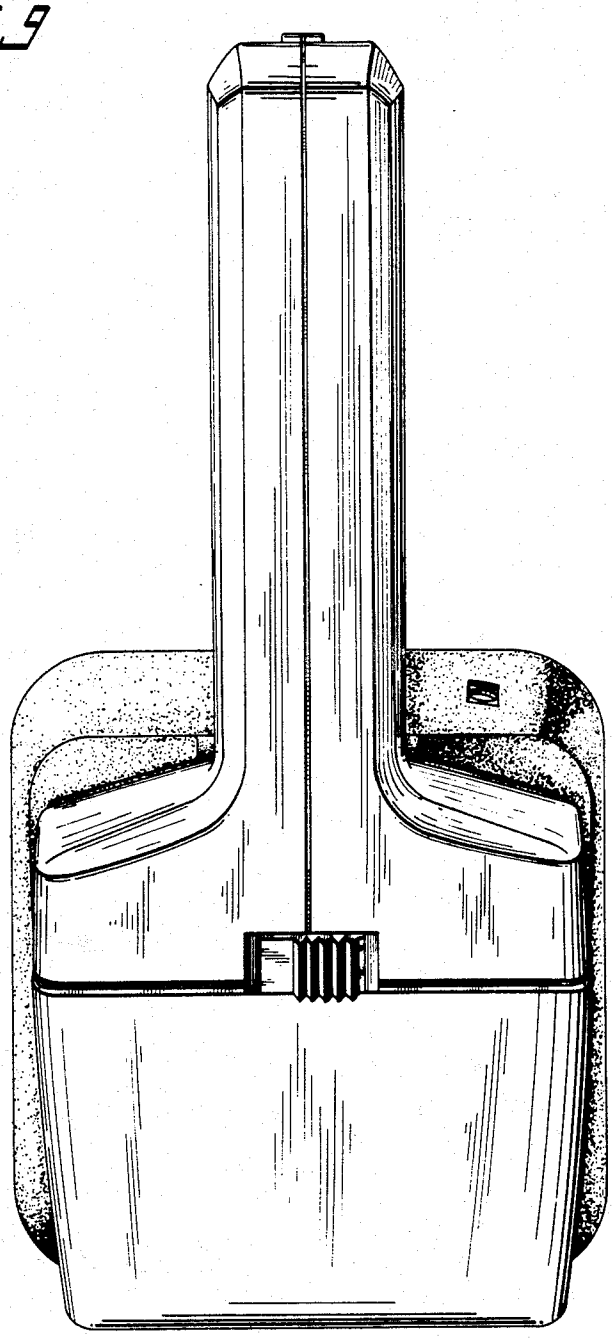

Fig. 10

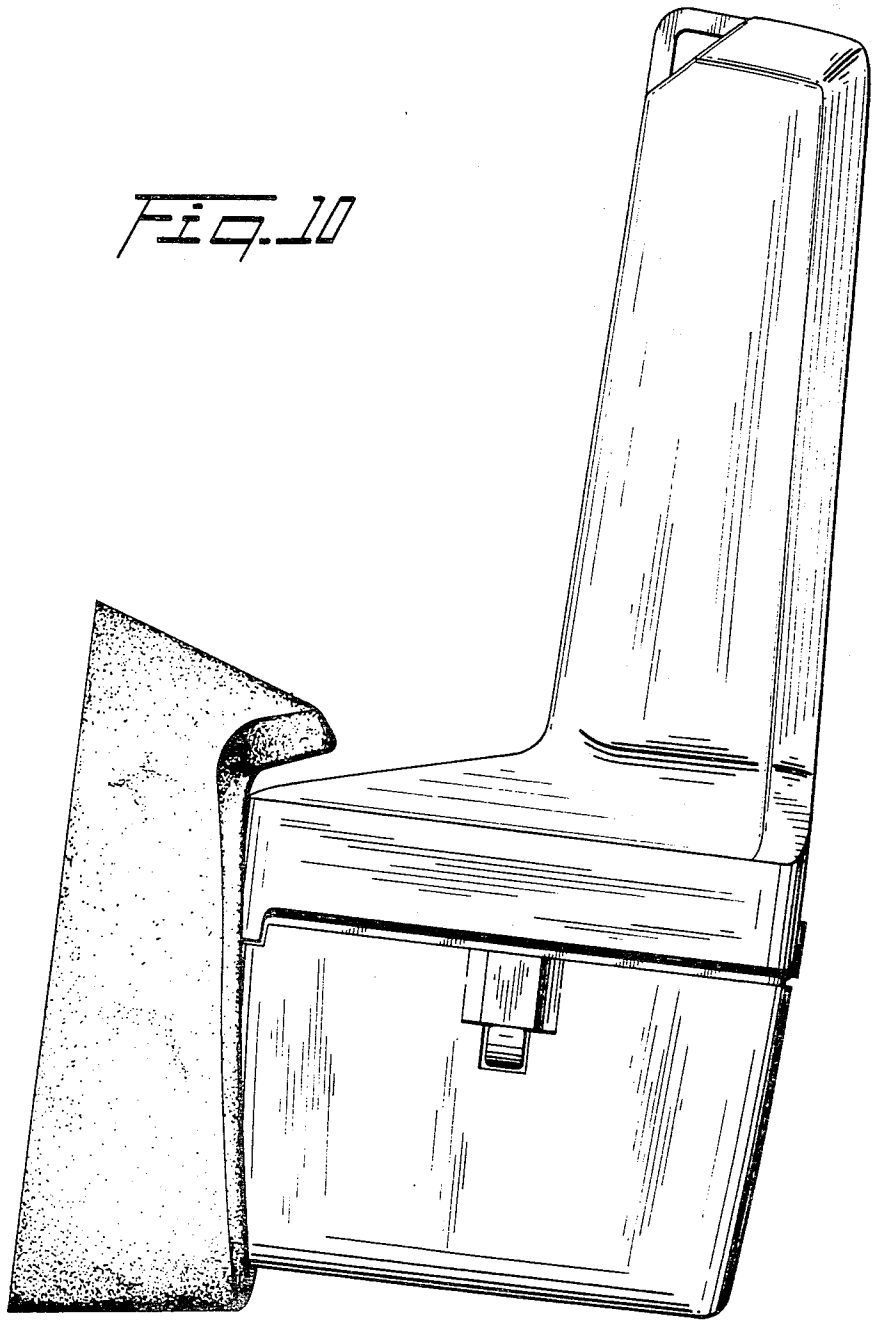

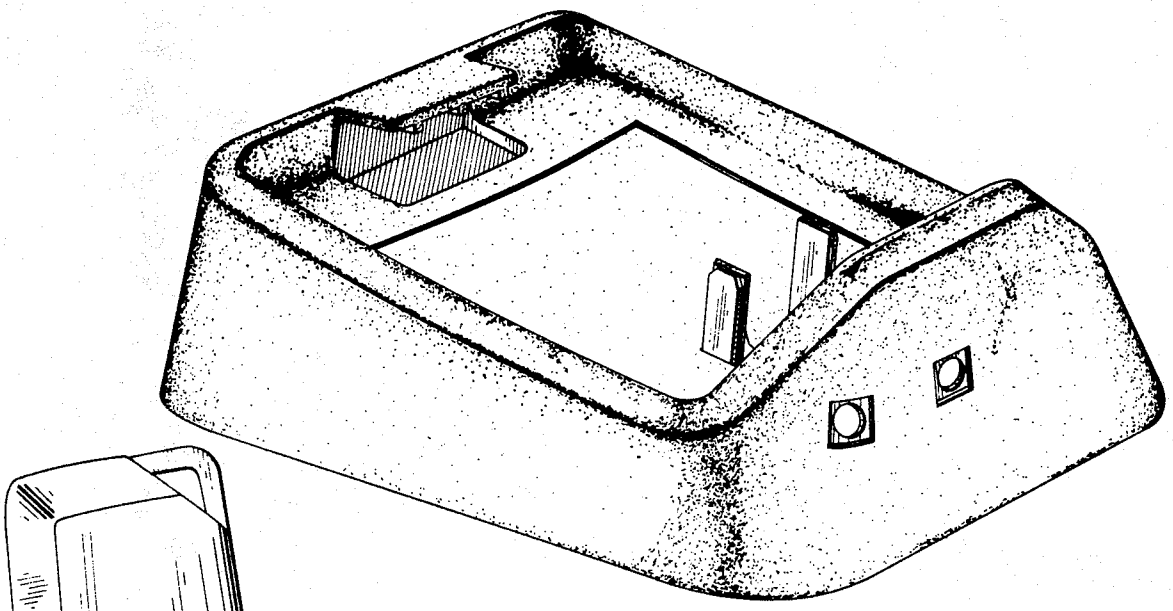

Fig. 13

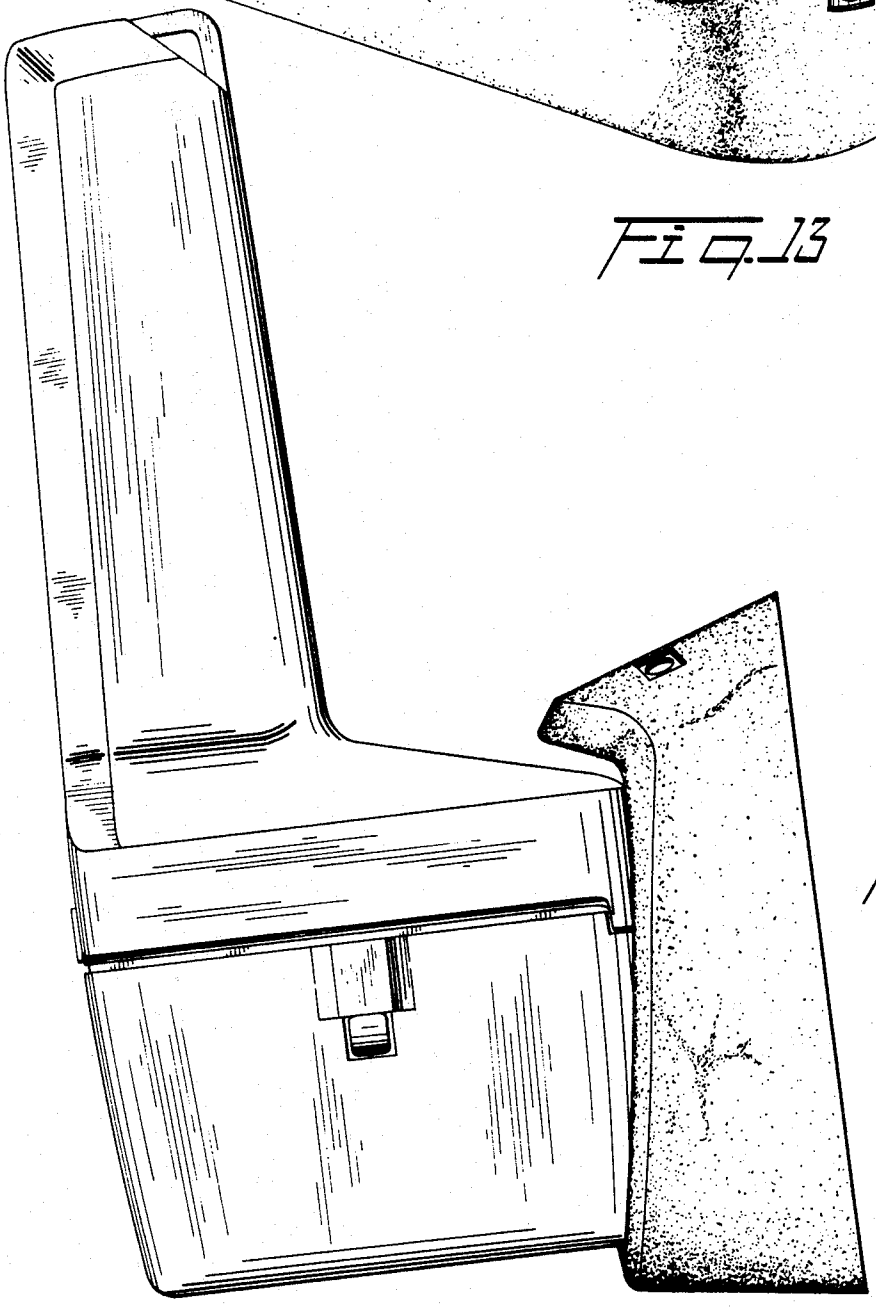

Fig. 11