Feb. 15, 1944. H. C. GRANT, JR 2,341,538

SYSTEM FOR STORING AND DISPENSING FLUID PRESSURE MEDIUMS

Filed June 7, 1941

Fig. 1

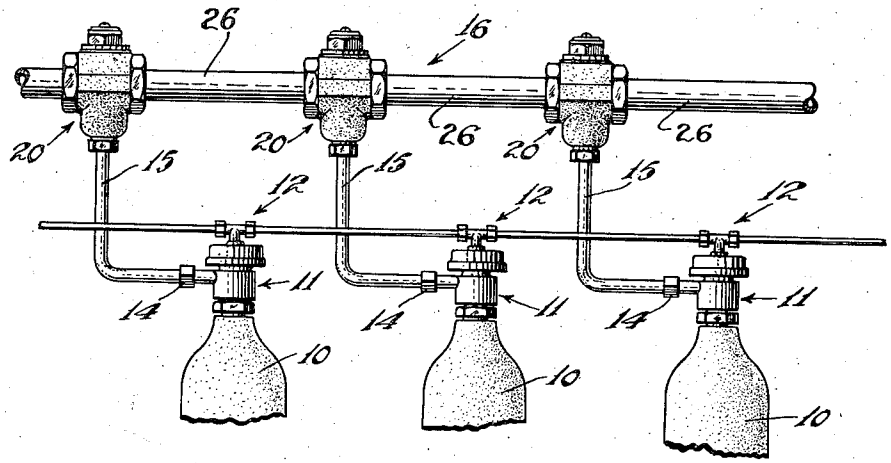

Fig. 2

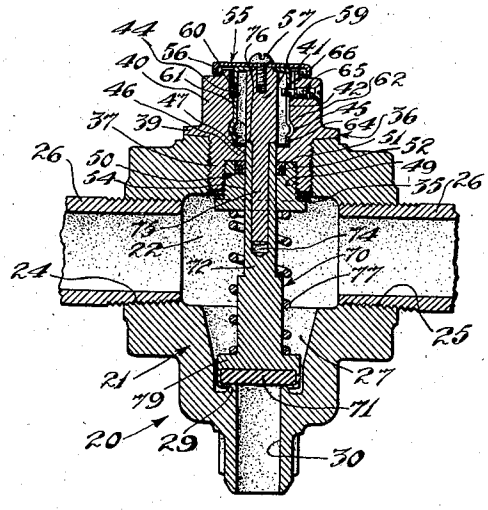

Fig. 3

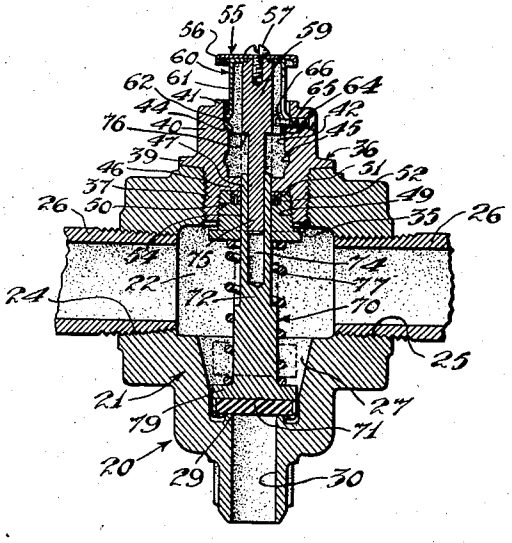

INVENTOR
Harry C. Grant, Jr.
BY
J. William Carron
ATTORNEY

Patented Feb. 15, 1944

2,341,538

UNITED STATES PATENT OFFICE

2,341,538

SYSTEM FOR STORING AND DISPENSING FLUID PRESSURE MEDIUMS

Harry C. Grant, Jr., New York, N. Y., assignor to Specialties Development Corporation, Bloomfield, N. J., a corporation of New Jersey

Application June 7, 1941, Serial No. 396,973

10 Claims. (Cl. 116—117)

The present invention relates to a system for storing and dispensing a fluid pressure medium, such as liquid carbon dioxide, which may be used for extinguishing fires, for inflating flotation bags, for effecting emergency operation of pressure controlled apparatus and for other purposes. More particularly, the invention relates to a system comprising two or more containers of fluid pressure medium adapted to be discharged simultaneously or successively, wherein an improved valve is provided for each container which indicates when the container has been discharged and also serves to prevent the loss of fluid pressure medium in the event one or more containers have been removed from the system.

An object of the present invention is to provide an improved system for storing and dispensing a fluid pressure medium.

Another object is to provide a system comprising a plurality of containers of fluid pressure medium, each having a valve operatively associated therewith for permitting removal of one or more of the containers from the system without loss of fluid pressure medium in the event the system is operated while one or more containers are so removed.

Another object is to provide a system of the foregoing type wherein an indicator is operatively associated with each container for visibly indicating when a given container has been discharged.

Another object is to provide an improved valve for a system of the foregoing type which serves both as a check valve for preventing loss of pressure medium and also as means for indicating when a container associated with the valve has been discharged.

A further object is to provide an improved indicator for each container of a system of the foregoing type which is simple and inexpensive in construction, positive in operation, and is adapted to be maintained in indicating position after the pressure medium has been discharged.

Other and further objects, not specifically enumerated above, will be apparent when described in greater detail in connection with the accompanying drawing, wherein:

Figure 1 is a diagrammatic view of a system for storing and dispensing a fluid pressure medium, illustrating an embodiment of the invention.

Figure 2 is an enlarged detailed sectional view of a valve or fitting provided in the system to serve as an indicator and as means for permitting removal of a container from the system.

Figure 3 is an enlarged sectional view similar to Figure 2, but showing the indicator in indicating position after discharge of the pressure medium from the container with which the valve is associated.

Referring to the drawing and more particularly to Figure 1, there is shown a portion of a system for storing and dispensing a fluid pressure medium, comprising a plurality or a series of containers 10 for storing liquid carbon dioxide or other liquid or gaseous pressure medium. The containers 10, as illustrated herein, are cylinders adapted to contain gaseous or liquid medium under pressures up to about 2000 pounds per square inch.

Each of the containers 10 has a control head 11 attached thereto which may include suitable means (not shown) for releasing the pressure medium by puncturing a disc or opening a valve, normally adapted to close the container. These means are well known in the art to which this invention relates and, for example, may comprise a cutter member or a valve operating member and a cam or piston for actuating such members. By way of example, the control heads illustrated herein may be of the piston operated cutter type having a pipe 12 connected thereto which serves to conduct a fluid pressure medium adapted to move the piston to cause the cutter to puncture the disc sealing the container. It will be understood that the cutter may be operated by cams, levers or the like, adapted to be actuated by a pull cable, or by spring means energized for cutter actuation. Where valves are utilized for closing and opening the containers, any suitable valve operating means may be utilized.

Preferably, the container opening or pressure medium releasing means are actuated from a remote location such as an instrument or control panel, and may be operated individually, simultaneously or successively by manually or automatically operated devices or other improvements well known in this art.

The control heads 11 are each provided with an outlet 14 for the pressure medium. The outlet 14 may be operatively connected by a pipe or flexible conduit 15 to a conduit or manifold 16 for conducting the pressure medium to a point of use. For example, the manifold 16 may be connected to a fire extinguishing system, to a flotation system, to a pressure operated emergency system or to any apparatus or device adapted to be operated by a pressure medium.

In accordance with the invention, the manifold has a plurality or a series of fittings or devices 20 connected therein, corresponding in number to the number of containers 10 in the system. These fittings are adapted to visibly indicate when a container or a number of containers has been discharged into the manifold to enable an attendant to readily determine which containers are empty and must be replaced with containers filled with pressure medium. The fittings 20 may be further provided with means for shutting off communication between the manifold and the individual containers prior to or after discharge of the pressure medium from the containers, whereby any number of containers may be removed without danger of wasting the pressure medium from other containers in the event the system is operated while certain containers have been disconnected for testing or replacement.

A fitting 20 is illustrated in detail in Figures 2 and 3, and comprises a body 21 substantially in the shape of a T having a chamber 22 therein and provided with an inlet opening 24 and an outlet opening 25 at the respective side branches of the T for connecting the fitting in the manifold by threading pipes or conduits 26 of the manifold into the openings 24 and 25. The lower branch of the T has a well 27 therein which provides the lower portion of the chamber 22 and is spaced downwardly and out of the path intermediate the openings 24 and 25. The bottom of the well 27 is provided with a valve seat 29 for receiving a valve member described hereafter, and has an inlet aperture 30 to which one of the conduits 15 is adapted to be operatively connected for discharging the pressure medium from a container into the manifold.

The upper portion of the body 21 of the fitting 20 has a tapped aperture 35, preferably in alignment with the valve seat 29 and its inlet aperture 30, for receiving a bushing member 36 adapted to support the valve and indicating devices. The bushing member 36 has an externally threaded lower portion 37 for screwing it into the tapped aperture 35 of the body 21 and above the threaded portion 37 has a flange 39 adapted to overlie the body and determine the distance the bushing member can be screwed into the body. The upper portion 40 of the bushing member projects outwardly above the body of the fitting and at its exterior is provided with a hexagonal or similar contour to facilitate engagement by a wrench or other tool used for securing the bushing member to the body. The upper end of the bushing member has an annular lip 41, and the interior of the upper portion 40 of the bushing member is provided with a bore, well or chamber 42, preferably substantially cylindrical in contour.

The bore 42 provides a housing for substantially concealing or rendering an indicator inconspicuous and may be slightly enlarged at its upper end to form a shoulder 44, and may be provided with an annular groove or recess 45 adjacent its lower end adapted to cooperate with locking means associated with the indicator about to be described. The bottom 46 of the bore 42 has an aperture 47, and a tapped bore 49 may be provided in the lower portion 37 of the bushing member beneath the bottom 46 for threading therein a plug shaped member 50 having an aperture 54 in alignment with the aperture 47. The plug member 50 has a recess 51 adjacent the aperture 54 for carrying a packing or sealing gland 52.

The indicator comprises a disc 55 having a depending skirt 56 at its outer periphery adapted to extend about and enclose the lip 41 at the upper end of the bushing member. The disc 55 is attached by means of a screw 57 or the like, to the upper end of a stem or rod 59 depending downwardly in the bore 42 and extending through the apertures 47 and 54. The screw 57 also serves for attaching a substantially cylindrical or tubular cap member 60 to the upper end of the stem, which is formed of slightly resilient sheet metal or the like. The member 60 is carried by the indicator stem 59 and is adapted to telescope into and be concealed in the bore 42 of the bushing member. The member 60 is provided with a substantially cylindrical depending skirt slotted vertically at circumferentially spaced points to provide spring fingers 61 for engaging the side walls of the bore 42. Preferably, each spring finger is provided with an outwardly extending rib or projection 62 adapted to fit into the groove or recess 45 when the indicator is in its lower position (Figure 2) and abut against the shoulder 44 to retain the indicator in indicating position (Figure 3). The disc 55 and the sides of the cap member 60 may be provided with a contrasting or conspicuous color so as to serve as readily visible and noticeable indicating means when the indicator is in its upper position.

If desired, one or more of the slots in the skirt of the cap member 60 may extend only partially along the length of the skirt and may be closed at the bottom by a portion 64. The upward movement of the indicator with respect to bushing member 36 may be then limited by providing one or more screws 65 extending radially inwardly into the bore 42 and having shank portions 66 positioned in the slots and adapted to be engaged by the portions 64 at the bottom of the slots when the cap member 60 moves upwardly.

The indicator may be moved into indicating position when a pressure medium has been discharged through the manifold by operatively associating therewith a suitable piston or the like adapted to be operated in response to the pressure medium. For example, as illustrated herein, the piston may be a valve member 70 carrying a valve disc 71 adapted to engage the valve seat 29 to close the inlet aperture 30. The valve member may be operatively connected with the indicator by a stem or shank 72 of the valve member having a bore 74 in the upper portion thereof for slidably receiving a reduced portion 75 of the indicator stem or rod 59. The upper end of the stem 72 abuts a downwardly facing shoulder 76 on the stem 59 when the indicator is in its lower position (Figure 2), and is adapted to move the indicator stem upwardly when the valve member is moved upwardly by pressure medium entering the inlet aperture 30.

In order to return the valve member to cause the disc 71 to seal the aperture 30, after pressure medium discharged from the container has passed through the manifold, a cylindrical helical spring 77 is telescoped about the stem 72, having its upper end positioned against the underside of the plug 50 and having its lower end bearing against the head 79 of the valve member. The spring 77 may be suitably tensioned to yield when pressure medium is released from a container and conducted to the inlet aperture 30, and to return the valve member and the valve disc to securely seal the inlet aperture after the pressure medium

has passed into the manifold, so that pressure medium supplied by another container to the manifold will not leak through the aperture 30.

If desired, the fitting may be used to serve only as an indicator. This may be accomplished by omitting the spring 77 and integrally connecting the stems 59 and 72, whereby, after pressure medium has entered the aperture 30, the valve member and indicator are retained in their upper position.

In operation of the system, shown in Figure 1, the indicators are moved into their downward or non-indicating position, as shown in Figure 2, and the valve members are checked to make sure that the apertures 30 are securely sealed to prevent leakage of pressure from the manifold.

When the pressure medium is released from one or more containers it is conducted from the discharge outlet 14, by the conduit 15, to the respective fitting 20 of the discharging cylinder or cylinders. The pressure medium upon reaching the inlet aperture 30 is effective to move the valve member upwardly in opposition to the spring 77, as shown in broken lines in Figure 3, whereupon the pressure medium enters the chamber 22 of the fitting and is conducted to the manifold by the outlet opening 25 through which it passes to the point of use.

When the valve member 70 is moved upwardly, the upper end of its stem 72, engaging the shoulder 76, moves the indicator stem 59 upwardly, which in turn raises the indicator disc 55 and the cap member 60 into indicating position, as shown in Figure 3. The portions 66 of the screws 65 limit the upward movement of the indicator by engaging the bottom portions 64 of the slots in the cap member and thereby prevent the indicator from being separated from the bushing member 36 in the event of rapid upward movement of the valve member.

After the pressure medium has passed into the manifold, the spring 77 is effective to return the valve disc 71 into its lower or inlet sealing position as shown in Figures 2 and 3. Due to the sliding connection between the stems 59 and 72, provided by the portion 75, slidably received in the bore 74, the indicator will remain its upper or indicating position, serving to indicate that the container connected to the respective fitting has been discharged. The indicator is retained and locked against accidental displacement in this position by the projections 62 on the spring fingers 61 which now engage the shoulders 44 to prevent downward movement of the indicator (Figure 3).

After the system has operated, that is, after one or more containers have been completely discharged, it is desirable to replace the empty containers with containers charged with pressure medium. The containers are emptied rapidly once discharge thereof is effected. This takes no more than several minutes, thus assuring complete emptying of a discharged container before any attempt is made to replace the empty container. The attendant can then readily determine which of the containers has been discharged and need replacement by noting the position of their indicators. The empty containers may be disconnected from the control heads 11 without danger of opening the system. Should the system operate while containers have been detached from their control head, the pressure medium discharged into the manifold or header 16 cannot escape or be wasted because the valve members 70 securely seal the inlet apertures 30.

When the empty containers have been replaced by full containers and the latter have been attached to their control heads, the indicators are pushed downwardly into the position shown in Figure 2. Manual pressure on the disc 55 will force the projections 62 off the shoulders 44 and downwardly to fit into the recess or groove 45, which will prevent accidental upward movement of the indicator due to vibrations and shocks.

From the foregoing description it will be seen that the present invention provides an improved system for storing and dispensing a pressure medium. The invention provides a manifold or header to which a bank of containers may be operatively connected, regardless of the type or style of pressure medium releasing means provided on the containers, and regardless of the manner in which the control heads are operated. The system is therefore suitable for use with existing or newly designed equipment, and is universally adaptable for installations employing a plurality or series of containers. The fittings are relatively light in weight and are economically manufactured. The parts of the fittings are simple in construction and can be readily assembled in a minimum amount of time. They are rugged in construction and can withstand any rough usage to which they may be subjected.

While my invention resides in certain principles of construction and operation which have been illustrated and described in connection with the accompanying drawing, it will be apparent to those skilled in the art that the invention may be embodied in other forms of construction without departing in any manner from the spirit and scope of the invention, and I therefore do not wish to be strictly limited to the disclosure, but rather to the scope of the appended claims.

I claim:

1. A fitting for a system of the class described comprising a body having a fluid pressure medium receiving chamber therein provided with inlet means for admitting fluid pressure medium and a bore adjacent said chamber for housing an indicator, an indicator normally concealed in said bore and having a stem and a piston operatively connected to said stem adapted to be moved by fluid pressure medium entering said chamber to move said indicator out of said bore into indicating position, and outwardly urged spring means carried by said indicator, said bore of said body having cooperating recess means for receiving portions of said spring means to lock said indicator in indicating position.

2. A fitting for a system of the class described comprising a body having a fluid pressure medium receiving chamber therein provided with inlet means for admitting pressure medium and having a bore adjacent said chamber for housing an indicator, an indicator normally concealed in said bore and having a stem and a piston operatively connected to said stem adapted to be moved by pressure medium entering said chamber to move said indicator out of said bore into indicating position, and a substantially tubular sleeve connected to and carried by said indicator having a plurality of spring fingers provided with projections, said bore of said body having cooperating recesses for receiving the projections of said spring fingers to lock said indicator in indicating position.

3. A fitting comprising a substantially T-shaped body having a passage extending therethrough

provided with an inlet and an outlet for connecting the fitting in a conduit, and having inlet means for operatively connecting said passage with a source of fluid pressure medium; a check valve including a valve member for closing said inlet means, a valve stem for said valve member extending transversely through said passage, and spring means for normally urging said valve member into inlet means closing position; and indicating means including a member slidably disposed in said body adapted to be moved outwardly with respect to said body by said valve stem when said valve member is moved away from its inlet means closing position, means for locking said indicating means to prevent undesired movement thereof while in indicating position, and means below said locking means for locking said indicating means to prevent undesired movement thereof while in non-indicating position.

4. A fitting comprising a substantially T-shaped body having a passage extending therethrough provided with an inlet and an outlet for connecting the fitting in a conduit, and having inlet means for operatively connecting said passage with a source of fluid pressure medium; a check valve including a valve member for closing said inlet means, a valve stem for said valve member extending transversely through said passage, and spring means for normally urging said valve member into inlet means closing position; and indicating means including a member slidably disposed in said body adapted to be moved outwardly with respect to said body by said valve stem when said valve member is moved away from its inlet means closing position, said indicating means being provided with cooperating resilient means and recesses for receiving portions of said resilient means to lock said indicating means to prevent undesired movement thereof while in indicating and non-indicating positions.

5. A fitting comprising a body having a passage extending therethrough, provided with an inlet and an outlet for connecting the fitting in a conduit, and having inlet means for operatively connecting said passage with a source of fluid pressure medium, said inlet means including a valve seat; a valve member for closing said seat of said inlet means having a valve stem; spring means for normally urging said valve member into seat closing position and attached to permit said valve member to move into seat opening position and allow the fluid pressure medium to enter said passage; and indicating means normally substantially concealed in said body having a shank mounted on said valve stem in telescoping relation to permit said stem to project said indicating means outwardly of said body into indicating position when said valve member is moved into seat opening position and to permit said stem to move independently of said shank when said valve member is returned to its seat closing position.

6. A fitting comprising a body having a passage extending therethrough, providing with an inlet and an outlet for connecting the fitting in a conduit, and having inlet means for operatively connecting said passage with a source of fluid pressure medium, said inlet means including a valve seat; a valve member for closing said seat of said inlet means having a valve stem; spring means for normally urging said valve member into seat closing position and attached to permit said valve member to move into seat opening position and allow the fluid pressure medium to enter said passage; indicating means normally substantially concealed in said body having a shank mounted on said valve stem in telescoping relation to permit said stem to project said indicating means outwardly of said body into indicating position when said valve member is moved into seat opening position and to permit said stem to move independently of said shank when said valve member is returned to its seat closing position; and means for locking said indicating means in indicating position when said valve member is returned to its seat closing position.

7. A fitting comprising a body having a passage extending therethrough, provided with an inlet and an outlet for connecting the fitting in a conduit, and having inlet means for operatively connecting said passage with a source of fluid pressure medium, said inlet means including a valve seat; a valve member for closing said seat of said inlet means having a valve stem; spring means for normally urging said valve member into seat closing position and attached to permit said valve member to move into seat opening position and allow the fluid pressure medium to enter said passage; indicating means normally substantially concealed in said body having a shank mounted on said valve stem in telescoping relation to permit said stem to project said indicating means outwardly of said body into indicating position when said valve member is moved into seat opening position and to permit said stem to move independently of said shank when said valve member is returned to its seat closing position; and means for locking said indicating means in indicating position when said valve member is returned to its seat closing position, including resilient means and recess means for receiving said resilient means.

8. A fitting comprising a body having a passage extending therethrough, provided with an inlet and an outlet for connecting the fitting in a conduit, and having inlet means for operatively connecting said passage with a source of fluid pressure medium, said inlet means including a valve seat; a valve member for closing said seat of said inlet means; means for normally urging said valve member into seat closing position and adapted to permit said valve member to move into seat opening position and allow the fluid pressure medium to enter said passage; indicating means normally substantially concealed in said body, said indicating means being slidably associated with said valve member to permit said valve member to project said indicating means outwardly of said body into indicating position when said valve member is moved to seat opening position and to permit said valve member to move into seat closing position independently thereof; and means for locking said indicating means in indicating position after said valve member is again urged into seat closing position, said last means including a plurality of spring fingers carried by said indicating means and a recess in said body for receiving said fingers.

9. A fitting comprising a body having a passage extending therethrough, means at the ends of said passage for connecting the fitting in a conduit and inlet means leading into said passage for operatively connecting a container of fluid pressure medium, said body having a housing substantially opposite said inlet means, a valve member in said body adapted to close said inlet means and having a stem extending across said passage, spring means for normally urging said valve member into inlet means closing position, indicating means normally concealed in said hous-

ing, said indicating means having a stem structurally separate from and adapted to be engaged by the stem of said valve member to project said indicating means outwardly of said housing when said valve member is moved into inlet means opening position, said indicating means being unaffected solely by the flow of pressure medium through said passage, and means associated with said indicating means and said housing for locking said indicating means in outwardly projecting position.

10. A fitting comprising a body having a passage extending therethrough, provided with an inlet and an outlet for connecting the fitting in a conduit, and having inlet means leading into said passage for operatively connecting said passage with a source of fluid pressure medium, said body having a housing substantially opposite said inlet means; a valve member for closing said inlet means; spring means for normally urging said valve member into inlet means closing position and adapted to yield to pressure medium entering said inlet means to cause said valve member to move into inlet means opening position and to allow the pressure medium to enter said passage; indicating means normally substantially concealed in said housing, said indicating means being slidably associated with said valve member to permit said valve member to project said indicating means outwardly of said housing into indicating position when said valve member is moved into inlet means opening position and to permit said valve member to move into inlet means closing position independently thereof, said indicating means being unaffected solely by the flow of pressure medium through said passage; and means for retaining said indicating means in indicating position after said valve member is again urged into inlet means closing position by said spring means.

HARRY C. GRANT, JR.