(No Model.)

J. L. CALLANAN.

COPY HOLDER AND LINE INDICATOR.

No. 590,206. Patented Sept. 21, 1897.

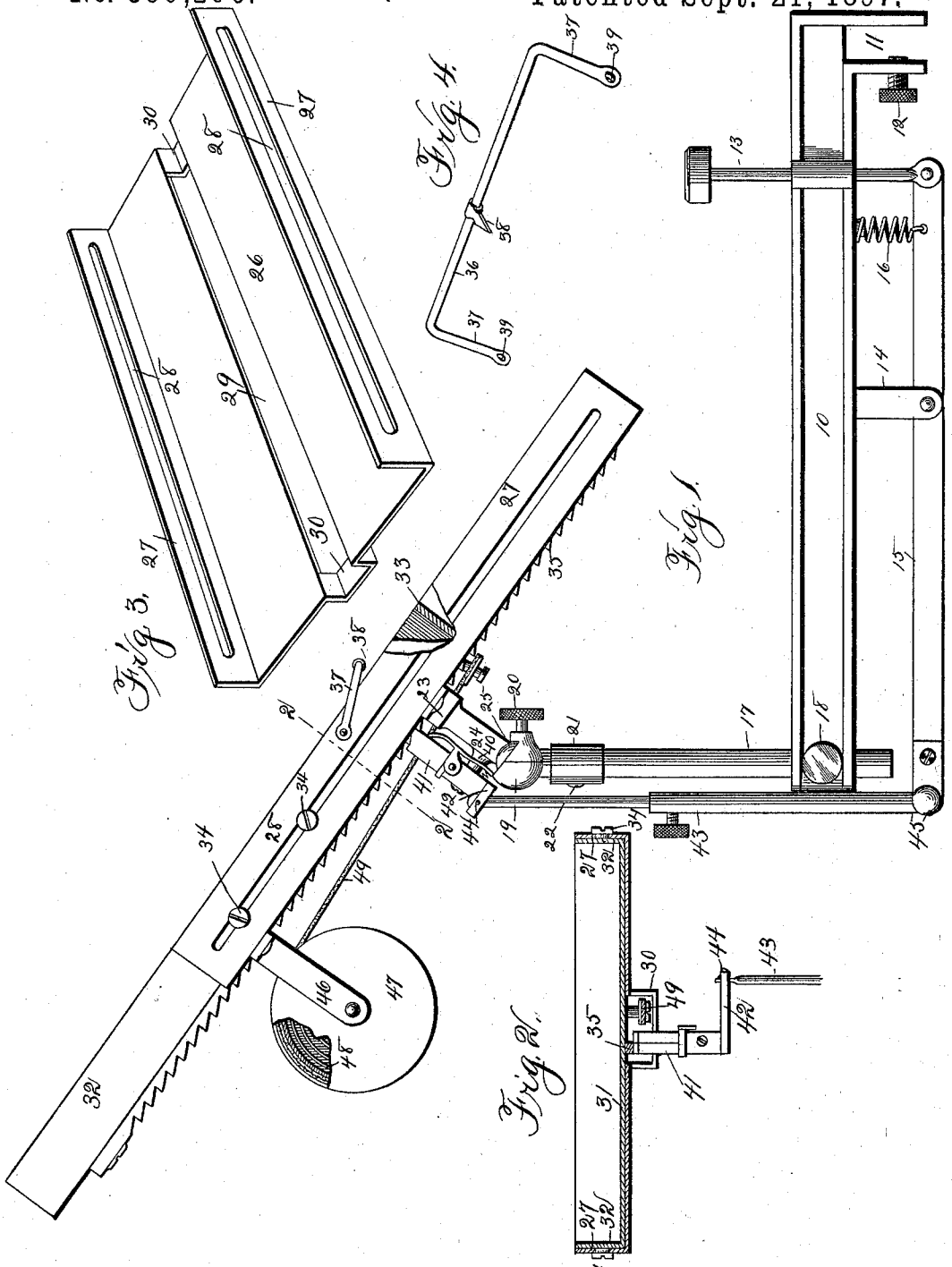

Witnesses:
R. G. Orwig.
Jas. Barels.

Inventor: James L. Callanan,
By Thomas G. and J. Ralph Orwig,
Attorneys.

THE NORRIS PETERS CO., PHOTO-LITHO., WASHINGTON, D. C.

UNITED STATES PATENT OFFICE.

JAMES L. CALLANAN, OF DES MOINES, IOWA.

COPY-HOLDER AND LINE-INDICATOR.

SPECIFICATION forming part of Letters Patent No. 590,206, dated September 21, 1897.

Application filed March 1, 1897. Serial No. 625,626. (No model.)

To all whom it may concern:

Be it known that I, JAMES L. CALLANAN, a citizen of the United States, residing at Des Moines, in the county of Polk and State of Iowa, have invented a new and useful Copy-Holder and Line-Indicator, of which the following is a specification.

The object of this invention is to provide a copy-holder of simple, cheap, strong, and durable construction that may be quickly and easily secured to the frame of a type-writer to hold a copy-book or the like in any desired position relative to the type-writer, so that the copy-book will be adapted to different positions of the operator and to different conditions of light, &c.

My object is, further, to provide a copy-holder of this kind in which the copy, or rather that portion thereof which is being used for the time being, is always found at the same position relative to the type-writer and to the operator's eyes, and further to provide simple, durable, and easily-operated means whereby the copy may be moved relative to a line-indicator as rapidly as the copy is being printed, so that should the operator stop at any point he may readily find the place on the copy where he left off by means of said indicator, all that is necessary in accomplishing this desirable result being the depression of a key located adjacent to the key of the type-writer at the end of each line on the copy.

My invention consists in certain details in the construction, arrangement, and combination of various parts of the device whereby the objects contemplated are attained, as hereinafter more fully set forth, pointed out in my claims, and illustrated in the accompanying drawings, in which—

Figure 1 shows a side elevation of the complete device, parts being broken away to show certain details of construction. Fig. 2 shows a transverse sectional view taken through the line 2 2 of Fig. 1. Fig. 3 shows a perspective view of the stationary top piece of the frame. Fig. 4 shows a detail perspective view of the line-indicator.

Referring to the accompanying drawings, the reference-numeral 10 is used to indicate a straight arm having its end bent downwardly and bifurcated at 11, it being designed to encircle or admit the side bar of a type-writer frame, a thumb-screw 12 being seated in one side of the end to engage the frame of the type-writer, and thereby support the arm 10 in a horizontal position.

The reference-numeral 13 indicates a key-bar slidingly mounted in a bearing formed on the arm 10.

14 indicates a support projecting downwardly from the arm 10 and having a lever 15 fulcrumed thereto. One end of the lever 15 is pivoted to the key-bar 13, and an extensible coiled spring 16 is attached to the arm 10 and the lever 15 to normally hold the key-bar 13 in an elevated position.

In the outer end of the arm 10 I have mounted an upright 17, arranged to move vertically therein and to be held in any position in which it is placed relative thereto by means of a thumb-screw 18. At the upper end of this upright 17 is a socket 19, and a thumb-screw 20 is seated in one part of the socket to extend to the interior thereof. A collar 21, having a screw 22 therein, serves to hold the two parts of the socket 19 together.

The reference-numeral 23 is used to indicate a plate having an arm 24 to project downwardly therefrom, and a ball 25 formed on the lower end of said arm to enter the socket 19. The hereinbefore-described set-screw 20 is designed to engage this ball 25, and thereby hold the plate 23 in any position relative to the upright 17 in which it may be placed. Fixed to the top of this plate 23 is a stationary top piece 26, preferably made of sheet metal and having upturned sides 27, each provided with a longitudinal slot 28. A longitudinal slot 29 is formed in the central portion of the bottom of this plate, and the downwardly-projecting bridges 30 connect the two sides of the plate.

The reference-numeral 31 indicates a plate in which the copy is held, having upturned sides 32 and an upturned lower end piece 33.

34 indicates screws extended through the slots 28 and into the sides 32. On the bottom of the plate 31 is a rack 35, which is projected some distance beyond the end of said plate. By this arrangement it is obvious that the upper plate may be freely moved within the

lower plate in a longitudinal direction. I have provided a line and word indicator arranged to be fixed to the stationary plate and to extend over the movable plate and the copy held thereon. This indicator comprises a bar 36, having its ends turned at right angles at 37, to be pivoted to the sides of the stationary plate.

38 indicates a word-indicator slidingly mounted on said bar 36, capable of being moved by the operator's fingers longitudinally of the line-indicator 36.

The arms 37 are provided with openings 39, through which rivets may be extended to pivotally connect them with the sides of the fixed frame.

The reference-numeral 40 indicates an arm formed on the arm 24 to project forwardly therefrom. This arm 40 serves as a support for a duplex dog 41, which is pivotally connected therewith and designed to engage the rack 35 and when moved laterally relative to the rack advance the said rack one tooth's space upon each movement. This duplex dog is of the same construction as those in common use for advancing the carriage on a type-writer, and hence a detail description thereof is deemed superfluous. An arm 42 is formed on the lower end of the fixed member of the duplex dog to project at right angles therefrom, and 43 indicates a rod connected therewith by means of a universal joint 44, and also with the forward end of the lever 15 by means of the universal joint 45. This rod is made adjustable as to length.

46 indicates a support fixed to the stationary plate near its upper end to support a casing 47, in which a convolute spring 48 is mounted.

49 indicates a strap fixed to and wound upon the exterior of the casing 47, and having its other end fixed to the lower end portion of the movable plate; these parts being so arranged as to produce a constant and yielding pressure upon the movable plate, tending to force it upwardly relative to the stationary plate. It is obvious that when the duplex dog is operated the movable plate will be moved upwardly relative to the fixed plate.

In practical use the copy-book is placed in the movable plate and beneath the line-indicator. The movable plate is then drawn to its lower limit, or until the line-indicator is adjacent to the first line on the copy. As the copy is read off the operator of the type-writer depresses the key-bar 13 as often as may be necessary to keep the copy-book in proper position relative to the line-indicator. If the distance between the line-space on the copy varies, it will only be necessary for the operator to depress the key one, two, or three times, as may be necessary, to keep the parts in their proper relative position. When the operator desires to leave the copy for a time, he may place the word-indicator on the line-indicator in a position pointing to the last word printed. Then when the printing is continued he will have no difficulty in starting at the word last printed. It is obvious that the device may be adjusted to adapt itself to any desirable position.

I do not desire to be understood as limiting myself to the particular construction, arrangement, and combination of the various parts of the device. They are, however, the best means of embodying my idea which I have as yet been able to arrange.

Having thus described my invention, what I claim as new therein, and desire to secure by Letters Patent of the United States therefor, is—

1. A copy-holder, comprising a fixed plate, means for supporting the same in proper position, a movable plate slidingly mounted thereon, a rack fixed to the movable plate, mechanism for normally elevating the movable plate relative to the fixed plate, a line-indicator on the fixed plate to overlap the movable plate, and a duplex dog or its equivalent connected with the fixed plate to engage said rack, and means for operating said duplex dog, substantially as and for the purposes stated.

2. A copy-holder, comprising an arm, means for detachably connecting the same with the type-writer frame, an upright thereon, a fixed plate, and a universal joint for connecting the plate and said upright, means for securing the plate in any position, a movable plate slidingly mounted within the fixed plate, a rack on its under surface, means secured to the fixed plate to exert a yielding pressure on the movable plate tending to force it upwardly relative to the fixed plate, a line-indicator fixed to the fixed plate to overlap the movable plate, a duplex dog connected with the fixed plate to engage the rack on the movable plate, a key-bar slidingly mounted in the aforesaid arm, a lever fulcrumed to the arm and pivoted to said key-bar, a spring connecting the said lever and said arm, and means for connecting the opposite ends of the lever with the aforesaid duplex dog, arranged and combined to operate in the manner set forth, and for the purposes stated.

3. A copy-holding attachment for a type-writer, comprising an arm, means for detachably securing same to a type-writer frame, an upright adjustably fixed to the other end of said arm, a socket at its top, a set-screw to enter said socket, a flat plate, an arm fixed to the said plate and having a ball on its lower end to enter the said socket, a line-indicator substantially as shown, pivoted to the sides of the plate, a word-indicator slidingly mounted on the said line-indicator, a tension device substantially as shown and described, fixed to the plate, a movable plate slidingly mounted on the fixed plate and designed to hold a copy-book, a rack on its under surface, a strap connecting the movable plate with the said

tension device, a key-bar slidingly mounted in the aforesaid arms, a lever fulcrumed to the aforesaid arms and connected at one end with said key-bar, a spring connected with the lever and with the arm, a duplex dog connected with the aforesaid plate and having laterally-projecting arms, and a rod for connecting the said arm with the said lever, all arranged and combined substantially in the manner set forth and for the purposes stated.

JAMES L. CALLANAN.

Witnesses:
J. RALPH ORWIG,
THOMAS G. ORWIG.