United States Patent [19]

White

[11] **3,734,348**

[45] **May 22, 1973**

[54] **METHOD OF EXPELLING LIQUID PROPELLANT FROM A STORAGE TANK IN A LIQUID ROCKET**

[75] Inventor: **Howard M. White**, Philadelphia, Pa.

[73] Assignee: **The United States of America as represented by the Secretary of the Air Force**, Washington, D.C.

[22] Filed: **Sept. 23, 1971**

[21] Appl. No.: **183,184**

[52] **U.S. Cl.**.....**222/1**, 222/54

[51] **Int. Cl.**.....**G01f 3/20**

[58] **Field of Search**.....222/1, 54, 386.5, 222/386; 244/74; 60/23

[56] **References Cited**

UNITED STATES PATENTS

3,285,470	11/1966	Frei et al.	222/54
3,435,996	4/1969	Jones	222/386.5

Primary Examiner—Stanley H. Tollberg

Attorney—Harry A. Herbert, Jr. and Arsen Tashjian

[57] **ABSTRACT**

A bellows of "55-Nitinol" metal within a liquid propellant storage tank in a liquid rocket is used to expel liquid propellant from the storage tank for use in the liquid rocket. The "55-Nitinol" bellows is deformed, while at a temperature below the transition temperature of the "55-Nitinol," from the fully expel natural and normal position to the position necessary to permit filling of the storage tank with the liquid propellant. After the storage tank has been loaded with the liquid propellant, and when it becomes necessary to use the liquid propellant, the "55-Nitinol" bellows is heated to a temperature above the transition temperature of the "55-Nitinol." As a result, the "55-Nitinol" bellows returns to the fully expel natural and normal position and, thereby, expels the liquid propellant from the storage tank for use in the liquid rocket.

2 Claims, 4 Drawing Figures

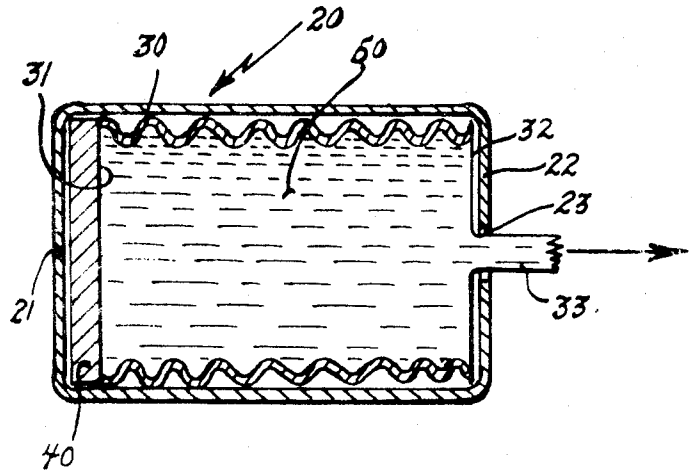

FIG. 1

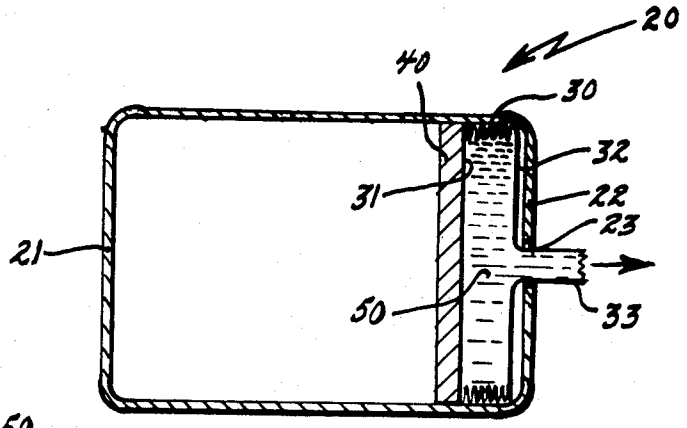

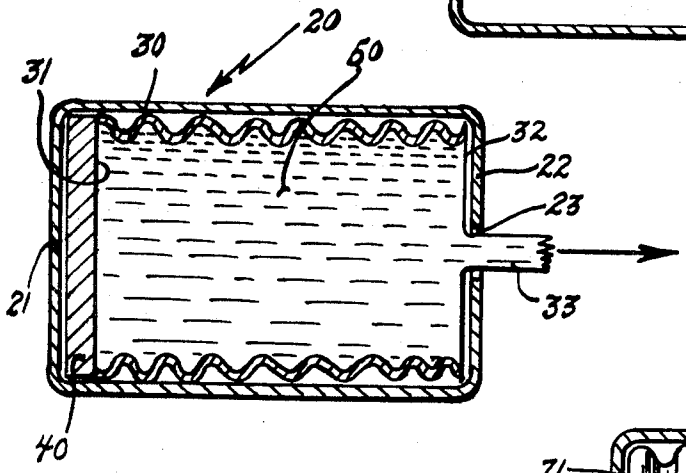

FIG. 2

FIG. 3

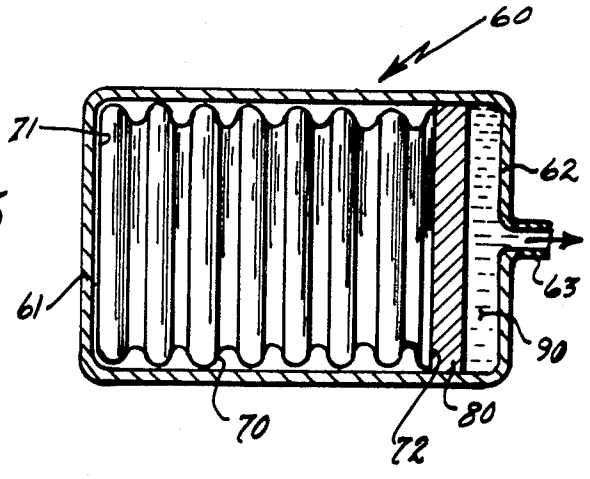

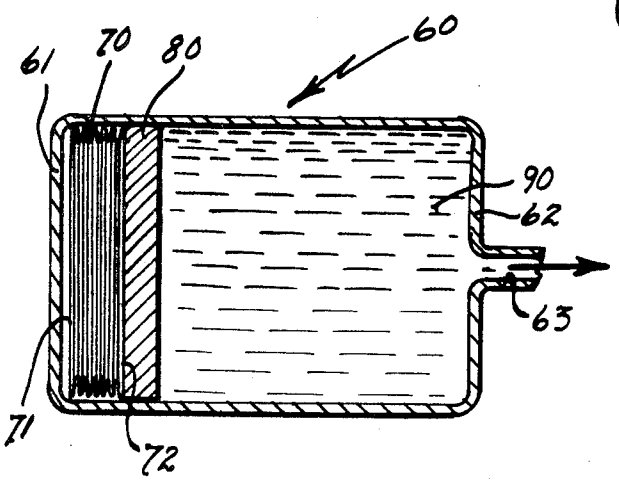

FIG. 4

INVENTOR.
HOWARD M. WHITE
BY Harry A. Herbert Jr
Arsen Tashjian
ATTORNEYS

at or above its "transition temperature." By definition, the "transition temperature" is that temperature at and above which the original natural and normal shape is restored. The "transition temperature" of "55-Nitinol" may be made to vary, since it depends, in pertinent part, on the processing history of the particular "55-Nitinol." Stated another way, the "transition temperature" of a particular article of "55-Nitinol" is known, although the "transition temperature" of different articles of "55-Nitinol" may be different. Therefore, a specific "transition temperature" of the "55-Nitinol" used in my method is not stated herein, although as previously stated the "transition temperature" of the particular "55-Nitinol" used would be known. A discussion of the reasons for the shape recovery phenomenon of "55-Nitinol" would serve no useful purpose herein and, therefore, will not be given, except to say that shape recovery of "55-Nitinol" is the result of a transition in crystal structure.

My method of expelling liquid propellant from a storage tank on, and for use by, a liquid rocket by the use of a "55-Nitinol" bellows within the storage tank, wherein the bellows is used to expel the liquid propellant from the storage tank, comprises essentially six steps.

Firstly, I position the bellows to the position necessary to expel the liquid propellant from the storage tank. With regard to the "wet" expulsion of the liquid propellant, reference is made to FIG. **1** wherein are shown: storage tank **20** with back end **21**, and front end **22** with opening **23**; "55-Nitinol" bellows **30**, wholly within storage tank **20**, with back end **31**, and front end **32** with orifice **33** which fits into and extends through storage tank opening **23**, and with the front end **32** of bellows **30** affixed to the internal surface of storage tank **20** near front end **22**; bulkhead **40**, wholly within storage tank **20** and affixed to the back end **31** of bellows **30**; and liquid propellant **50**, which is within, i.e., internal of, bellows **30**. The position of the bellows **30** in FIG. **1** is the position necessary to expel, i.e., the fully expel position, liquid propellant **50** through orifice **33** from within bellows **30** which is within storage tank **20**.

It is important to note that bellows **30**, with bulkhead **40** affixed thereto, forms a liquid-impervious container which is closed at one end, i.e., back end **31**, and is open at orifice **33** at the other end, i.e., front end **32**.

With regard to the "dry" expulsion of the liquid propellant, reference is made to FIG. **3**, wherein are shown: storage tank **60** with back end **61** and, and front end **62** with orifice **63**; "55-Nitinol" bellows **70**, wholly within storage tank **60**, with back end **71** and front end **72**, and with back end **71** affixed to the internal surface of storage tank **60** at back end **61**; bulkhead **80**, wholly within storage tank **60** and affixed to front end **72** of bellows **70**; and liquid propellant **90** which is wholly outside of, i.e., external of, bellows **70**. The position of bellows **70** in FIG. **3** is the position necessary to expel, i.e., the fully expel position, liquid propellant **90** through orifice **63** from storage tank **60**.

It is important to note that bellows **70**, with bulkhead **80** affixed to front end **72**, and with back end **71** affixed to the internal surface of storage tank **60** at back end **61**, forms a liquid-impervious unit which is closed at both ends.

This first step of my method is performed both as to the "wet" expulsion and as to the "dry" expulsion, prior to launch of the rocket. In addition, during the performance of this step of my method, there is not any liquid propellant, respectively, in either bellows **30**, FIG. **1**, or storage tank **60**, FIG. **3**. Some liquid propellant is shown in FIGS. **1** and **3** as a matter of convenience, and in the interest of brevity, in explaining at a later time herein another step in my inventive method.

Then, I subject the bellows of "55-Nitinol" (**30**, FIG. **1**; **40**, FIG. **3**), while in the position and condition or shape shown in FIGS. **1** and **3**, to a temperature above the transition temperature of the "55-Nitinol" of which the bellows is made. This position and shape becomes the natural or normal position and shape of the bellows; and, the bellows will return to this position and shape, after deformation, whenever subjected again to a temperature above the transition Temperature of the "55-Nitinol" of which the bellows is made. More specifically, it is important to note that the position and shape of bellows **30**, as shown in FIG. **1**, is now its normal or natural position and shape, i.e., neither expanded nor compressed, and that the bellows **30** normally remains in that position and shape. Similarly, the position and shape of bellows **70**, as shown in FIG. **3**, is also now its normal or natural position and shape, i.e., neither expanded nor compressed, and that the bellows **70** normally remains in that position and shape. This step is also performed, both as to the "wet" expulsion and as to the "dry" expulsion, prior to launch of the rocket. In addition, during the performance of this step there is not any liquid propellant, respectively, either in bellows **30**, FIG. **1**, or storage tank **60**, FIG. **3**.

Then, while the "55-Nitinol" bellows (**30**, FIG. **1**; **70**, FIG. **3**) is being subjected to a temperature below the transition temperature of the "55-Nitinol", I deform the "55-Nitinol" bellows in a plastic sense, and not in an elastic sense, to the position necessary to permit the filling, i.e., the loading, of the storage tank with liquid propellant. With regard to the "wet" expulsion of the liquid propellant, reference is made to FIG. **2**, wherein the same components as are shown in FIG. **1** have the same reference numerals in FIG. **2**. With reference to FIG. **2**, "55-Nitinol" bellows **30** has been expanded, within storage tank **20**, rearwardly beyond its normal expanded position, i.e., it has been deformed. Bellows **30**, therefore, does not tend to return, i.e., contract to its normal position as shown in FIG. **1**. Also shown in FIG. **2** is the relative rearward displacement of bulkhead **40**. With regard to the "dry" expulsion of the liquid propellant, reference is made to FIG. **4**, wherein the same components as are shown in FIG. **3** have the same reference numerals in FIG. **4**. With reference to FIG. **4**, "55-Nitinol" bellows **70** has been compressed, within storage tank **60**, rearwardly beyond its normal compressed or contracted position, i.e., it has been deformed. Bellows **70**, therefore, does not tend to return, i. e., expand to its normal position as shown in FIG. **3**. Also shown in FIG. **4** is the relative rearward displacement of bulkhead **80**. This step is performed both as to the "wet" expulsion and as to the "dry" expulsion, prior to launch of the rocket. In addition, during the performance of this step of my method, there is not any liquid propellant, respectively, in either deformed bellows **30**, FIG. **2**, or storage tank **60**, FIG. **4**. Liquid propellant is shown in FIGS. **2** and **4** as a matter of convenience and, in the interest of brevity, in explaining at

METHOD OF EXPELLING LIQUID PROPELLANT FROM A STORAGE TANK IN A LIQUID ROCKET

BACKGROUND OF THE INVENTION

This invention relates to a novel method of expelling a liquid propellant from a storage tank in a liquid rocket for use therein.

Bellows are presently used to expel liquid propellant from storage tanks in liquid rockets for use by the liquid rocket. These bellows are actuated, and the liquid propellant is expelled thereby, by air or some other gas, stored or generated aboard the liquid rocket, which is injected or otherwise introduced into the liquid propellant storage tank, causing a pressurized flow of the liquid propellant to the combustion chamber of the liquid rocket. The storage of gas requires gas storage bottles or the like, and generated gas requires gas generators, aboard the rocket. The gas storage bottles, and the gas generators, add weight and complexity to the rocket. The added weight results in an undesired geometric increase of the thrust required to propel the rocket. The added complexity undesirably increases the probability of the unreliability of the rocket as a whole. In addition, the gas storage bottles and the gas generators add to the cost of the rocket.

Therefore, there is a current critical need for a method of expelling liquid propellant from the storage tank without having to have, aboard the liquid rocket, gas generators or bottles or other containers of stored gas. I have invented such a method and have, thereby, significantly advanced the state-of-the-art.

SUMMARY OF THE INVENTION

This invention pertains to a novel method of expelling liquid propellant from a storage tank aboard a liquid rocket for use by said rocket.

An object of this invention is to provide an efficient and reliable method of expelling liquid propellant from a storage tank aboard a liquid rocket.

Another object of this invention is to provide a simple and economical method of expelling liquid propellant from a storage tank aboard a liquid rocket, thereby eliminating the complexity and reducing the cost of one part of the present state-of-the-art propellant feed systems.

Still another object of this invention is to provide a novel method of expelling liquid propellant, from a storage tank aboard a liquid rocket, with a bellows but without the use of on-board gas storage bottles and gas generators, thereby resulting in significant saving in weight over the present state-of-the-art propellant feed systems.

These objects, and other equally important and related ones, of this invention will become readily apparent after a consideration of my inventive method and reference to the drawings.

DESCRIPTION OF THE DRAWINGS

FIGS. 1 and 2 are side elevation views, in cross-section and in simplified schematic form, of the relative position of the storage tank, the bellows, and the liquid propellant during different steps of my method, as it applies to "wet" expulsion of the liquid propellant; and,

FIGS. 3 and 4 are side elevation views, in cross-section and in simplified schematic form, of the relative position of the storage tank, the bellows, and the liquid propellant during different steps of my method, as it applies to "dry" expulsion of the liquid propellant.

DESCRIPTION OF THE METHOD

My inventive method can be better appreciated and understood if the following preliminary matters are noted and remembered.

Firstly, the term "liquid propellant" is intended, as a matter of simplicity, to be synonymous and interchangeable with, "liquid fuel" or "liquid oxidizer." As is known, a liquid rocket uses both a liquid fuel and an oxidizer, in liquid form; and, a description of my method as it applies to the expulsion of the liquid fuel from the fuel storage tank and of the liquid oxidizer from the oxidizer storage tank would only be duplicitous and would serve no useful purpose. Therefore, my method will be described solely as it applies generically to the expulsion of a liquid propellant from a storage tank which is part of a liquid propellant feed system of and on a liquid rocket.

Secondly, although reference has been made, and will be made, of the use of my method in the liquid rocket art, it is obvious that this is but one specific application of my method, by way of illustration only, and is not intended to be a limitation. For example, my method may be used to expel the liquid oxidizer in, and for use by a hybrid rocket, i.e., one where the fuel is a solid. Additionally, my method may be used, or may be adapted for use, with regard to the expulsion of any liquid from any storage tank or other container.

Thirdly, the term "expel" and its derivatives is intended to mean "to force out," "to cause the flow," and the like.

Fourthly, the phraseology "wet" expulsion (or "wet" positive expulsion) and "dry" expulsion (or "dry" positive expulsion) will be discussed and more fully explained hereinafter. However, it is to be noted at this time that "wet" expulsion is with reference to the condition where the liquid propellant is stored within the bellows which is within the propellant storage tank, and that "dry" expulsion is with reference to the condition where the liquid propellant is stored external of the bellows, but within the propellant storage tank.

Fifthly, the term "deformed" when used with reference to the bellows is intended to mean a plastic, not merely an elastic, change in shape.

Sixthly, the term or name "Nitinol" is an art-accepted acronym (i.e., nickel-titanium, Naval Ordnance Laboratory) for a series of novel structural alloys of nickel and titanium which, as far as is known by the applicant, are disclosed and claimed in the U. S. Pat. to Buehler et al., No. 3,174,851, issued on Mar. 23, 1965. "55-Nitinol" is the art-accepted designation of "Nitinol" which contains 55 percent of nickel by weight and 45 percent of titanium by weight. "55-Nitinol" is known as the metal with a memory in that it exhibits a unique "mechanical memory" effect by returning to its original natural and normal shape and dimensions after having been plastically deformed out of shape. By natural and normal shape and dimensions is meant the position and condition in which the article "55-Nitinol" is set while being subjected to a temperature at or above the "transition temperature." More specifically, if an article of "55-Nitinol" is deformed while at a temperature below what is known as its "transition temperature," it will return to its original natural and normal shape and dimensions if it is subjected to a temperature

a later time herein another step of my inventive method.

Then while the bellows is deformed (**30**, FIG. **2**; **70**, FIG. **4**) I fill, i.e., load the storage tank with liquid propellant. With regard to the "wet" expulsion of the liquid propellant and with reference to FIG. **2**, I fill the deformed expanded bellows **30** which is wholly within storage tank **20** and occupies its entire interior with liquid propellant **50**. I, therefore, in a loose linguistic sense and broadly speaking, fill the storage tank **20** with the liquid propellant **50**. With regard to the "dry" expulsion of the liquid propellant, and with reference to FIG. **4**, I fill storage tank **60** with liquid propellant **90**. The filling of the deformed bellows **30**, FIG. **2** (in storage tank **20**, FIG. **2**) and of storage tank **60**, FIG. **4**, is performed by conventional means through a suitable inlet, such as **33**, FIG. **2**, and **63**, FIG. **4**, prior to launch of the rocket. In essence, then, FIG. **2** shows the relative position of the components and of the liquid propellant during the fully loaded condition of "wet" expulsion. Likewise, FIG. **4** shows the relative position of the components and of the liquid propellant during the fully loaded condition of "dry" expulsion.

Then I subject the deformed "55-Nitinol" bellows (**30**, FIG. **2**; **70**, FIG. **4**) to a temperature above the transition temperature of the "55-Nitinol." Because of the phenomenon and property of "mechanical memory" of "55-Nitinol," which has already been discussed, the deformed "55-Nitinol" bellows (**30**, FIG. **2**; **70**, FIG. **4**) returns to its natural or normal position and shape, i.e., the position it had, and the condition or shape it was in, prior to when the "55-Nitinol" bellows was subjected to a temperature below the transition temperature of the "55-Nitinol." More specifically, and with reference to the "wet" expulsion of the liquid propellant deformed expanded bellows **30**, FIG. **2**, contracts and returns to its natural or normal position and shape shown in FIG. **1** and, thereby, expels liquid propellant **50**, FIGS. **1** and **2**, from bellows **30** and storage tank **20**, FIGS. **1** and **2**, through orifice **33**, FIGS. **1** and **2**. With reference to the "dry" expulsion of the liquid propellant, deformed compressed bellows **70**, FIG. **4**, expands and returns to its natural or normal position and shape shown in FIG. **3**, and thereby expels liquid propellant **90**, FIGS. **3** and **4** from storage tank **60**, FIGS. **3** and **4**, through orifice **63**, FIGS. **3** and **4**. This step is performed at launch time of the rocket. However, it may be adapted to be performed by known conventional means, such as a command signal from a ground-based station, while the rocket is already in flight. Additionally, it is to be understood, of course, that orifice **33**, FIGS. **1** and **2** and orifice **63**, FIGS. **2** and **4** are connected, respectively, to an appropriate liquid propellant feed system (not shown) of and on the liquid rocket, which system may include but is not limited to valves, regulators, delivery tubes and injectors which will insure the flow of the liquid propellant (**50**, FIG. **2**; **90**, FIG. **4**) to the combustion chamber of the liquid rocket. Further, the heating of the "55-Nitinol" bellows to a temperature above the transition temperature of the "55-Nitinol" may be by any known conventional means, such as on-board electric resistance heating or hot gas drawn from the combustion of the liquid rocket propellants.

While there have been shown and described the fundamental features, and steps, of my inventive method, as applied to a method of expelling liquid propellant from a storage tank in a liquid propellant feed system of and on a liquid rocket, it is to be understood that various substitutions, omissions and adaptations of my inventive method may be made by those of ordinary skill in the art without departing from the spirit of the invention.

What is claimed is:

1. A method of expelling liquid propellant from a storage tank which is part of a liquid propellant feed system of, and on, a liquid rocket for use of the liquid propellant by the rocket, wherein a close-ended bellows of "55-Nitinol" metal, which is wholly within the storage tank, is used to expel the liquid propellant, comprising the steps of:

a. positioning the bellows to the position necessary to expel the liquid propellant from the storage tank;

b. subjecting the bellows, while in the expel position, to a temperature above the transition temperature of the "55-Nitinol" metal of which the bellows is made;

c. subjecting the bellows to a temperature below the transition temperature of the "55-Nitinol" metal of which the bellows is made;

d. deforming the bellows, while at a temperature below the transition temperature of the "55-Nitinol" metal of which the bellows is made, to the position necessary to permit the loading of the storage tank with the liquid propellant;

e. loading the storage tank with the liquid propellant;

f. and, subjecting the deformed bellows to a temperature above the transition temperature of the "55-Nitinol" metal of which the bellows is made;

whereby the bellows of "55-Nitinol" metal returns to the position necessary to expel the liquid propellant from the storage tank and the liquid propellant is, thereby, expelled from the storage tank for use by the liquid rocket.

2. A method of expelling liquid propellant from within a storage tank which is part of a liquid propellant feed system of, and on, a liquid rocket for use of the liquid propellant by the rocket, wherein a bellows of "55-Nitrinol" metal, which is open at one end and which is wholly within the storage tank, is used to store and to expel the liquid propellant, comprising the steps of:

a. positioning the bellows to the position necessary to expel the liquid propellant from the bellows and from the storage tank;

b. subjecting the bellows, while in the expel position, to a temperature above the transition temperature of the "55-Nitinol" metal of which the bellows is made;

c. subjecting the bellows to a temperature below the transition temperature of the "55-Nitinol" metal of which the bellows is made;

d. deforming the bellows, while at a temperature below the transition temperature of the "55-Nitinol" metal of which the bellows is made, to the position necessary to permit the loading of the bellows within the storage tank with the liquid propellant;

e. loading the deformed bellows within the storage tank with the liquid propellant;

f. and, subjecting the loaded, deformed bellows to a temperature above the transition temperature of the "55-Nitinol" metal of which the bellows is made;

whereby the bellows of "55-Nitinol" metal returns to the position necessary to expel the liquid propellant from the bellows and from the storage tank, and the liquid propellant is, thereby expelled from the bellows and from the storage tank for use by the liquid rocket.

* * * * *