Sept. 3, 1940. J. B. HAEBERLIN, JR 2,213,521

REAGENT SIPHON

Filed June 21, 1938

Fig.1.

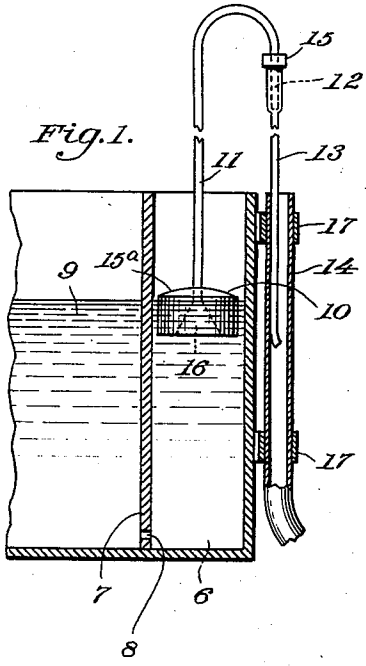

Fig.2.

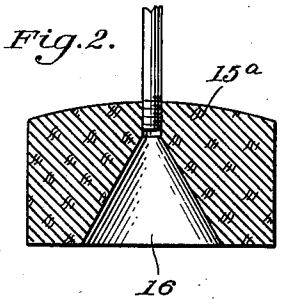

Fig.3.

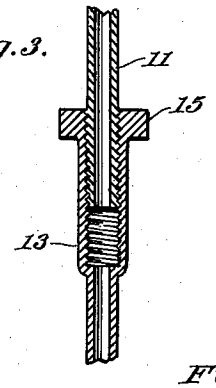

Fig.4.

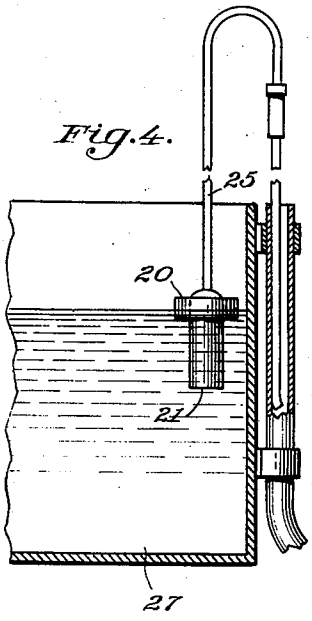

Fig.6.

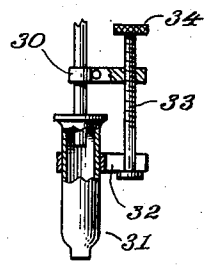

Fig.5.

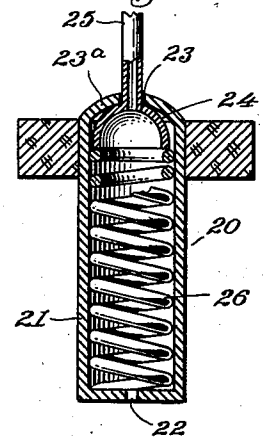

JOHN B. HAEBERLIN, JR
INVENTOR

BY Victor J. Evans & Co.

ATTORNEYS

Patented Sept. 3, 1940

2,213,521

UNITED STATES PATENT OFFICE

2,213,521

REAGENT SIPHON

John B. Haeberlin, Jr., Hillside, Ariz.

Application June 21, 1938, Serial No. 215,040

2 Claims. (Cl. 137—20)

My invention relates to feeders for liquids and it is one of the principal objects thereof to provide a feeder capable of automatically and constantly delivering a reagent at a desired and predetermined rate of flow.

Another object of my invention is to provide a device of the above described character equipped with means for effecting the flow of the reagent therethrough.

A further object of my invention is to provide a device of the above described character which is simple in construction, durable in use, efficient in operation and economical in manufacturing.

Other objects and advantages will be apparent from the following description, appended claims and annexed drawing.

Referring to the drawing wherein like reference characters designate like parts throughout the several views:

Figure 1 is a side elevation of my invention, partly in section illustrating the same in operating position on a tank, or other suitable container.

Figure 2 is a longitudinal sectional view of the float employed in my device.

Figure 3 is a longitudinal sectional view of the adjusting means for governing the flow through the siphon tube.

Figure 4 is a modified form of my invention.

Figure 5 is a longitudinal sectional view through the modified form of float illustrating the same equipped with a starting device.

Figure 6 is a modified form of flow adjusting means, the same being illustrated partly in side elevation and partly in section.

In practicing my invention, I employ a tank a portion of which is illustrated in Figure 1 of the drawing and equipped with an end chamber 6 formed by a transversely extending partition 7 provided with a communicating aperture adjacent the bottom thereof as indicated at 8. Supported on a body of liquid 9, within the tank, including said chamber 6, is a float 10 secured to the lower end of an upwardly extending siphon tube 11, the upper end of said tube being fashioned with a gooseneck terminating in a downwardly extending section 12. The lower end of the section 12 is threaded and has adjustably mounted thereon an enlarged threaded end of a downwardly extending pipe 13 extending into a conduit 14 the lower end of which communicates with a receptacle (not shown) or the like. The enlarged end of the pipe 13 is fashioned with a nut finger piece 15 to facilitate adjustment of the pipe relative to the end 12 of the tube whereby to govern the flow of liquid therethrough, it being understood that the gooseneck is spaced a sufficient distance above the top of the tank when the device is initially operated to permit the float to be actuated downwardly in proximity to the bottom of the chamber 6 without the gooseneck engaging the top of the tank and interfering with the operation thereof.

The float 10 is of a cylindrical structure in plan and fashioned with a convex upper face 15a whereby to prevent liquid gathering thereon and serving as a weight to actuate said float downwardly. Said float 10 is formed with a conical shaped bore 16, the apex of which is located adjacent the face 15a and in communication with the tube 11 as clearly illustrated in Figure 2 of the drawing. The conduit 14 is securely attached to the end of the tank by means of straps 17 or the like and the pipe 13 is loosely slidable within said conduit upon movement of the float 10.

In operation, the float is positioned within the chamber 6 and supported therein by the liquid and the pipe 13 is positioned within the conduit 14. When the parts are thus positioned, the float is forced downwardly in a manner to force the liquid upwardly through the bore 16 and into the tube 11 thereby initiating the siphoning of the liquid from the chamber 6 into the conduit 14. When the float is released, the same will float to the top of the liquid and the siphoning of the liquid continue.

The degree of flow through the tube 11 may be controlled by adjusting the pipe 13 relative to the end 12 through the medium of the nut 15 to either increase the distance between the gooseneck and the lower end of the pipe 13 or decrease the same. The foregoing description and operation of the device is that of the preferred embodiment illustrated in Figures 1 to 3 inclusive.

In the modified form illustrated in Figures 4 and 5, the float 20 is provided with a centrally disposed and subjacently extending liquid container 21 having a closed lower end fashioned with an aperture 22 whereby liquid from the tank may bleed therethrough into the container. The container is also fashioned with a closed top 23a provided with an opening 23 for slidably receiving therethrough the lower end 24 of the siphon tube 25. The lower end 24 of the tube is of an inverted bowl configuration for engagement with the upper end of a coiled spring 26 positioned within the container. The lower end of said spring engages the bottom of said container and said spring functions to maintain

the lower end 24 normally in engagement with the top 23. In order to siphon liquid from the tank, the float is positioned within the liquid and liquid allowed to bleed into the container to fill the same. When the container is thus filled, the container is grasped with the fingers and held stationary and the tube moved downwardly therein against the tension of the spring 28 thereby causing the liquid within the container to be forced upwardly through the bowl shaped end into the tube in the same manner as in the preferred embodiment. It is also to be noted, in the modified form illustrated in Figures 4 and 5, that the tank 27 is not provided with the partition as in the instance of the device illustrated in Figure 1, the weight of the container serving to maintain the float 29 in a substantially vertical position as illustrated in Figure 4.

In instances where a glass siphon tube is employed and connected to a discharge pipe, I provide an adjusting means as illustrated in Figure 6 and which comprises a laterally extending bracket 30 secured to the upper end of the siphon tube above the upper end of the discharge pipe 31 and said discharge pipe, is enlarged at said upper end and provided with a laterally extending bracket 32. The bracket 31 is fashioned with a downwardly extending threaded shaft 33, the lower end of which is loosely journaled in the bracket 32 and provided with a head engaging the under face of said bracket. The upper end of said shaft 33 is fashioned with a sum of finger nuts 34 whereby upon adjustment thereof the shaft is threaded downwardly or upwardly through the bracket 30 to lower or raise the bracket 32 and the conduit 31.

From the foregoing, it will be apparent that I have provided a simple and efficient device whereby reagents may be quickly and efficiently siphoned from a tank or other container together with means for regulating the flow of said reagent.

What is claimed is:

1. A device of the character described, comprising, a container having a top wall and a bottom wall provided with a bleed opening, a siphon tube slidably extending through said top wall and having an inverted bowl-shaped end slidable within said container, a float connected to said container adjacent said top wall and adapted to support said container in suspended condition in liquid within a tank whereby to permit said liquid to bleed into said container, a spring within said container and engaging said inverted bowl-shaped end and said bottom wall for normally maintaining said inverted bowl-shaped end disposed against said top wall and responsive to pressure of said inverted bowl-shaped end by said tube when actuated towards said bottom wall whereby liquid within said container is forced upwardly through said tube for discharge without said tank.

2. A reagent siphon having an elongated cylindrical-shaped container fashioned with an arciform top wall and a bottom wall provided with a bleed opening, an inverted cotyliform member slidably mounted within said container and having its tube slidably extending through said top wall, a float carried by said container subjacent said top wall and adapted to support said container in suspended condition in liquid within a receptacle whereby to permit said liquid to bleed into said container through said bleed opening, a coil spring disposed within said container and engaging said member and said bottom wall for normally maintaining said member seated against said top wall and responsive to pressure exerted on said member from without said container to yieldingly permit movement of said member towards said bottom wall whereby liquid within said container is forced upwardly through said member for discharge without said receptacle.

JOHN B. HAEBERLIN, JR.