H. KIRTLEY.

ELECTRIC SWITCH.

APPLICATION FILED JAN. 3, 1921.

1,412,354. Patented Apr. 11, 1922.

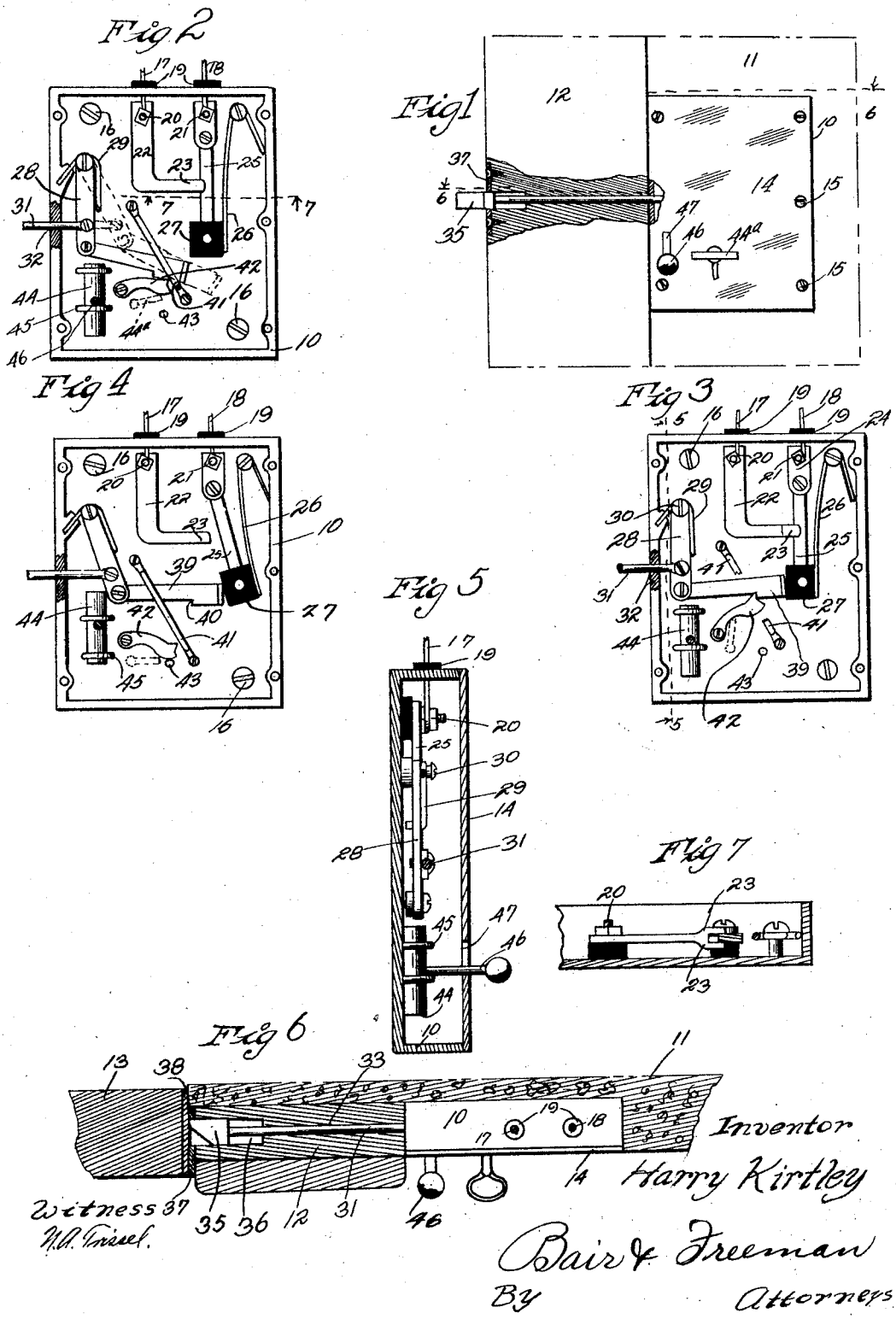

Witness
N.A. Trissel.

Inventor
Harry Kirtley

By Bair & Freeman
Attorneys

UNITED STATES PATENT OFFICE.

HARRY KIRTLEY, OF MELCHER, IOWA.

ELECTRIC SWITCH.

1,412,354. Specification of Letters Patent. Patented Apr. 11, 1922.

Application filed January 3, 1921. Serial No. 434,595.

To all whom it may concern:

Be it known that I, HARRY KIRTLEY, a citizen of the United States, residing at Melcher, in the county of Marion and State of Iowa, have invented a certain new and useful Electric Switch, of which the following is a specification.

The object of my invention is to provide an electric switch adapted to be operated by the opening and closing of an ordinary door, the switch being of simple construction, very durable and comparatively cheap.

More particularly my invention relates to a device for making and breaking an electric circuit, which is designed to be operated by the opening and closing of a door adjacent to the switch.

Still another object is to provide in such a device means for locking the switch in position where the circuit will be held broken.

Still another object is to provide in such a device means whereby the opening and closing of the door will not effect the circuit.

With these and other objects in view, my invention consists in the construction, arrangement and combination of the various parts of my device, whereby the objects contemplated are attained, as hereinafter more fully set forth, pointed out in my claims, and illustrated in the accompanying drawings in which:

Figure 1 is a front elevation of my switch installed adjacent to a door casing, parts being shown in section to better illustrate the construction.

Figure 2 is a front elevation of the switch with the front plate removed therefrom.

Figure 3 is a front elevation showing the switch in another of its positions.

Figure 4 is a front elevation showing the switch in another of its positions.

Figure 5 is a central, sectional view taken on the line 5—5 of Figure 3.

Figure 6 is a horizontal, sectional view taken on the line 6—6 of Figure 1; and

Figure 7 is a detail, sectional view taken on the line 7—7 of Figure 2.

In the accompanying drawings I have used the reference numeral 10 to indicate an ordinary switch casing which is suitably mounted in the wall 11. The wall 11 is provided with the door casing 12. A portion of a door 13 is shown in Figure 6 of the drawings in section.

The casing 10 is provided with a front removable cover plate 14 which is held in position by the screws 15. The casing 10 is held to the wall 11 by means of the screws 16.

Electric wires 17 and 18 extend through insulated bushings 19 into the casing 10. Fixed in the casing 10 are the pair of binding posts 20 and 21 to which are fastened the wires 17 and 18 respectively. The binding posts 20 and 21 are insulated from the casing 10.

Fixed to the binding post 20 is the L-shaped arm or contact member 22 which has its extreme lower edge slit as at 23. The purpose of which will be hereafter more fully set forth.

A short link 24 is fixed to the binding post 21 and has pivoted to its lower end a swinging arm or contact member 25. The contact member 25 is received between the slit ends 23 of the member 22, and completes the electrical circuit.

A spring member 26 is provided for yieldingly holding the contact member 25 in engagement with the contact member 22. The lower end of the contact member 25 is provided with an insulated block 27 against which the lower end of the spring 26 rests.

A link 28 is pivoted in the casing 10 and has a spring 29 extended around its upper end for yieldingly holding it at one limit of its movement. The link 28 is pivoted at 30.

A bolt device 31 is pivotally fixed to the link 28 intermediate of its ends and extends through an opening 32 in the wall of the casing 10. The bolt device 31 extends through an opening 33 formed in the door casing 12.

The outer or free end of the bolt device 31 is provided with a cam member 35. The door casing 12 is provided with an opening 36 to receive the cam member 35 when in one of its positions.

A plate 37 is set in a recess in the door casing 12 and forms a guide for the cam member 35. The door 13 is provided with a plate 38 against which the cam member strikes, thus preventing any wear upon the wooden door.

From the construction of the parts just described it will be seen that the spring 29 will yieldingly hold the cam member projected out beyond the edge of the door casing 12 when the door is open. But when the door is closed the striking of the door

against the cam member 35 will cause the bolt device 31 to be moved inwardly against the action of the spring 29.

Pivotally fixed to the lower end of the link 28 is the arm 39. The arm 39 is provided with a notch 40 in its lower edge. A guide member 41 is fixed to the casing 10 and extends over the arm 39 so that the arm 39 is free to swing in the guide 41.

A pawl 42 is pivoted to the casing and is designed when in one position to co-act with the notch 40 in the arm 39 for holding it in its raised position substantially as is illustrated in Figure 3 of the drawings. When in this position the free end of the arm 39 will abut against the insulated block 27 on the contact member 25.

A stop 43 limits the downward movement of the pawl 42.

In order to raise the pawl from the position shown in Figures 2 and 4 of the drawings to position where it will engage the notch 40 I use a key 44^a which extends through an opening in the cover plate 14.

The key when it is rotated will strike against the pawl 42 as illustrated in dotted lines in Figures 2, 3 and 4 and cause the pawl to be raised until the pawl engages the notch 40 and becomes locked thereby.

The movement of the pawl 42 and engagement of the notch 40 may be accomplished only when the cam 35 extends out beyond the edge of the door casing 12. That is when the contact members 22 and 25 are in engagement with each other.

It will be seen that when the arm 39 is raised or placed in the position where it will abut against the insulated block 27 that the circuit is not affected thereby. But when the door 13 is closed it causes the bolt device 31 to be moved inwardly thus moving the arm 39 inwardly and causing the contact members 22 and 25 to become disengaged for breaking the circuit.

When the arm 39 has been moved to cause the circuit to become broken the pawl 42 will drop down to its normal position.

When the door is again opened the bolt device 31 will be moved outwardly permitting the contact members to again become engaged for completing a circuit.

The arm 39 will then drop downwardly so that its upper edge will be below the lower edge of the insulated block 27. The opening and closing of the door when in this position will not effect the contact members. The moving of the arm 39 to the position shown in dotted lines in Figure 2 will not cause the insulated block 27 to become engaged.

It will thus be seen that if the contact members are in engagement that in order to cause them to become disengaged it is necessary to have the pawl 42 in engagement with the notch 40.

When it is desired to permanently lock the contact members out of engagement I have provided a stop device 44 which is slidably mounted in the guide members 45. An arm 46 which has a head on its outer end extends through a slot 47 in the cover plate 14.

When it is desired to permanently lock the contact members out of engagement the parts are first moved to the position shown in Figure 3 of the drawings, then the moving of the bolt device 31 inwardly will cause the contact members to become disengaged for permitting the stop device 44 to be moved upwardly so that it rests against the link 28 and prevents the spring 29 from returning it to its normal position.

It will be seen that I have provided a device so adapted that when the door is closed the electric circuit will be broken, but upon the opening of the door the circuit will be completed and after once completed the opening and closing of the door will not effect the circuit, until the key 44^a is again used to move the pawl 42 into engagment with the notch 40.

It will also be seen that I am able to lock the contact members in position permanently where no complete circuit will be had.

By setting the device the door may be closed in the evening and the light will then be put out by the act of closing the door and upon returning to the house, the mere opening of the door will cause the circuit to be completed and the lights lit.

Changes may be made in the construction and arrangement of the parts of my machine without departing from the real spirit and purpose of my invention, and it is my intention to cover by my claims, any modified forms of structure or use of mechanical equivalents, which may be reasonably included within their scope.

I claim as my invention:

1. In a device of the class described including a pair of contact members yieldingly held in engagement, a link pivoted at one end, an arm pivoted to its other end and adapted when in one position to throw said contact members out of engagement with each other, a bolt device fixed to said link whereby movement of the bolt device will impart movement to the link and a key actuated pawl for holding said arm in position where movement of the bolt device will cause the contact members to be disengaged.

2. In a device of the class described including a pair of contact members yieldingly held in engagement, a link pivoted at one end, an arm pivoted to its other end and adapted when in one position to throw said contact members out of engagement with each other, a bolt device fixed to said link whereby movement of the bolt device will impart movement to the link and a key ac-

tuated pawl for holding said arm in position where movement of the bolt device will cause the contact members to be disengaged, and means for locking said bolt against movement for holding the contact members disengaged.

3. In a device of the class described including a pair of contact members yieldingly held in engagement, a link pivoted at one end, an arm pivoted to its other end and adapted when in one position to throw said contact members out of engagement with each other, means for yieldingly holding said link in one of its positions, a bolt device fixed to said link whereby movement of the bolt device will impart movement to the link and a key actuated pawl for holding said arm in position where movement of the bolt device will cause the contact members to be disengaged.

4. In a device of the class described including a pair of contact members yieldingly held in engagement, a link pivoted at one end, an arm pivoted to its other end and adapted when in one position to throw said contact members out of engagement with each other, a bolt device fixed to said link whereby movement of the bolt device will impart movement to the link, a notch in said arm and a key actuated pawl adapted to coact with said notch for holding the arm in position where movement of it in a predetermined direction will cause the contact members to become disengaged.

5. In a device of the class described including a pair of contact members yieldingly held in engagement, a link pivoted at one end, an arm pivoted to its other end and adapted when in one position to throw said contact members out of engagement with each other, a bolt device fixed to said link and adapted to extend through a door casing, a cam on the free end of said bolt device, means for yieldingly holding said cam out beyond the door casing, when the door is open, means for holding said arm in position where its movement will disengage the contact members, the parts being so arranged that closing of the door will cause the bolt device to move said arm for disengaging the contact members.

6. In a device of the class described including a pair of contact members yieldingly held in engagement, a link pivoted at one end, an arm pivoted to its other end and adapted when in one position to throw said contact members out of engagement with each other, a bolt device fixed to said link and adapted to extend through a door casing, a cam on the free end of said bolt device, means for yieldingly holding said cam out beyond the door casing when the door is open, means for holding said arm in position where its movement will disengage the contact members, the parts being so arranged that closing of the door will cause the bolt device to move said arm for disengaging the contact members, and means for locking said arm in position where the contact members will be disengaged regardless of the position of the door.

7. In a device of the class described including a pair of contact members yieldingly held in engagement, a link pivoted at one end, an arm pivoted to its other end and adapted when in one position to throw said contact members out of engagement with each other, a bolt device fixed to said link and adapted to extend through a door casing, a cam on the free end of said device, means for yieldingly holding said cam out beyond the door casing when the door is open, whereby the closing of a door against the cam will cause said bolt device to be moved, means for holding said arm in position where its movement will disengage the contact members, the parts being so arranged that when said last means are inoperative the movement of the bolt will not effect the contact members.

8. In a device of the class described including a pair of contact members yieldingly held in engagement, a link pivoted at one end, an arm pivoted to its other end and adapted when in one position to throw said contact members out of engagement with each other, a bolt device fixed to said link and adapted to extend through a door casing, a cam on the free end of said bolt device, means for yieldingly holding said cam out beyond the door casing when the door is open whereby the closing of a door against the cam will cause said bolt device to be moved, means for holding said arm in position where its movement will disengage the contact members, the parts being so arranged that when the contact members are disengaged by the closing of the door they will be held disengaged while the door is closed and when the door is opened the contact members will become engaged and further movement of the locking bolt will not effect said contact members.

9. In a device of the class described including a pair of contact members yieldingly held in engagement, a link pivoted at one end, an arm pivoted to its other end and adapted when in one position to throw said contact members out of engagement with each other, a guide member for the free end of said arm, a bolt device fixed to said link whereby movement of the bolt device will impart movement to the link and a key actuated pawl for holding said arm in position where movement of the bolt device will cause the contact members to be disengaged.

Des Moines, Iowa, October 27, 1920.

HARRY KIRTLEY.