G. J. SCHNEIDER.

ELECTRIC HEATER.

APPLICATION FILED FEB. 9, 1916.

1,263,351. Patented Apr. 16, 1918.

Fig. 1.

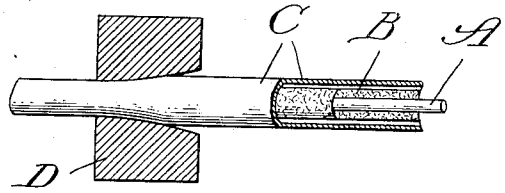

Fig. 2.

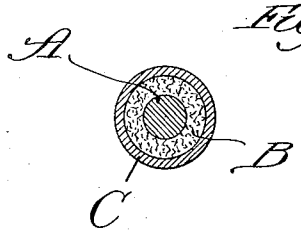

Fig. 4.

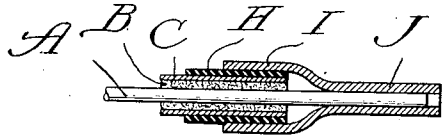

Fig. 3.

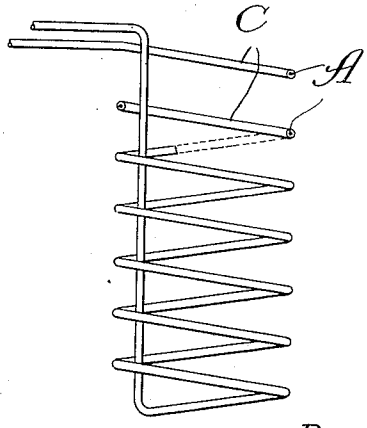

Fig. 5.

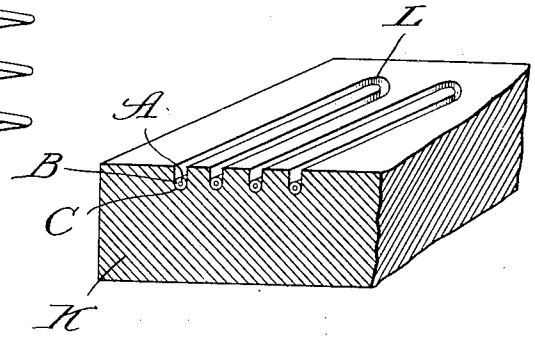

Witnesses:

E. E. Taylord.

Irwin C. Bowman.

Inventor:

George J. Schneider.

By Dyrenforth, Lee, Christy & Wiles,

Attys.

UNITED STATES PATENT OFFICE.

GEORGE J. SCHNEIDER, OF DETROIT, MICHIGAN.

ELECTRIC HEATER.

1,263,351. Specification of Letters Patent. Patented Apr. 16, 1918.

Original application filed December 31, 1908, Serial No. 470,139. Divided and this application filed February 9, 1916. Serial No. 77,180.

To all whom it may concern:

Be it known that I, GEORGE J. SCHNEIDER, a citizen of the United States, residing at Detroit, in the county of Wayne and State of Michigan, have invented a new and useful Improvement in Electric Heaters, of which the following is a specification.

It is the object of the invention to obtain a metallic-sheathed, flexible, insulated, electrical conductor which is peculiarly adapted for use as a heating unit. To this end the invention consists in the construction hereinafter set forth and described, the same being one of the specific forms set forth and described in my application filed December 31, 1908, Serial No. 470,139, of which application the present application is a division.

In the drawings: Figure 1 is a diagrammatic longitudinal section illustrating a method of sheathing the insulated conductor; Fig. 2 is an enlarged cross section through the finished product; Fig. 3 is an elevation of a spiral heating resistance formed in accordance with my invention; Fig. 4 is a longitudinal section illustrating the construction of a terminal contact for the resistance, and Fig. 5 is a sectional perspective view of a heat absorbing and distributing body in which the heat resistance is embedded.

In the construction of electrical heating resistances it is very important that the heat should be dissipated uniformly from all portions of the conductor so as to avoid the over-heating and burning out at any point. It is also desirable to distribute the heat by conduction directly from the surface of the resistance, instead of by radiation therefrom. At the same time, it is necessary to maintain perfect insulation and for many constructions the conductor must be bent into the desired form after insulation. My improved construction is one which is peculiarly adapted to fulfil these conditions, and consists essentially in a resistance conductor which is first insulated and then covered with a metallic sheathing. Furthermore, the sheathing is contracted about the insulation so as to press the same into firm contact with the conductor throughout all portions of the latter, thereby increasing its conductivity to heat and rendering the same uniform, besides offering protection.

The resistance conductor A may be formed from any suitable material and is covered with an insulation B. For this purpose, I preferably use some substance, such as asbestos fiber, which is not destroyed or injured by moderate heat. C is the sheath which surrounds the insulation B and is pressed into firm contact therewith.

I apply this sheathing to the insulated conductor by means of a drawing die D, as illustrated in Fig. 1. The insulated conductor is placed in a seamless tube which is then passed through the die to be contracted in diameter and squeezed into contact with the insulating material, the result being that both the metal and the insulating material are compressed and brought into such contact as to form a good conductor. The finished structure is shown in cross section in Fig. 4.

A sheathed conductor, constructed as described, presents a very large superficial area relative to the cross section of the resistance conductor, and on account of the compression of the material the heat is readily conducted from the resistance to the outer surface. As the sheathing is formed of pliable metal it will not materially diminish the flexibility of the conductor, and consequently any desired form may be given to the structure. As illustrated in Fig. 3, the sheathed conductor is bent into the form of a helix, which may be used as an immersion coil.

I preferably provide the heating resistance with terminal connections by means of which it may be connected directly to the external electric circuit. These terminal connections are preferably formed by a metallic contact which is clamped or otherwise secured to the end of the metallic sheathing, but is insulated therefrom. As illustrated in Fig. 4, H is an insulation surrounding the end portion of the sheathed conductor, and I is the metallic contact piece, which is secured about the insulation H. This contact piece is provided with a reduced shank J, which is electrically connected with the end of the resistance conductor A. With the construction just described, the portion J of the contact may be inserted in a socket or other contact member in the external electric circuit. The metallic contact piece "I" necessarily accomplishes an advantageous result in that by increasing the metallic radiating surface at the end of the heating unit, it keeps the end portion relatively cool. Any oxidation

of the conductor which may occur under running temperature will necessarily occur closely adjacent to the end of the unit, for only at that point is there any possible excess of air. The metallic contact piece, by lowering the running temperature at the end of the unit materially assists in preserving the life thereof.

Where the heat generated is to be distributed to a larger surface, as for instance, in a sad iron, this may be conveniently accomplished by forming the heat distributing body, such as K, with channels or grooves L, in which the sheathed conductor may be laid. Such a construction permits of readily replacing the resistance, and at the same time the surrounding body forms a heat-storing body through which the heat is distributed to the work surface.

What I claim as new, and desire to secure by Letters Patent, is:—

1. An electrical heating unit comprising a central, flexible current carrying resistor, an annular, flexible layer of refractory insulation surrounding the resistor, and a seamless, tubular, flexible, metallic outer casing, surrounding the layer of insulation and forcibly contracted to compress and hold the insulation in tight contact with the resistor and casing, means being provided for reducing the running temperature of the resistor at the ends of the heating unit below that prevailing throughout the remainder of its length.

2. An electrical heating unit comprising a central, flexible current carrying resistor, an annular, flexible layer of refractory insulation surrounding the resistor, and a seamless, tubular, flexible, metallic outer casing, surrounding the layer of insulation and forcibly contracted to compress and hold the insulation in tight contact with the resistor and casing, and a metallic contact piece having electric connection with the resistor and electrically insulated from the outer casing and in heat conducting relation therewith whereby to reduce the running temperature of the ends of the resistor below that prevailing throughout the remainder of its length.

GEORGE J. SCHNEIDER.

In presence of—
ALICE C. CLINE,
FRANK THAYER NELSON.