Aug. 1, 1933. N. C. SCHELLENGER 1,920,217

RHEOSTAT

Filed Dec. 7, 1931 2 Sheets-Sheet 1

Fig. 1.

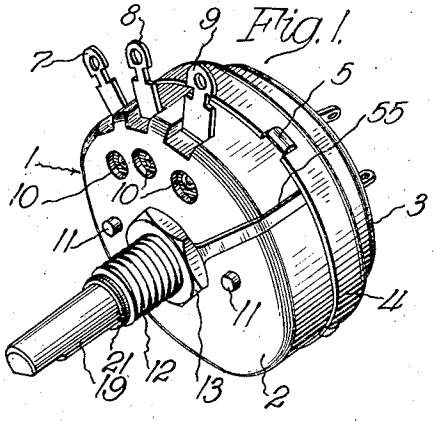

Fig. 2.

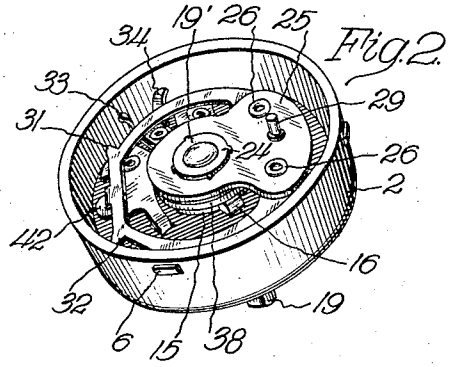

Fig. 4.

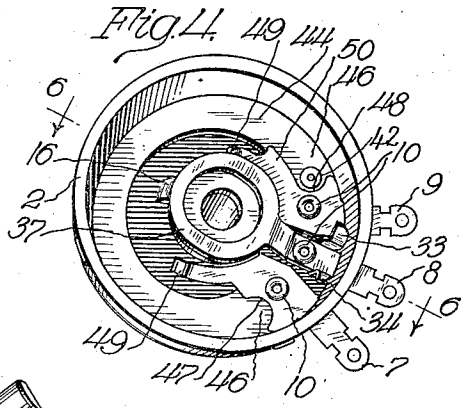

Fig. 5.

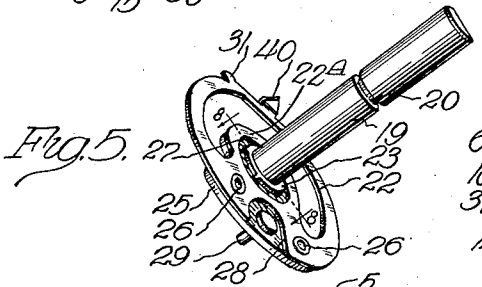

Fig. 6.

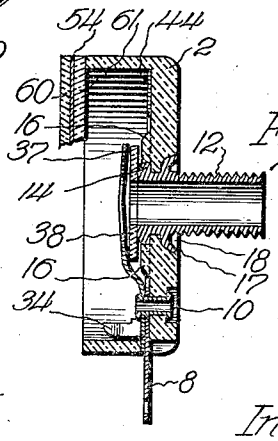

Fig. 3.

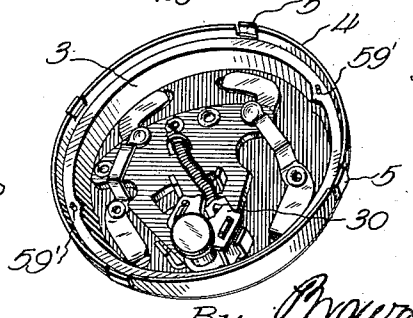

Inventor:
Newton C. Schellenger

By Brown Jackson Boettcher Dennis
Attys

Aug. 1, 1933. N. C. SCHELLENGER 1,920,217

RHEOSTAT

Filed Dec. 7, 1931 2 Sheets-Sheet 2

Fig. 14.

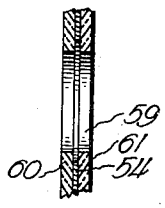

Fig. 12.

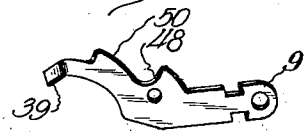

Fig. 11.

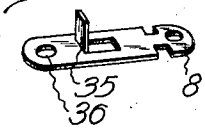

Fig. 13.

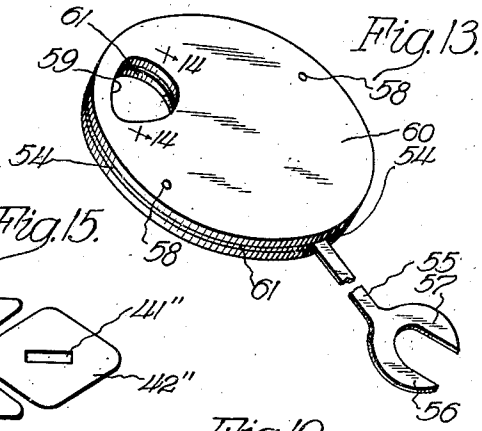

Fig. 15.

Fig. 9.

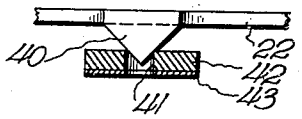

Fig. 10.

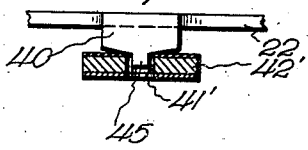

Fig. 8.

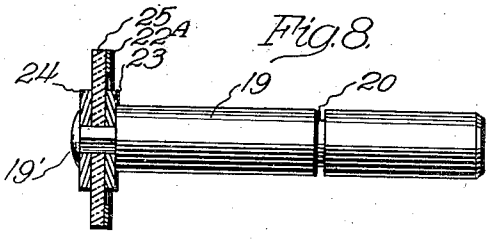

Fig. 7.

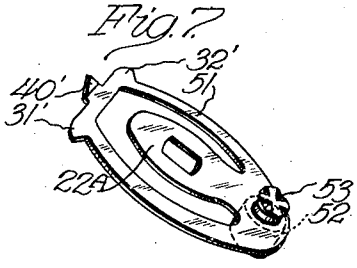

Inventor:
Newton C. Schellenger
By Brown Jackson Boettcher & Dienner
Attys.

Patented Aug. 1, 1933 1,920,217

UNITED STATES PATENT OFFICE

1,920,217

RHEOSTAT

Newton C. Schellenger, Elkhart, Ind., assignor to Chicago Telephone Supply Company, Elkhart, Ind., a Corporation of Indiana

Application December 7, 1931. Serial No. 579,552

10 Claims. (Cl. 201—55.)

This invention relates to electric rheostats of the high resistance type, and more particularly to rheostats suitable for use as volume controls in radio sets.

The invention is directed to rheostats of the type having a lower proportionate change in resistance in the vicinity of the resistance terminals than is present elsewhere along the resistance element.

The preferred form of the present invention comprises a rheostat of the type having a full wiping contact shoe. It is capable of operating on either hard or comparatively soft carbonaceous resistance elements. The contacting shoe preferably has arcuate movement along the surface of said element. The shoe may be actuated by any suitable means, and preferably is operated by a control shaft upon which the spring-pressed rheostat arm is mounted.

One of the most important features of the present invention is the provision of terminal means at each end of the resistance element, which are capable of effecting a lower proportionate change in resistance when the contacting shoe is moved into the vicinity of the terminals. These terminals are so formed that when the contacting shoe is at the limit of its movement, only a very low minimum resistance will exist between the shoe and the adjacent terminal, without these members coming into actual contact. This is accomplished by forming a recess or nest in the terminal for receiving the contacting shoe. This recess or nest is adapted to overlap the resistance element in such manner that the adjacent edges of the terminal and contacting shoe gradually converge. This is of decided advantage over the present practice in the art which comprises having the adjacent edges of the contactor and terminal represented by substantially straight and parallel lines.

In connection with this feature, it is apparent that as the contacting shoe is moved out of its nest in the terminal member, the resistance between the members will increase less rapidly than would be the case were the adjacent edges of the contactor and terminal represented by substantially straight and parallel lines. In cases where very low resistance gradient of considerable extent is desired, it is conceivable that each terminal may be provided with one or more integral divergent horns contacting with and extending a considerable distance along the surface of the resistance element beyond the recess or nest in the terminal member.

The rheostat is adapted to be embodied in a combined switch and volume control, both operating from the same shaft, especially if the rheostat is to be used in connection with a radio control. Thus, the preferred embodiment is shown, in connection with a so-called snap type of switch, as a combined unit. This type of switch is described in detail in my copending application, Serial No. 576,232, filed November 20, 1931.

In a rheostat adapted for use in such a unit, it is essential that the terminals and resistance elements be arranged as compactly as possible, without sacrificing any of the characteristics of the rheostat, so that the rheostat and its associated parts may occupy a minimum of space in the housing or shell in which they are disposed. It is necessary, in a unit of this type, to provide means for securing the rheostat and its associated housing in correct operative relation with respect to the circuit controlling switch. The rheostat must be of a type which will be capable of operating the snap switch for controlling the circuit, without interfering with the smooth operating characteristics of the rheostat. The preferred form of operating pin for controlling movement of the switch, which is carried by the spring-pressed rheostat arm, is effectively insulated from the adjacent parts of the rheostat so that there will be no danger of short circuiting the rheostat when the switch is operated.

I also preferably employ a grounded shielding means between the rheostat and the switch. In a combined unit of the present type, the volume control is frequently close, if not directly connected to the grid circuit of the first tube in the radio frequency amplification system. It is therefore apparent that when such a condition exists, or even when the volume control element is associated with the antenna circuit, a sensitive set, that is, one having a sensitivity of from five to six microvolts, a very pronounced A. C. hum will be picked up from the switch parts which carry the power supply for the radio set. In order to eliminate this hum, I have devised a static shield interposed between the rheostat and the switch for preventing any A. C. hum from being picked up by the volume control parts from the live switch parts. The shield, which preferably comprises a thin piece of sheet metal, is grounded in a suitable manner, such as by being connected to the mounting thimble of the unit, so that when the unit is assembled upon the panel, there will be an effective grounding connection between the shield and the grounded metal panel.

I have found that insulation must also be provided between the control shaft for controlling

movement of the rheostat and the rheostat arm which carries the contacting shoe, in order to prevent any current leaks from the contacting shoe to the control shaft.

It will be apparent that to provide proper insulation which is effective between these respective parts, and to maintain at the same time a relatively simple and compactly arranged switch, requires that the insulating means employed be of small size, but disposed so as to present maximum insulating characteristics. Other difficulties, such as the molding of the shell or housing, including the openings for the contact terminals, and the production of the different elements of the rheostat in a standardized and efficient manner, as by stamping and punch press operations, also require consideration.

The present invention is therefore generally directed to the provision of a combined switch and volume control which includes the desirable features pointed out above, and which, in addition, is capable of economical production and assembly.

A novel feature of the present rheostat resides in the provision of a terminal member which is adapted to act both as a terminal for the resistance element and as a terminal for connecting the resistance element to an external circuit. This combined terminal element is shaped so as to fit against a plurality of supporting surfaces, and is adapted to be held rigidly in position by means of a single rivet or eyelet. These eyelets are so disposed in the housing that there is no possibility of accidentally grounding them by contact with a metal panel or the like. The terminal element itself can be readily formed of a sheet metal stamping. The terminal element for connecting the movable contactor to an external circuit is also made to serve as a stop for limiting the movable contactor's range of movement. By the provision of this novel feature, the structure of the molded base is extremely simplified.

The insulating base or housing for the rheostat, which is preferably made of a suitable moulded compound, in the preferred embodiment of the present invention is so formed as to provide means for holding the metal or connecting ring which couples the rheostat housing and the switch housing in rigid position for joining the two housings in cooperating relationship. The terminal openings in the peripheral side wall of the housing are preferably rectangular in shape, and are so formed as to render the molding operation extremely simple. The housing is also provided with projections which engage the panel for rigidly mounting the unit thereupon, and preventing rotation of the unit with respect to the panel. I also provide, in connection with the molding of the housing, integral means formed therewith to prevent the threaded mounting thimble of the unit from turning with respect to the housing. This is accomplished by providing the mounting thimble with a flange which is expanded and rolled over below the plane of the shell base so as to hold the thimble securely in the shell, and by also providing raised lug members which cooperate with suitable grooves formed in the flange of the mounting thimble.

A further feature of the present invention is the provision of universal movement between the contacting surface of the shoe and the spring pressed contact arm. This allows the shoe to conform to variations in the surface of the resistance element, thereby insuring both a high degree of uniformity in the contact area involved, and in the unit pressure between the two members.

Other objects and advantages of my present invention will appear more fully in connection with the following detailed description, which, taken in connection with the accompanying drawings, will disclose to those skilled in the art the construction and operation of a preferred embodiment of the invention.

In the drawings:

Figure 1 is a perspective view of a combined volume control and switch;

Figure 2 is a perspective view of the rheostat or volume control;

Figure 3 is a perspective view of the switch, with the metal attaching ring which secures the switch housing in operating relation to the rheostat housing;

Figure 4 is a perspective view of the rheostat or volume control with the control shaft and contactor arm removed.

Figure 5 is a perspective view of the control shaft and contactor arm showing the arm insulated from the shaft, and also showing the operating pin for engaging the switch member insulated from the arm;

Figure 6 is a sectional view taken substantially no the line 6—6 of Figure 4, illustrating in detail the manner in which the terminal members are secured within the housing;

Figure 7 is a perspective view of a modified form of the spring pressed rheostat arm;

Figure 8 is a sectional view taken substantially on the line 8—8 of Figure 5, and illustrating in detail the mounting of the contact arm with respect to the control shaft;

Figure 9 is a fragmentary elevational view partly in section, showing the details of the contacting arrangement;

Figure 10 is a view similar to Figure 9, but showing a slightly modified form of contacting arrangement;

Figure 11 is a perspective view of the terminal member which connects an external circuit indirectly to the movable contactor;

Figure 12 is a perspective view of the terminal for the resistance element, particularly showing the horn diverging extending from the recess in which the contacting shoe is adapted to nest;

Figure 13 is a perspective view of the metallic shielding member adapted to be inserted between the rheostat housing and the switch housing to provide a static shield therebetween, with its associated grounding connection;

Figure 14 is a section taken substantially on the line 14—14 of Figure 13, showing in detail structure defining the aperture through which the cam member of the switch is adapted to project for engagement by the operating pin carried by the contactor arm; and

Figure 15 is a plan view of a modified form of shoe and cooperating terminal member.

Referring now in detail to the drawings, the combined volume control and switch unit is indicated generally by the reference numeral 1. This unit comprises the shell or housing 2, which contains the volume control or rheostat member, and the housing 3, which contains the switch member for controlling the power circuit to which the unit is connected. These two housings are held in cooperating relationship by means of a metallic ring member 4, this ring being provided with a plurality of ears such as

5, which cooperate with raised lugs 6 formed on the periphery of the rheostat shell to prevent the ring from rotating with respect to the shell when the ears carried by the ring are engaged over the lugs carried by the shell.

The molded shell or housing 2 is formed with three rectangular apertures through which the terminal members 7, 8 and 9 are adapted to project. These terminal members are provided with lugs at their outer ends which are adapted to engage the conductors leading to the various parts of the circuit. The terminal member 8 is adapted to connect the movable contactor to an external circuit, whereas the terminal members 7 and 9 are connected to the opposite ends of the resistance element. It will be noted that the rivets for supporting the terminal, as shown clearly in Figures 1 and 6, are countersunk in the outer surface of the base of the housing, so that they will be insulated from the panel upon which the control is mounted. These rivets, which are indicated by the numeral 10, may be in the form of eyelets which are simply inserted through cooperating apertures in the base and the terminal members and have their edges peened over to secure them in position.

The back of the housing 2 is provided with two outwardly projecting molded buttons or studs 11 which cooperate with suitable holes formed in the mounting panel. These studs 11 serve to prevent rotation of the volume control unit. It is necessary to provide some such means for preventing this rotation as the control is also subjected to the additional torque required to snap the switch upon opening or closing of the circuit. If such a control was mounted so that it might be rotatable with respect to the panel, the terminals of the switch, which may be connected directly to the power supply, might become grounded and result in serious damage both to the control unit and to the set.

A mounting thimble 12, having its exterior portion threaded to receive a mounting nut 13, is secured in the base of the housing 2. The inwardly projecting portion of the thimble 12 has a flange edge engaging the inner surface of the housing 2, and is provided with notches which cooperate with raised portions 16 formed in the base of the housing 2. By using this arrangement, there is no tendency to shift the axis of the thimble with respect to the axis of the control when the control is being mounted. Preferably, the inner end of the flange 14 has a slightly smaller surface area than the remainder of the flange, and provides a bearing surface at the end of the thimble.

The notches preferably are made by a single punch press operation, and the flange is secured in engagement with the notches. The thimble also has the outwardly flanged portion 17, which is adapted to seat in a recessed portion 18 of the housing 2 and which forms a bearing surface engaging the panel when the locking nut is threaded inwardly upon the thimble to secure the control in position upon the panel.

A control shaft 19, which is provided with a flattened end portion adapted to receive a suitable control knob or dial member, is inserted through the mounting thimble 12, and is provided with an annular groove 20, which receives a C-shaped washer or split ring member 21 for securing the shaft in position with respect to the thimble 12. The inwardly projecting end of the shaft 19 is provided with a reduced portion, which extends through the spring pressed contactor arm 22. Suitable washers 23 and 24, having inwardly projecting radial tongue portions, are interposed on the adjacent sides of an insulation strip or insulating member 25, which strip carries the contactor arm 22. The tongue portions are adapted to bite into the surface of the insulation strip to secure it rigidly in position. This insulating member 25 may be formed from a flat piece of suitable insulating material, and serves to effectively insulate the contactor arm 22 from the control shaft 19. The inner end of the control shaft 19 is spun over, as indicated at 19', to secure the insulating member 25 between the washers 23 and 24 in strong frictional engagement therewith. As shown in detail in Figure 8, the reduced portion of the shaft 19 is of substantially rectangular form, and serves to engage a similar rectangular slot formed in the insulating member 25, so that the insulating member will be secured in rotating engagement therewith.

The contactor arm 22 is secured to the insulating member 25 by means of suitable eyelets or rivets 26, and is provided with a central cut-out portion 27, which is of a diameter substantially larger than the diameter of the washer 23, as shown in Figure 5, to space the contactor arm 22 from the washer 23 in insulating relation thereto and to provide the equivalent of a ring contacting surface, or brush 22A (see Figs. 5, 7 and 8). As the brush 22A and the contacting member 37 oscillate relative to one another a sliding or rotary electrical contact is required. Thus, the function of the brush 22A obviously is to electrically connect the contact on the resistor, through the arm 22, together with the annular contacting member 37 and the mid terminal 8. The contactor arm 22 is also provided with a cut-out portion 28, cut into its periphery, which is adapted to fit about an operating pin 29, carried by the insulating member 25. This operating pin 29 is rigidly secured in insulated relation with respect to the arm 22, and projects through the insulating member 25 to contact the cam member 30 of the switch, shown in Figure 3.

The contactor arm 22 is in the form of an annular ring member, which has the extending ear members 31 and 32, adapted to engage suitable stop members for limiting the rotation of the arm. These extending ear members 31 and 32 contact against corresponding stop members 33 and 34 which are integral with the terminal member 8. As shown in more detail in Figure 4, the terminal member 8 has the two projecting tongue members 33 and 34, which are formed by a simple stamping operation, and which extend up into the interior of the housing 2 for the purpose of engaging the ears 31 and 32 of the contactor arm 22.

In Figure 11 I show a modified form of terminal member, which is provided with a struck up tongue portion 35, which acts as a stop for each of the ears 31 and 32. The terminal member 8 is provided with an aperture 36, which cooperates with an aperture formed in the tongue of the contacting member 37. The contacting member 37 contacts against the lower surface 22A of the contact arm 22, and as more clearly shown in Figures 4 and 6, this contactor member 37 is provided with a looped enlarged end portion which fits over an insulating washer 38 carried on the surface 14 of the thimble 12. Both the washer 38 and the contactor member 37 are provided with central openings for receiving the control shaft 19, the aperture formed in the

contacting member 37 being of a larger diameter than the washer 14, so that the contacting member 37 will be spaced from the control shaft and thus insulated therefrom. The eyelet or rivet 10 secures the contactor 37 to the terminal member 8 in rigid cooperating relationship.

It is, therefore, apparent that the control shaft 19 is effectively insulated from the contacting arm 22 and its brush 22A, and that the terminal member 8 is directly connected by means of the contacting member 37 and the brush 22A, with the arm 22, but is effectively insulated from the control shaft. The operating pin 29, for operating the snap switch illustrated in Figure 3, is insulated from the contactor arm 22, and also from the shaft 19.

The contacting arm 22 is also provided with a downwardly turned tongue or lug member 40, which is shown clearly in Figure 9, and has engagement in a suitable aperture or chamber 41 formed in the contacting shoe or disc 42. The contacting shoe 42 is preferably circular in form, and is provided with a lower surface 43 composed of a neutral metal, for engagement with the surface of the resistance element 44. The connection between the tongue member and the aperture 41 provides a universal connection between the shoe 42 and the contacting arm 22, and provides relative adjusting movement between the bottom surface 43 of the shoe and the resistance element 44. This insures a high degree of uniformity in the contact area between the shoe and the resistance element, and also assures of a substantially constant unit pressure between the contacting members. While possessing a full wiping contact upon the surface of the carbonaceous resistance element, the shoe is adapted, because of its universal connection, to effect no detrimental changes in either the electrical or physical characteristics of the resistance element.

In Figure 10 I have shown a slightly modified form of universal connection, wherein the depending tongue member 40 is provided with a second reduced stud portion 45, which is adapted to seat in an aperture 41' of the contacting shoe 42'. In this modification there is a slight lost motion connection between the tongue 45 and the shoe 42'.

The resistance element upon which the shoe is adapted to have wiping contact, preferably comprises a carbonaceous strip of generally annular shape, which is provided with enlarged end portions adapted to lie under the terminal members 7 and 9. By providing the enlarged end portions under the terminal, a considerable pressure may be exerted by the rivets or eyelets used in mounting the terminals, without exceeding the allowable unit pressure of the resistance strip. This affords a much better contact with the resistance strip and also prevents damage to the strip in the mounting of the terminal.

While the resistance strip 44 may be cemented to the flat face of the housing 2, I preferably coat the back of the resistance element with a suitable material to neutralize the strains set up by the carbonaceous resistance film and thus prevent curling of the element. This material may comprise any type of coating, such as varnish, lacquer, or the like, which will have the desired amount of shrinkage upon setting to offset the curling effect of the paper caused by the coating of the conducting paint on the opposite side thereof. This makes it possible to mount the resistance element merely by means of the end terminals, without resorting to the use of a cement or glue for securing it to the housing.

The enlarged ends 46 of the resistance element are adapted to fit under the inner portion of the terminal members 7 and 9. These terminal members 7 and 9 have recessed portions 47 and 48 which are adapted to form a nest in which the shoe or contact disc 42 is adapted to seat when the volume control is in its minimum and maximum positions.

I preferably show these recesses as being of arcuate form, but any other form might be employed. For example, in Figure 15 I show a contacting shoe 42'' of substantially diamond form, with a rectangular perforation 41'' formed therein for maintaining the shoe in aligned position. The terminal member 9' is provided with a recess 48' which conforms to the configuration of the contacting shoe. This nesting of the shoe and terminal materially increase the extent of the adjacent edges of the terminal and shoe.

As shown in Figure 4, the diameter of these recesses or nests is slightly larger than the diameter of the contacting disc, so that one half of the disc's periphery is separated from the concentric edge of the terminal by only a few thousandths of an inch. By this particular arrangement the extent of the adjacent edges of the disc and terminals is, for a circular contacting disc of given diameter, increased in excess of approximately 50% over the adjacent edges of a contactor terminal represented by two straight and parallel lines. This provides a rheostat wherein the resistance gradient increases very slowly for a considerable distance on each side of the terminal members.

The inner end of the terminal member 9 is provided with a downwardly turned tongue portion 39 which seats in a suitable recess 49 formed in the bottom of the housing 2. The recess 49 is directly above the projecting buttons or studs 11 which as hereinbefore described serve to secure the control in rigid position with respect to the panel. The terminal member 9 is also provided with a recess which has a diverging horn extending for a considerable distance along the surface, adjacent one edge, of the resistance element 44. In many cases where a very low resistance gradient of considerable extent is desired, it is preferable to make the terminal with integral diverging horns contacting with and extending a considerable distance along the surface of the resistance element beyond the usual semi-circular recess or nest. This, in effect, produces a continuation of the extent of the adjacent edges of the disc and the terminal, and provides for increasing the distance along which the disc and the terminal member are in closely related position, wherein the resistance afforded by the area of the resistance element between the terminal member and the disc will be very slowly decreased, thus affording a very slowly decreasing or increasing resistance gradient. I have indicated such a diverging horn by the reference numeral 50 in Figures 4 and 12, but it is to be understood that this type of diverging horn extending from the recesses 47 and 48 may be provided at both terminal members and may also be provided along both sides of the resistance element.

As shown in detail in Figure 12, the resistance terminal is integral with the extending terminal 9, and the entire terminal portion is inserted from the interior of the housing, with the projecting lug portions 9 extending through the rec-

tangular opening formed in the housing 2. These terminal members have supports along a plurality of surfaces, so that they will be rigidly held in position by means of a single eyelet or rivet 10. As clearly shown in Figure 4, the terminal element 9 has support on the two sides of the rectangular opening to which the connecting portion of the terminal extends, and has support along the inner periphery of the wall of the housing 2. Further, the inwardly extending portion 39 of the terminal member is supported in the recess 49 formed in the base of the housing 2, and therefore the terminal member is securely held in position, merely by its contact with the surrounding supporting surfaces. The eyelet 10 serves to secure the terminal 9, together with the enlarged end 46 of the resistance element, in tight contact relation.

Referring now to the embodiment shown in Figure 7, this is a perspective view of a contactor arm adapted for use when it is not necessary to insulate the arm from the control shaft. In devices of the type herein disclosed, it is sometimes desirable to have the central terminal directly connected to the inner shaft end of the mounting bushing, and in such cases the arm is changed so as to eliminate the necessity of the insulator support 25, shown in Figure 2. The shaft is then secured directly to the arm, as by means of washers corresponding to the washers 23 and 24, which frictionally engage the contactor arm. In using an arm of this type, a fibre pin 52 may be used in place of the metallic pin 29 for the purpose of operating the switch.

This type of contactor arm, indicated by the numeral 51, is similar to the contactor arm 22, and has the extending ears 31' and 32' which correspond to the ears 31 and 32 of Figure 2. The arm is also provided with a depending tongue 40' adapted to engage the contact shoe for moving the shoe over the surface of the resistance element. The pin 52 used for operating the snap switch arm is composed of fibre or other suitable insulating material, and has a portion 53 of reduced diameter which fits snugly into an extruded hole in the contactor arm. By extruding the hole into which the pin fits, a much greater supporting surface is provided, and a fillet is also provided under the shoulder of the pin which will, as shown, greatly strengthen the pin in its operating position. Preferably the pin 52 is thoroughly dehydrated before being assembled in the contacting arm, so that if any moisture is absorbed, the pin will merely become more securely engaged in the arm.

In a combined volume control and switch of the type disclosed in this invention, the switch, which might in some cases carry an alternating current of audible frequency, is disposed in relatively close proximity to the volume control, and there may be an appreciable feed-back or coupling between the switch and the volume control, which in many cases will be so connected in the circuit of the radio set that such a coupling may be objectionable. In order to prevent such a coupling, I preferably employ a metallic plate which serves as an electro-magnetic and electrostatic shield between the shield and volume control. This metallic plate is shown in detail in Figures 13 and 14, and is indicated by the reference numeral 54. It is composed of a flat sheet of suitable metal and is of a thickness on the order of a ten one thousandth (0.010) of an inch. It is provided with a narrow electrical conductor ribbon portion 55 extending from the periphery thereof, which is adapted to be bent along the outer periphery of the housing 2, as shown in Figure 1, and is provided at its end with a bifurcated or forked end portion which fits around the mounting thimble 12. This forked end portion is composed of the two arms 56 and 57, which fit around the thimble 12 and are adapted to form a substantial electrical contact due to the large surface bearing against the panel when the unit is mounted. If desired, a looped end portion may be provided in place of the forked end. This contact is effectively increased by means of the pressure exerted when the mounting nut is drawn up tight to secure the control in position.

The plate 54 is provided with a pair of diametrically opposed apertures 58 formed in the periphery thereof which are adapted to fit over projecting pins 59' extending from integral projections carried by the peripheral wall of the housing 3. This serves to locate the shielding plate in position with respect to the switch so that the aperture 59 formed therein will fit over the cam portion 30 of the switch.

As shown more clearly in Figure 14, the aperture 59 is shaped to conform to the general outline of the cam member 30, and is of a size large enough to accommodate movement of the cam member from on to off position. The metallic member is provided with an aperture slightly larger than the required aperture 59, and the two insulating disc members 60 and 61 are positioned on opposite sides of the disc for effecting insulation between the switch and the volume control. These insulating members 60 and 61 may be formed of a flat piece of fibre or other suitable insulating material, and the apertures cut therein are smaller than that formed in the metallic plate 54. This will provide insulation about the cam member 30 of the switch which projects through this opening and will thereby insulate the shielding plate from the cam member. The insulating discs 60 and 61 may be secured to the plate member 54 in any suitable manner, such as by gluing or cementing, or they may be riveted thereto by means of suitable eyelets.

By the provision of this metallic shielding means, it is possible to dispose the volume control and switch in close proximity to each other without in any way influencing the individual characteristics of each part of the unit. This shield, as well as the mounting thimble and control shaft, is effectively grounded to the grounded metal panel upon which the control unit is mounted.

I also have provided means for effectively insulating the contactor arm 22 from the control shaft, so that there will be no possibility of grounding of this contactor arm. By the configuration of the contacting arm it is also possible to provide a metallic operating pin for the switch which is effectively insulated from the arm. Effective insulation is also provided between the contacting member 37 and the thimble for preventing any current leakage through these parts.

Also, as pointed out in my co-pending application, mentioned above, the ring member 4 serves to hold the volume control and switch in rigid cooperating engagement, while permitting ready disassembly of the unit for inspection and repair.

The direct wiping engagement of the contacting disc 42 with the carbonaceous resistance element insures an effective, but low resistance, contact between the contacting arm 22 and the resistance element, while the wiping action insures that

the exposed surface of the element will be kept clean. Also, the universal movement between the contacting arm 22 and the shoe 42 will result in an evenly distributed contact between the resistance element and the shoe, and will permit the shoe to travel over imperfections in the surface of the resistance element without damaging the surface.

Other objects and advantages of my invention are contemplated, and I do not intend to be limited to the particular embodiment shown and described, but only insofar as defined by the scope and spirit of the appended claims.

I claim:—

1. In a rheostat, a flat resistance element, a non-flexible conducting contactor, said contactor having a flat surface in contact with said resistance element, an operating shaft, an arm being operatively connected to said shaft, and a universal connection between said arm and said contactor having an interfitting tapered lug and chamber in which the sidewall of the chamber is engaged by the lug whereby said contactor may be moved along the surface of said resistance element upon the actuation of said shaft and to permit said contactor to seat itself properly on the resistance element.

2. In a rheostat, a flat resistance element, a disc-like conducting contactor having a substantially flat surface being adapted to contact with said resistance element, an operating shaft, a spring contact arm operatively connected to said shaft, means between said contactor and said contact arm having an interfitting tapered lug and chamber in which the sidewall of the chamber is engaged by the lug to permit said contactor to seat itself properly on the resistance element and said arm being adapted to hold said contactor in pressure engagement with and to move said disc-like contactor along the surface of said resistance element.

3. In a rheostat, a carbonaceous resistance element, a flat contacting shoe on said resistance element, said contacting shoe of conducting material, an operating shaft, an arm adapted to be moved by said shaft, and means universally connecting said flat contacting shoe and said arm having an interfitting tapered lug and chamber in which the sidewall of the chamber is engaged by the lug to permit said contacting shoe to seat itself properly on the resistance element, and said contacting shoe being substantially non-rotatable about its own axis relative to said arm.

4. In a rheostat, a base, a resistance element extending in a plane parallel to the base thereof, terminal members for said element, a conductive planar contacting shoe coplanar with and for engagement with said element, said shoe having a chamber centrally therein, an operating shaft, a resilient arm carried by said shaft, and a tapered lug on said arm and engaging the chamber of said shoe for permitting limited universal movement of the shoe and for moving said shoe along said element upon rotation of said shaft.

5. In a rheostat, a resistance element disposed upon a base, terminal means for said resistance element, a rotatable shaft, a flat contacting shoe of conducting material for engaging said resistance element, said shoe having a chamber therein, and means resiliently connecting the chamber of said shoe and said shaft for a limited universal movement of the shoe whereby the shoe may seat itself properly upon the said resistance element, and whereby said shoe may be moved along said element upon the rotation of said shaft.

6. In a variable resistance device, a resistance element disposed upon a base, terminals for said resistance element, an actuating shaft, a flat contacting shoe of conducting material for operatively engaging said element, said shoe having a chamber therein, a resilient arm connected to said shaft, a lug having tapered sides attached to said arm, said tapered sides entering the chamber whereby there is a limited universal movement of said shoe about said lug and whereby said shoe may be moved along said resistance element upon the rotation of said shaft.

7. In a rheostat, a resistance element, an operating shaft, a perforated flat contacting shoe, said shoe of conducting material, an arm actuated by said shaft, a projection rigidly attached to said arm and adapted for entering said perforation of the contacting shoe whereby said contacting shoe may move in engagement with the surface of said resistance element upon rotation of said shaft and to permit said shoe to seat itself properly upon the said resistance element.

8. In a rheostat, a resistance element disposed on a base, terminal means for said resistance element, a rotatable shaft, a perforated flat contacting shoe engaging said resistance element, an arm rotatably actuated by said shaft, a tapered lug attached to said arm and engaging the perforation in said shoe whereby said lug is adapted to move said contacting shoe along the surface of said resistor upon rotation of said shaft, a sliding ring contactor electrically connected to said arm and also the shoe, a contacting member being adapted to engage said sliding ring contactor, and a terminal member electrically connected to said contacting member.

9. In a rheostat, a resistance element supported on a base, a rotatable shaft, terminal members for said element, a planar contacting shoe being adapted to engage said element, a chamber in said shoe, a resilient contactor arm, a tapered lug on said arm entering the said chamber, a rotatable ring contactor electrically connected to said arm and shoe, a non-rotatable ring contactor for engagement with said rotatable ring contactor, and a terminal member for said non-rotatable ring contactor.

10. In a carbonaceous resistor, a resistance element, a rigid flat contactor in contact with said resistance element, an arm adapted to move said flat contactor over the surface of said resistance element, and means between said flat contactor and said arm comprising an interfitting lug and chamber wherein the sidewall of the chamber is engaged by the lug whereby said shoe may seat itself properly upon the said resistance element.

NEWTON C. SCHELLENGER.

CERTIFICATE OF CORRECTION.

Patent No. 1,920,217. August 1, 1933.

NEWTON C. SCHELLENGER.

It is hereby certified that error appears in the printed specification of the above numbered patent requiring correction as follows: Page 2, line 105, for "no" read "on"; page 6, line 123, claim 9, before "planar" insert "rigid"; and that the said Letters Patent should be read with these corrections therein that the same may conform to the record of the case in the Patent Office.

Signed and sealed this 24th day of October, A. D. 1933.

F. M. Hopkins

(Seal) Acting Commissioner of Patents.