Sept. 5, 1967 J. L. PATTERSON, JR., ETAL 3,340,521

ALARM SYSTEM

Filed May 21, 1964

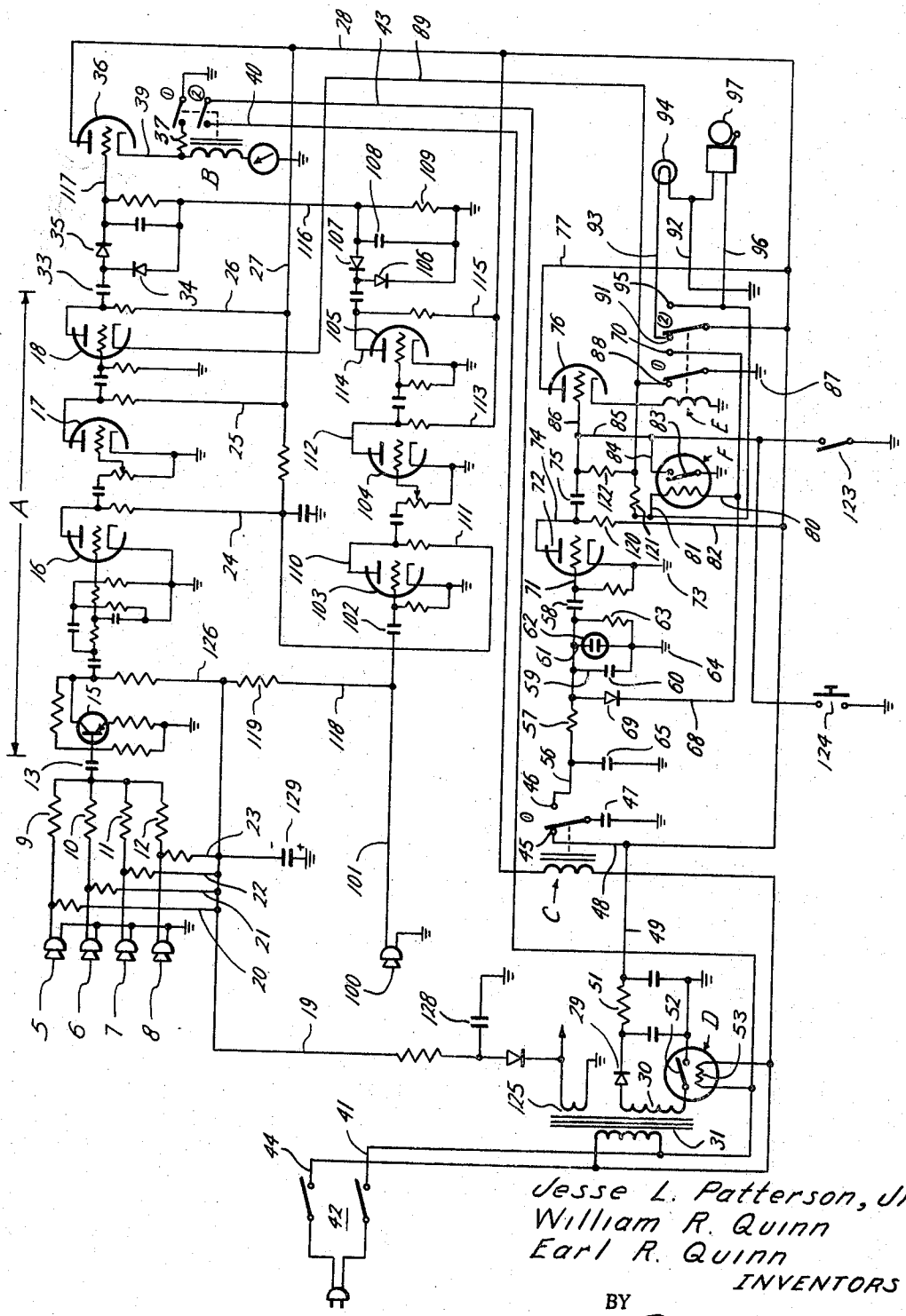

Jesse L. Patterson, Jr.
William R. Quinn
Earl R. Quinn
INVENTORS

BY

Bertram H. Mann
ATTORNEY

United States Patent Office 3,340,521 Patented Sept. 5, 1967

3,340,521

ALARM SYSTEM

Jesse L. Patterson, Jr., William R. Quinn, and Earl R. Quinn, Houston, Tex., assignors, by mesne assignments, to Automatic Sprinkler Corporation of America, Houston, Tex., a corporation of Ohio

Filed May 21, 1964, Ser. No. 369,232
5 Claims. (Cl. 340—258)

This invention relates to alarm systems, particularly of the type which may be installed in institutions or other large buildings for causing an alarm responsive to the presence of an intruder.

Most intruder alarm systems, for instance, those energized by the opening of a window or a door, are subject to malfunctioning or to being tricked. Where the alarm is sound sensitive, it may be energized by sounds not caused by an intruder. Accordingly, there is need for a reliable intruder alarm system which will be energized to give an alarm, with reasonable certainty, only when an intruder is present.

Accordingly, an object of the present invention is to provide a novel intruder alarm system with such safety features as to render the alarm substantially inoperable by occasional or expected sounds.

Another object is to provide a sound-sensitive alarm system including means for preventing the operation of the alarm device when expected sounds are produced in the monitored region, for instance, the striking of a clock or the like.

Another object is to provide a sound-sensitive alarm system which is not energized by occasional random sounds.

In accordance with the present invention, there is provided an alarm system which incorporates any number of microphones located in the vicinity of regions to be protected and circuits connecting the microphones through suitable amplifiers with an audible or other alarm device. One or more additional microphones are located near expected sounds and connected into the circuitry in such a way as to prevent the giving of a signal responsive to such sounds. Furthermore, the circuitry includes repeater means whereby a sound must be repeated a predetermined number of times within a definite time interval, as characteristic of sounds produced by an intruder, in order to set off the alarm. Finally, the microphones or other circuitry may be desensitized to sounds of certain quality, for instance, road noises.

In the accompanying drawing which illustrates the invention the figure is a diagrammatic representation of exemplary circuitry used.

In the figure, there are shown four monitoring microphones **5**, **6**, **7**, and **8**, although any number may be provided, which are located in the areas to be protected. All of these microphones are connected through resistances **9**, **10**, **11**, and **12** and a condenser **13** to amplification stage A including a transistor **15** and thermionic tubes **16**, **17**, and **18**, resistances and capacitances being interposed in the amplifier circuit in conventional manner as shown. Electrical energy for the transistor is supplied through wires **19–23** inclusive. The anodes of tubes **16**, **17**, and **18** are connected through wires **24**, **25**, **26**, and **27** to positive D.C. power line **28**, in turn connected through diode rectifier **29** to secondary **30** of transformer **31**. The anode of tube **18**, also, is connected through a condenser **33** and a full-wave rectifier, including diodes **34** and **35** and thence to the grid of a tube **36**. The cathodes of tubes **16** and **17** are grounded.

The winding of a relay B is connected by a wire **39** to the cathode of tube **36** so as to function as a cathode follower, responsive to an excitation of one of the microphones **5**, **6**, **7**, or **8**. Relay B has a normally open contact B–1 which is grounded and thereby serves to shunt the relay winding through resistance **37** to eliminate or reduce the differential normally existent between the relay energizing and de-energizing voltages. Normally open relay contact B–2 is connected by a wire **40** through the winding of a relay C to a power source **41** controlled by two pole switch **42**. Relay pole contact B–2 connects via a wire **43** to the other main power line **44**. Relay C has a double throw contact pole C–1 and a pair of contacts **45** and **46**. Pole C–1 connects through a condenser **47** to ground. Relay contact **45** is connected by wires **48** and **49** to a positive D.C. power source, including transformer secondary **30**, a diode rectifier **29**, and a resistance **51**. The other end of secondary **30** is connected to ground across the normally open contacts **52** of a thermal switch D, the heater **53** of which is connected across A.C. power lines **41** and **44**.

The other contact **46** of relay C is connected by a wire **56** and resistance **57** to a condenser **58** and also through a wire **59** to a condenser **60** and a wire **61** to a neon bulb **62**. A high ohmage resistance **63** shunts condenser **60** and bulb **62**. Wires **59** and **61** and resistance **63** are grounded at **64**. Wire **56** is also grounded through a shock absorber condenser **65** and is connected by a wire **68** through a diode rectifier **69** to the normally open contact **70** of a relay E. Previously mentioned condenser **58** is connected by a wire **71** to the grid of a thermionic tube **72**. The cathode of tube **72** is grounded at **73**, while the anode of this tube is connected by a wire **74** through a condenser **75** to the grid of a tube **76**. The winding of relay E is connected to the cathode of tube **76**, as a cathode follower, while the anode of tube **76** is connected by a wire **77** to the positive D.C. line **28**.

The heater unit of a thermal switch F is connected, during operation by wires **80** and **81** across D.C. positive line **28** through contact **95** of relay E and wire **68** leading to contact **46** of relay C. The contact **83** of thermal switch F connects ground through wires **84** and **85** to wire **86** connecting condenser **75** to the grid of tube **76**.

Relay E has two double-throw contact poles E–1 and E–2. Relay pole E–1 is grounded at **87**. Normally closed relay contact **88** is connected by a wire **89** to the cathode of amplifier tube **18** so as to normally enable the amplifier. Normally open relay contact **70**, previously mentioned, grounds wire **68** leading through diode **69** and resistance **57** from previously mentioned contact **46** of relay C. Normally closed relay contact **91**, associated with relay contact pole E–2, which is connected to ground, closes a circuit through wire **92**, which is connected to ground, and wire **93** for energizing an "all clear" signal **94**. Normally open contact **95**, also associated with relay pole contact E–2, serves through wires **92** and **96** to energize an alarm, as an audible alarm **97**, this being responsive, as will be explained, to an intruder created signal.

The remainder of the circuit is for the purpose of preventing expected sounds from energizing the alarm. At **100** is represented a microphone which would be positioned in the vicinity of an expected sound, as a striking clock, mechanical refrigerator, or the like. This microphone is connected by a wire **101** and condenser **102** through three-stage amplification tubes **103**, **104**, and **105** to a full-wave rectifier, including diodes **106** and **107** with shunting condenser **108** and resistance **109**. The anodes of the tubes are connected, respectively, by wires **110–115**, inclusive, to positive D.C. line **28**. The cathodes of these tubes are provided with grounds and grid leak

resistances, as shown. A wire **116** connects full-wave rectifier **106**, **107** to wire **117** connecting full-wave rectifier **34**, **35** to the grid of tube **36**. The purpose of this circuitry, as will be explained, is to cancel out a signal impressed on cancellation microphone **100** and also transmitted through one of the alarm microphones **5**, **6**, **7**, or **8**. Wire **101** is also connected by a wire **118** including resistance **119** to negative potential source wire **19**.

The apparatus operates as follows: When the system is monitoring normally and under conditions when no alarm should be given, normally closed E relay contact **88** may be used to energize a signal, for instance, a bulb **94**, to indicate that everything is in order. Now, in case an energizing sound is picked up by one of the alarm microphones **5**, **6**, **7**, or **8**, but not by cancellation microphone **100**, the resultant energy will be amplified by means A, rectified by diodes **34** and **35**, and applied as a positive pulse to the grid of tube **36**. Tube **36**, then, will become conducting causing energization of the winding of cathode follower relay B, which through normally open relay contacts B–**2** will energize the winding of relay C. Relay pole C–**1**,, normally, engages contact **45** which directs a charge from transformer secondary **30** and wires **49** and **48** upon condenser **47**. Upon the switching of relay pole C–**1** into engagement with contact **46**, condenser **47** will be discharged into condensers **58** and **60**. The capacity of condenser **47** is very much smaller than that of condensers **58** and **60** so that several pulses from condenser **47** are necessary to fully charge condensers **58** and **60**. Conveniently, condenser **47** may be of .15 microfarads capacity and condensers **58** and **60** of sufficient capacity that about five discharges from condenser **47** and, consequently, five signal pulses from the alarm microphones, are necessary to fully charge condensers **58** and **60**. Of course, condenser **47** is recharged each time relay pole C–**1** returns to normally closed contact **45**. When the charge on capacitors **58** and **60** reaches approximately 70 volts, neon lamp **62** fires, discharging condensers **58** and **60**, generating a negative pulse on the grid of tube **72**. The accumulated charges on condensers **58** and **60** may leak off through resistance **63**, in an exemplary embodiment of the value 22,000,000 ohms, so that the impulses from condenser **47** necessary to fully charge condensers **58** and **60** must occur within a predetermined time interval. The reason for this is that it is characteristic of an intruder that the noises caused will be repeated and, thus, random and other noises not repeated sufficiently within the predetermined time interval will not set off the alarm because, in the intervening time, condensers **58** and **60** may discharge through resistance **63**.

The discharge of condensers **58** and **60**, as explained, has the effect of rendering the grid of tube **72** more negative, and, therefore, the anode of this tube becomes more positive, causing a positive pulse to be supplied through line **74**, resistors **120**, **121**, and **122**, and wire **86** to the grid of tube **76**. This then energizes the cathode following winding of relay E causing its pole contacts E–**1** and E–**2** to reverse. Such reversal of pole E–**1** connects relay contact **70** to ground to complete the discharge of condensers **58** and **60**. The reversal of relay pole E–**2** energizes contact **95** and wire **93** to produce a signal, as through the audio device **97**. Shifting of relay contact E–**1**, as stated, causes supply of positive energy to the grid of tube **76**, through wire **80**, the heater of thermal relay F, resistances **121** and **122** and wire **86**, in effect, latching relay E in alarm condition. However, contacts **83** of this thermal relay will close after a predetermined interval, grounding the grid of tube **76** and unlatching relay E to stop the alarm. The same effect may be achieved, to stop the alarm signal, by closing reset button **123** or by closing a key switch **124**.

In case of a sound which is monitored by the cancellation microphone **100**, the amplified energy resultant therefrom is converted into a negative pulse by diodes **106** and **107** and fed through wire **116** whence it is added algebraically to the positive pulse generated in wire **117** by the effect of the same sound on one of the alarm microphones. This prevents the energization of cathode follower relay B and the resultant shifting of counting relay pole C–**1**.

It should be further noted that while contacts E–**1** are closed amplifier **18** is disabled and hence the signals detected by microphones **5**, **6**, **7** and **8** have no effect on the circuit operation.

A secondary winding **125** supplies energy through wire **19** to the filaments of all of the tubes and also to microphones **5**–**8** through wires **21**, **22**, and **23** and to transistor **15** through a wire **126**. At **128** and **129** are shown filter condensers for the power supply.

Various features of the circuitry may be modified as will occur to those skilled in the art. The wires **92** and **93** controlled by relay pole contact E–**2** may be utilized for a purpose other than illuminating a "ready" lamp, or may serve no purpose in connection with the system. Moreover, the alarm may be tied in with a communication system throughout the building. The invention may be modified in these and other respects as will occur to those skilled in the art, and the exclusive use of all modifications as come within the scope of the appended claims is contemplated.

I claim:

1. In an alarm system, an electric circuit including in series

a microphone,

means for converting microphone excitations to electrical energy, and

the first contacts of a double throw switch;

a second circuit including

a first condenser,

a source of condenser charging current for charging said condenser through said first switch contacts when said switch is in a first position;

a third circuit including

a second condenser,

the other of contacts of said switch, and

an alarm device;

means responsive to acoustical excitation of said microphone for shifting said switch from said first to said second position for discharging said first condenser into said second condenser,

the capacity of said second condenser being sufficiently greater than that of said first condenser so that a predetermined number of discharges from said first condenser are required to charge said second condenser to a preselected voltage level; and

circiut means connected to said second condenser for responding to said preselected voltage level to discharge said second condenser and to initiate energization of said alarm device.

2. An alarm system as described in claim **1** further including a resistance connecting said second condenser to ground in a manner to bleed off the charge on said second condenser to establish a time interval during which said shifts of said switch must occur in order to energize said alarm device.

3. An alarm system as described in claim **1**, further including

an amplifier initially activated by the overcharge of said second condenser,

a relay for energizing said alarm device activated by the output from said amplifier,

means for maintaining the activation of said amplifier after its initial activation, and

a thermal switch for disabling said amplifier after a predetermined period.

4. In an alarm system, a first electrical circuit including

a microphone,

an amplifier, and

the winding of a relay having a double throw movable contact and first and second contacts for alternative engagement thereby, said winding being activated by a signal from said amplifier;

a second circuit including

said movable contact, and

a first capacitance operably connected thereto;

a third circuit including

said first relay contact, and

a source of condenser charging current for charging said capacitance when said movable contact is in a first position;

a fourth circuit including

said second relay contact,

a second capacitance operably connected thereto, and

an alarm device connected for operation in response to a charge of preselected magnitude on said second capacitance; and

an operative connection between said microphone and said relay movable contact through said amplifier and said winding for shifting said movable contact to a second position in engagement with said second relay contact in response to acoustical excitation of said microphone, thereby transferring the charge on said first capacitance to said second capacitance, the capacity of said second capacitance being sufficiently greater than that of said first capacitance so that a predetermined number of charge transfers from said first capacitance to said second capacitance are required to charge said second capacitance to said preselected magnitude; and

circuit means connected to said second capacitance for responding to said charge of preselected magnitude to energize said alarm device and to substantially discharge said second capacitance.

5. The combination described in claim 4, further including a resistance for delaying bleed off of said second capacitance for a predetermined period such that said predetermined number of charge transfers between said capacitance must occur within a predetermined time interval to cause energization of said alarm device.

References Cited

UNITED STATES PATENTS

2,007,371	7/1935	Hopkins	340—261
2,086,913	7/1937	Kelly.	
2,329,570	9/1943	Wellenstien.	
2,428,290	9/1947	Peck	340—258
2,435,996	2/1948	Baird	340—258
2,462,532	2/1949	Morris	179—1.8
2,578,347	12/1951	Gagnaire.	
2,767,393	10/1956	Bagno	340—258
2,826,753	11/1958	Chapin	340—258
2,907,012	9/1959	Pitman	340—261 X
2,925,583	2/1960	Jeffers	340—37
2,942,247	6/1960	Lienau	340—261 X
3,109,165	10/1963	Bagno	340—258
3,134,970	5/1964	Kelly	340—261
3,155,954	11/1964	Larrick	340—261

NEIL C. READ, *Primary Examiner.*

D. L. TRAFTON, R. M. GOLDMAN,
Assistant Examiners.