Nov. 30, 1971 G. A. GRUSS 3,623,426

PRINT CONTROL MEANS IN TRAVELING ROLLER BED AND CYLINDER PRINT MACHINES

Filed Oct. 27, 1969 3 Sheets-Sheet 1

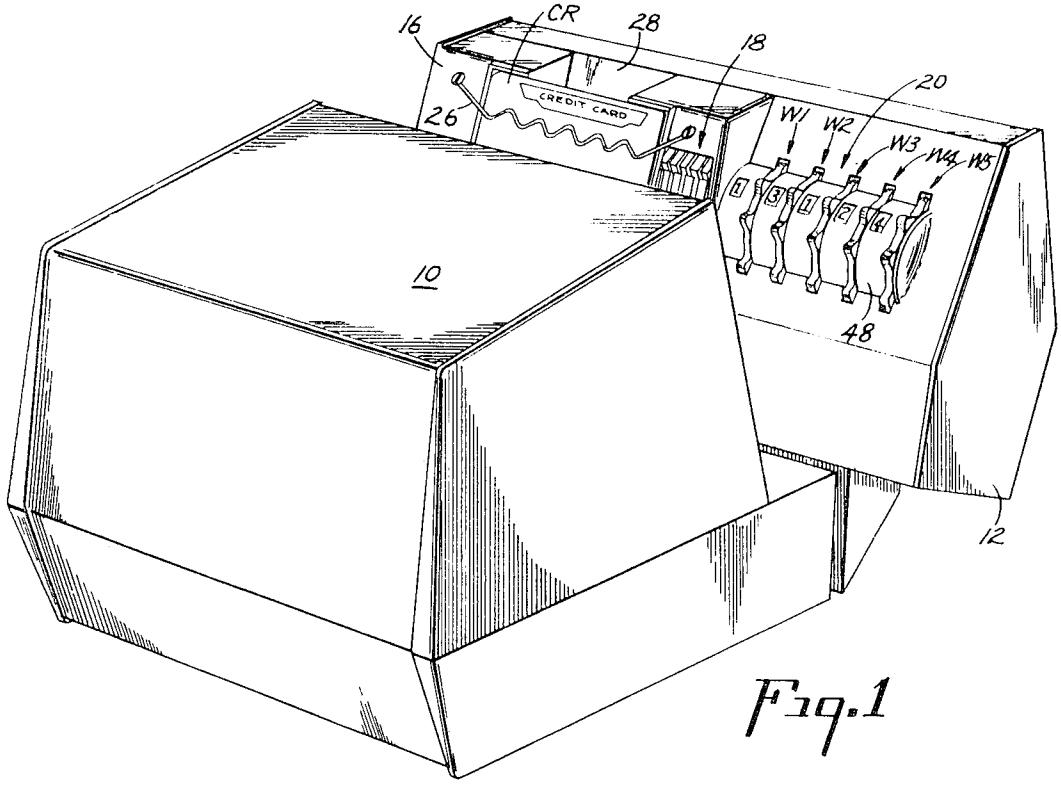


Fig. 1

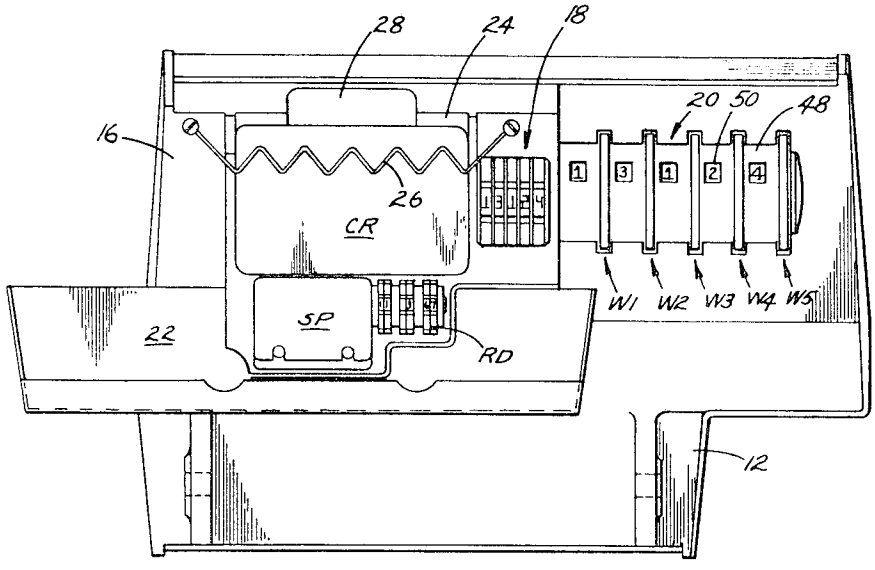


Fig. 2

INVENTOR
GEORGE A. GRUSS
BY Russell L. Root
ATTORNEY

Nov. 30, 1971 G. A. GRUSS 3,623,426

PRINT CONTROL MEANS IN TRAVELING ROLLER BED AND CYLINDER PRINT MACHINES

Filed Oct. 27, 1969 3 Sheets-Sheet 2

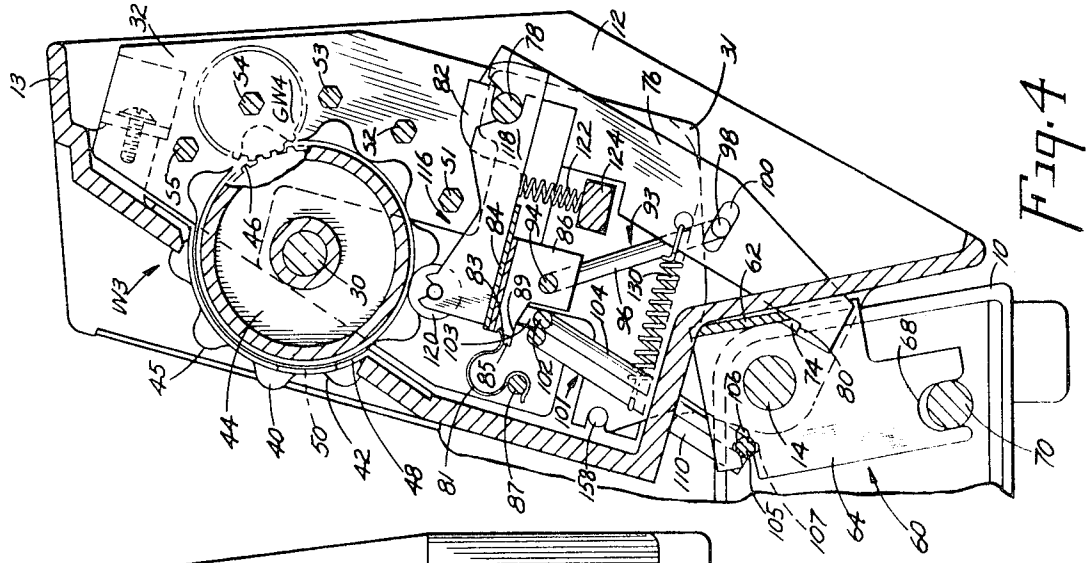

Fig. 4

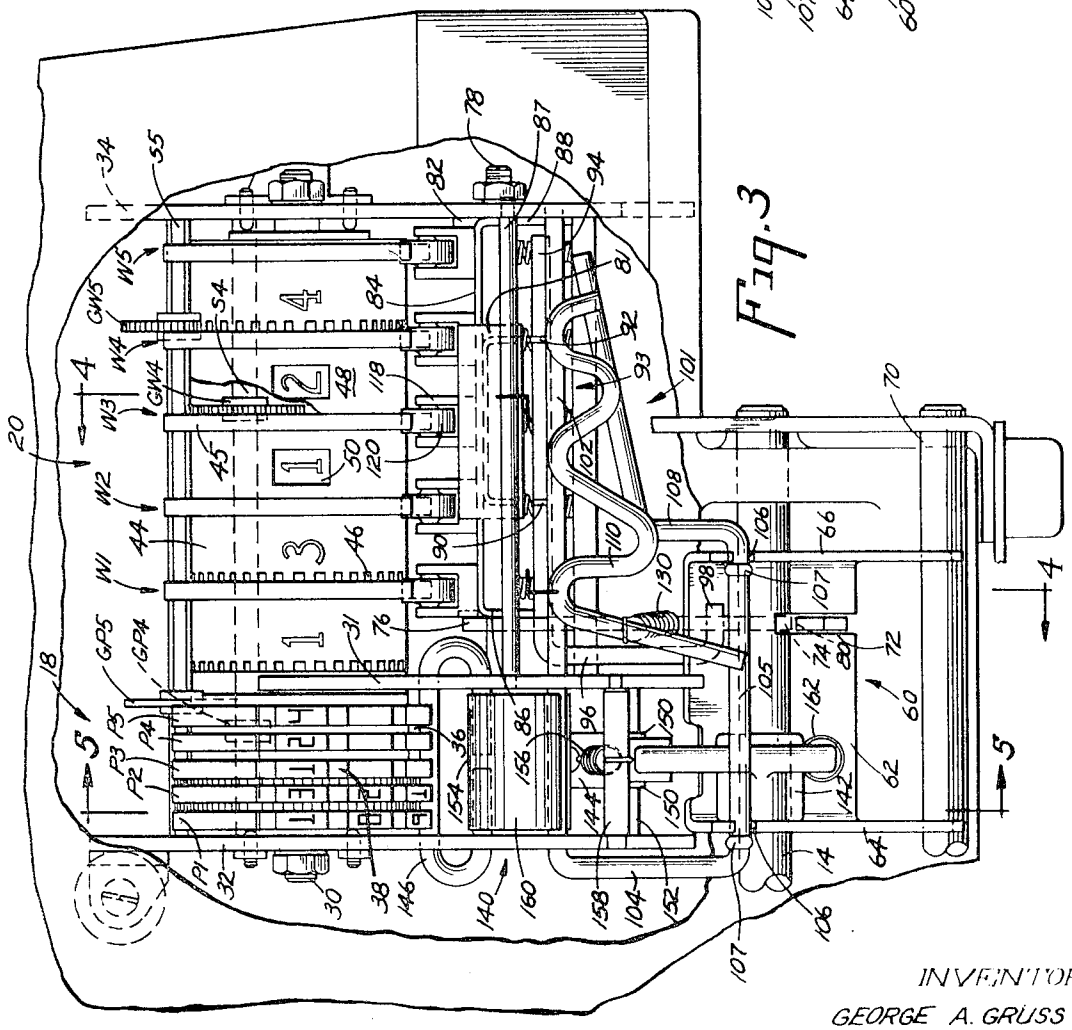

Fig. 3

INVENTOR
GEORGE A. GRUSS
BY Russell L. Root
ATTORNEY

Nov. 30, 1971 G. A. GRUSS 3,623,426

PRINT CONTROL MEANS IN TRAVELING ROLLER BED AND CYLINDER PRINT MACHINES

Filed Oct. 27, 1969 3 Sheets-Sheet 3

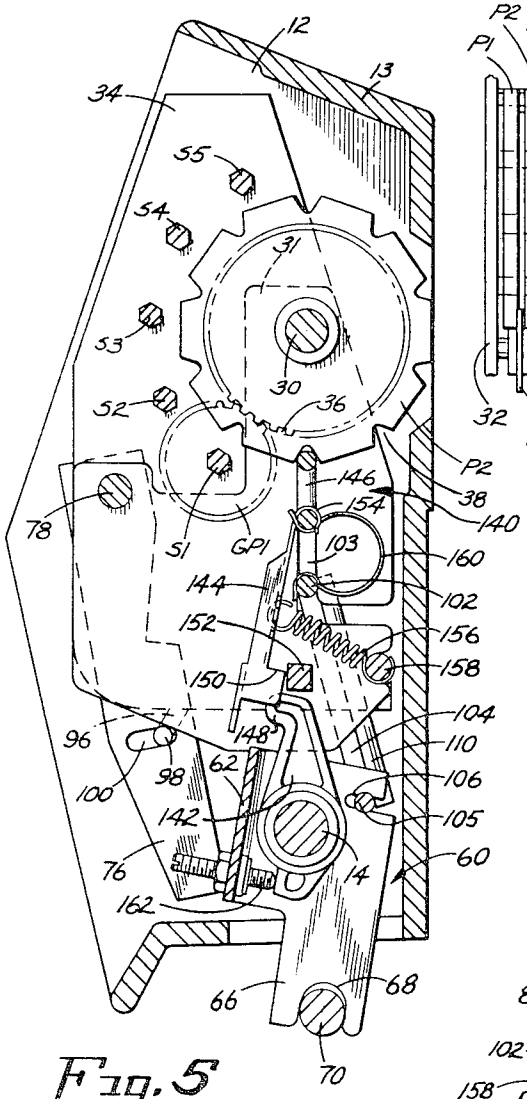


Fig. 5

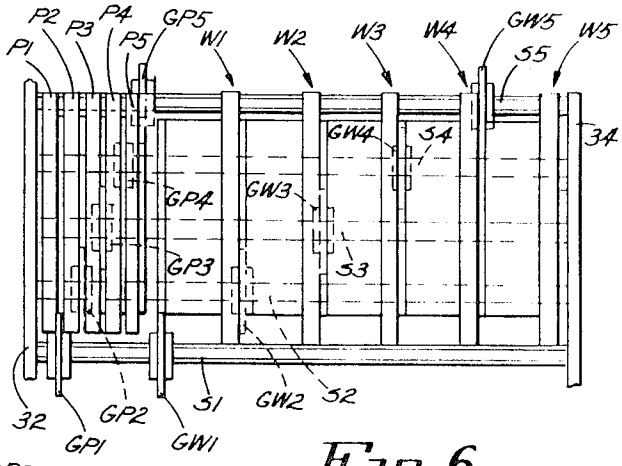


Fig. 6

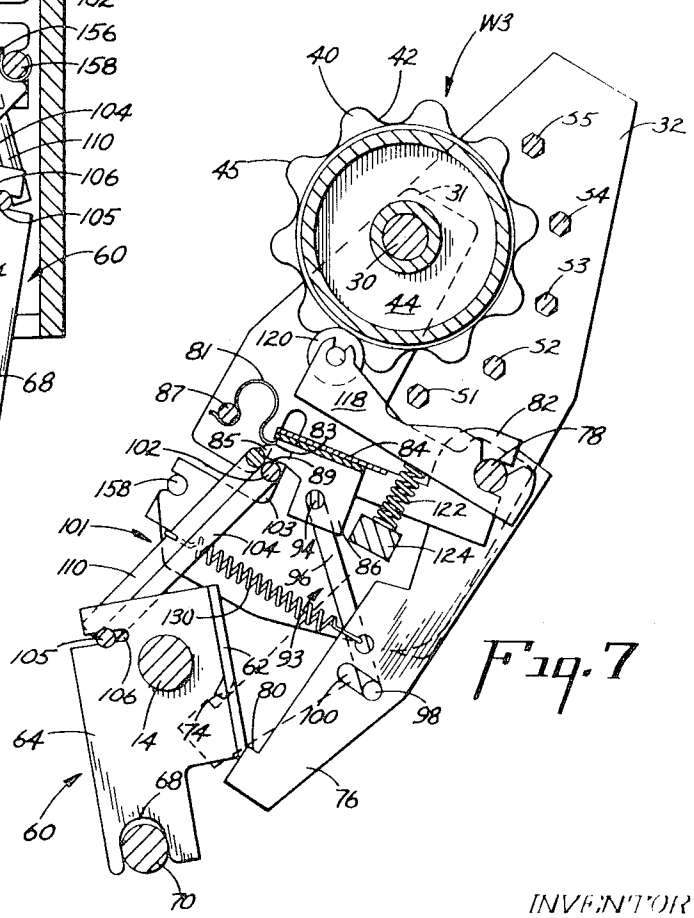


Fig. 7

INVENTOR
GEORGE A. GRUSS
BY Russell L. Root
ATTORNEY

United States Patent Office 3,623,426
Patented Nov. 30, 1971



3,623,426

# PRINT CONTROL MEANS IN TRAVELING ROLLER BED AND CYLINDER PRINT MACHINES

George A. Gruss, Mentor, Ohio, assignor to Addressograph-Multigraph Corporation, Cleveland, Ohio

Continuation-in-part of application Ser. No. 705,092, Feb. 13, 1968, now Patent No. 3,494,282, dated Feb. 10, 1970. This application Oct. 27, 1969, Ser. No. 869,540
Int. Cl. B41j 1/22
U.S. Cl. 101—45 12 Claims

## ABSTRACT OF THE DISCLOSURE

A power operated data recorder in which a hinged rear section serves as a bed of the machine against which a roller platen is designed to act. A variable data printing unit is provided in the movable bed of the machine and includes a plurality of print wheels, settable by manually actuated indexing wheels, for imprinting variable data on the form. The data recorder also includes lock-out means to prevent closing of the movable bed, or movement of the roller platen through a printing stroke, in those instances where the variable data print wheels have not been repositioned from an immediately preceding printing operation. Movement of only a single print wheel is effective to release the locking means to thereby permit operation of the machine.

## CROSS REFERENCES

This application is a continuation-in-part of our copending application Ser. No. 705,092, filed Feb. 13, 1968, now Pat. No. 3,494,282, issued Feb. 10, 1970.

## BACKGROUND OF THE INVENTION

Data recorders are currently being used in a wide variety of applications for imprinting various types of forms, documents and the like. In many cases these data recorders include roller platens and are desgined for a manual operation wherein the operator grasps the platen carriage and causes the roller to pass over a form and a printing member lying on the bed to cause an impression of the data on the printing member to be made on the form.

Data recorders of the forgoing kind have met with a certain amount of success, although the manual operation associated with these machines, and the fact that the same machine is frequently operated by various people during a normal work period, result in non-uniformity in the quality of the printed impressions on the forms. Also, in those cases where the data recorders are utilized for fairly high production by a single operator, the manual actuation of the machines becomes tedious and undesirable.

An electrically operated data recorder which avoids the problem of non-uniformity implicit in manual operation, but which can still be provided in a price range such that effective use for ordinary data recorder purposes is not precluded, is disclosed in Pat. No. 3,420,171, issued Jan. 7, 1969. As shown therein, the data recorder includes a bed section hinged to a base to provide an open-throat for the reception of the embossed card and the form to be printed. The platen is automatically set in printing motion when the bed is pivoted to closed position against the base and, on completion of a printing stroke, the bed is automatically opened to avoid double imaging of the form as the platen moves back to its home position.

An object of the present invention is to provide a data recorder of the kind, for example, disclosed in the above patent, but which also includes a variable data printing unit for imprinting numerals form manually positionable variable print wheels, and a lock-out means to prevent



closing of the bed against the base to perform a printing operation unless at least one of the print wheels has been reset following a previous printing operation.

The data recorder of the present invention provides for imprinting onto a form fixed data from a customer's credit card and variable data from selectively settable print wheels. The fixed data may include the name and address of the customer and an account number, and the variable data may pertain to, for example, the money amount of the sales transaction. Advantageously, the account number on the credit card and the numerals on the variable amount print wheels may be stylized characters of the kind used for optical character recognition or magnetic ink character recognition (MICR). In this way, the forms printed on the data recorder can be processed accurately and rapidly with automatic data processing equipment.

The data recorder of the present invention also includes a novel lock-out arrangement to precent operation of the data recorder in the event that the operator forgets to reset the variable data print wheels after each printing operation. To eliminate the possibility that the store clerk, station attendant, etc. may record a new sales transaction using the information set into the variable data print wheels for a previous transaction, the present machine requires that at least one of the print wheels be moved or reset before the bed can be closed against the base and an impression on the form can be made.

The data recorder of the present invention also includes novel positioning means for positioning the print wheels to the desired setting, and sensing means controllingly associated with the positioning means for conditioning the machine for either a printing operation or to prevent a printing operation.

Other objects, features and advantages will appear hereinafter as the description proceeds.

In the drawings:

FIG. 1 is a front-right perspective of an electrically operated data recorder constructed in accordance with the present invention in idle position with the bed open;

FIG. 2 is a face view of the bed layout;

FIG. 3 is a front elevation of the bed with portions of the bed frame broken away to expose a variable data printing unit showing the parts as they appear after the bed is closed and just before the printing stroke has begun;

FIG. 4 is a section taken on the line **4—4** of FIG. 3 but showing the parts as they appear when the bed has been moved slightly towards closed position from open position, but is latched against closing;

FIG. 5 is a section taken on the line **5—5** of FIG. 3;

FIG. 6 is a front elevation, in schematic and on a reduced scale, of a gear drive means for setting the variable data print wheels; and

FIG. 7 is a section similar to FIG. 4, but omitting the bed frame and showing the parts as they appear when the bed is in fully opened position, and unlatched and ready to be closed, with the alternate position of the latch shown in broken lines.

## DESCRIPTION OF THE PREFERRED EMBODIMENT

As shown in FIGS. 1, 3, 4 and 5, the data recorder of the present invention comprises a base **10** and a hinged bed **12** including a frame **13**, adapted for movement between open and closed positions, pivotally supported on a shaft **14** provided in the base. With reference also to FIG. 2, the bed provides an anvil **16** for supporting thereon an embossed credit card CR, a station plate SP, a rotary dater RD, and variable data print wheels indicated generally at **18**. Finger operated indexing or thumb wheels, as indicated generally at **20**, are provided for selectively positioning the print wheels, and a form gauge **22** for

retaining a form to be imprinted is likewise provided. The credit card CR is positioned within a cavity **24** provided in the anvil and is held in place by a flexible spring member **26** which engages the upper portion of the face of the card outside of the embossed area. A finger recess **28** is also provided in the bed to facilitate placement and removal of the card CR.

Before proceeding further with the description of the present invention, it should be pointed out that the power drive mechanism and roller platen assembly of the present machine are substantially the same as that disclosed in the aforementioned Pat. No. 3,420,171 and, therefore, a detailed description and illustration thereof are not included herein. Briefly, in the operation of the machine, movement of the bed **12** to closed position is effective to close a switch and energize a motor. The motor, through a crank arm and drive fork, drives the roller platen through a printing operation (from left to right as viewed in FIG. 2) across the bed of the machine. When the roller platen reaches the end of its printing stroke at the right end of the machine, the bed **12** is caused to open. However, the motor remains energized to drive the roller platen back to its start position, with the bed open to prevent double imaging of the form. In response to the roller platen reaching its start position, the switch is opened to shut off the motor and stop the machine.

The present invention is directed to a novel variable data printing unit including a print wheel retaining and aligning device, and a lock-out arrangement to prevent operation of the machine if at least one of the variable data print wheels is not reset following a preceding printing operation, for use with, for example, a data recorder of the kind disclosed in the above referred to patent. Accordingly, for brevity and ease of understanding, this disclosure covers only the novel inventive features over and above those of the above patent.

With reference to FIG. 3, there is shown in detail the relationship of the various parts of the variable data printing unit and lock-out mechanism as they appear when the bed **12** is closed against the base and just prior to a printing operation. This is a self-contained assembly which can be mounted or removed from the machine as a unit.

The variable data print wheels **18** and the indexing wheels **20** are rotatably mounted on a fixed shaft **30** supported in a pair of side plates **32** and **34** and an auxiliary side plate **31**. Although only five print wheels are shown, indicated at **P1**, **P2**, **P3**, **P4** and **P5**, and five corresponding indexing wheels indicated generally at **W1**, **W2**, **W3**, **W4** and **W5**, it will be understood that this is merely representative and the machine may be provided with any number of such wheels. Also, since the set of mechanism comprising an indexing wheel, corresponding print wheel and associated mechanisms related to each digit are identical in operation with those related to other digits, only one set will be described hereinafter.

The print wheels **P1–P5** are preferably made of molded plastic and include type faces bearing printing characters 0–9. Also, each print wheel is provided with an integral pinion such as **36**, and a notch or groove **38** between each of the type faces for positioning and aligning the print wheels as will be further explained below.

The indexing wheels **W1–W5** each include an actuating flange such as **45** having a serrated periphery providing a plurality of uniformly spaced projections **40** and detent notches **42**, see FIGS. 4 and 7. Additionally, each indexing wheel is provided with a hub **44** having gear teeth **46** at one end thereof. Each of the indexing wheels is also preferably made as a unitary member of molded plastic. The hubs **44** are further provided with digits 0–9 corresponding to the digits on the print wheels, and covers **48** (see FIG. 4) having windows **50** therein enclose the indexing wheels such that only the digits selected for printing are exposed through the windows. As shown in FIG. 3, the cover **48** has only been shown in association with the indexing wheels **W3** and **W4**, but it is to be understood that a cover also encloses each of the other indexing wheels.

With reference to FIGS. 3, 4 and 6, it will be seen that each indexing wheel such as **W4** and corresponding print wheel such as **P4** have associated therewith a shaft such as **S4** which is rotatably mounted in the side plates **32** and **34**. The shaft **S4** is provided with a pinion **GW4** fixed on the shaft and in mesh with the gear teeth **46** on the hub of the indexing wheel **W4**, and a second pinion **GP4** fixed on the shaft and in mesh with the pinion such as **36** of the print wheel **P4**.

It will be appreciated that similar shafts and pinions are associated with each pair of indexing and print wheels, as shown in FIG. 6, as follows:

**P1** and **W1** are associated with a shaft **S1** and pinions **GP1** and **GW1** respectively;

**P2** and **W2** are associated with a shaft **S2** and pinions **GP2** and **GW2** respectively;

**P3** and **W3** are associated with a shaft **S3** and pinions **GP3** and **GW3** respectively; and

**P5** and **W5** are associated with a shaft **S5** and pinions **GP5** and **GW5** respectively.

Thus, manual rotation of the indexing wheels to select the desired digits to be printed is effective through the gear drive arrangement to position the selected digits on the corresponding print wheels. This arrangement has not only proved to be reliable in operation but, also, the staggered positions of the gears with respect to the indexing and the print wheels permits construction of a compact variable data printing unit.

The lock-out mechanism, to prevent closing of the movable bed **12** in all instances where at least one of the variable data print wheels has not been reset following a printing operation, will now be described with reference to FIGS. 3 and 4. As shown therein, the mechanism comprises a bracket indicated generally at **60** and including a back wall **62** and depending legs **64** and **66**. The bracket is supported on the shaft **14**, and the legs are each provided with bifurcated ends **68** which embrace a tie-bar **70** in the bed **12** to prevent the bracket from rotating. The back wall **62** is provided with a slot **72** terminating at its upper end in a locking lip **74**.

A locking link or lock-out latch **76** is pivotally mounted on a shaft **78** fixed in the side plates **31** and **34** of the bed **12**, and extends downwardly towards the bracket **60**. The end of the latch adjacent the bracket is provided with a ledge **80** adapted to coact with the lip **74** as will be further explained below.

The latch **76** is movable with respect to the bed **12** to an active position such that while the bed is closed the latch is rendered potentially effective in relation to the lip **74** and when the bed is opened the latch takes effect in relation to the lip so that the bed is prevented from being moved to its closed position, and movable to an unlocked position to permit closing of the open bed.

An interposer **82** is pivotally mounted on the shaft **78** and extends between the side plate **34** and the latch **76**. The interposer includes a top shelf **84**, depending end walls **86** and **88** and a U-shaped bracket **85** fastened to the underside of the top shelf to provide a pair of spaced apart depending legs **90** and **92**.

A U-shaped, overcenter retaining spring **81** is also associated with the interposer **82** and, as shown in FIG. 4, has one end in engagement with a notch **83** provided in each of the legs of the bracket **85** and the other end secured to a rod **87** mounted in the side plates **31** and **34**. The spring **81** is adapted to hold the interposer **82** in either of two stable positions as will be further described hereinafter.

A first actuator member indicated generally at **93** interconnects the latch **76** with the interposer **82** and, as shown in FIGS. 3 and 4, includes a straight section **94** passing through openings in the end walls **86** and **88** of the interposer and openings in the legs **90** and **92** of the

bracket **85**, and a downwardly inclined section **96** terminating in a right angle extension **98** which enters an elongate slot **100** provided in the latch **76**.

A second actuator member indicated generally at **101** is also provided and comprises a straight section **102** extending between the side plates **32** and **34** with each end thereof being guided in a slot **103** in the side plates (only one slot being shown in FIGS. 4 and 7), a downwardly inclined section **104** passing on the outside of the side plate **32**, a short straight section **105** extending through keyhole slots **106**, **106** in each of the legs of the bracket **60**, and an upwardly inclined and then angled tail section **108** terminating short of the side plate **34**.

As best shown in FIG. 3, a brace **110** is spotwelded to the actautor **101** to provide rigidity thereto, and the section **105** is provided with a pair of crimped flat sections **107**, **107** to permit assembly and to prevent the actuator **101** from disengaging with the keyhole slots **106**, **106** in the bracket **60**.

The lock-out mechanism described thus far is controllably associated with a plurality of sensing and detent devices **116**, one of which can be seen in FIG. 4, each comprising a sensing cradle **118** and a sensing and detent roller **120**. It is to be understood that an identical sensing device **116** is associated with each of the indexing wheels W1–W5 and, therefore, only the sensing device coacting with the indexing wheel W3 will be described hereinafter.

The sensing cradle **118** is pivotally supported on the shaft **78** and extends forwardly therefrom with its bottom surface resting on the top shelf **84** of the interposer **82**, and the forward end of the cradle rotatably supports the sensing roller **120** for engagement with the projections **40** and the detent notches **42** of the actuating flange **45** of the corresponding indexing wheel. The sensing cradle is urged upwardly to maintain the sensing roller against the flange by a spring **122** positioned between a fixed bar **124** and the bottom surface of the cradle, the bar **124** being supported in the side plates **31** and **34**.

The operation of the lock-out mechanism will be described with special reference to FIG. 4 wherein the bed **12** has started to close but is held latched against closing, and FIG. 7 in which the bed is open but unlatched. The usual position of the parts with the bed open is shown in FIG. 4, except that the bed would be pivoted slightly further clockwise and the latch **76** would be slightly spaced from the lip **74** as shown in broken lines in FIG. 7. In this condition, rotation of any one of the indexing wheels W1–W5 causes one of the projections **40** on the flange **45** of the indexing wheel to act against its sensing roller **120** to thereby pivot the cradle in a counterclockwise direction. As the cradle is pivoted it acts against the top shelf **84** of the interposer **82** to pivot the interposer in the same direction against the bias of the overcenter spring **81**, to a latch unlocking position wherein an edge **89** on each of the end walls **86** and **88** of the interposer is resting on the section **102** of the actuator **101**. The sensing roller **120** continues to be maintained in engagement with one of the detent notches **42** on the flange of the indexing wheel by the spring **122** acting against the bottom surface of the sensing cradle **118**.

Pivoting of the interposer **82** moves the actuator **93** such that its extension **98** acts against one end of the slot **100** in the latch **76** causing the same to rotate in a counterclockwise direction to the position shown in solid lines in FIG. 7 against the bias of a spring **130**. This rotation imparted to the latch is effective to withdraw the ledge **80** of the latch so that its path will not encounter the locking lip **74** provided on the bracket **60**, to thereby permit closing of the bed **12** against the base **10**. The latch **76** is held in the unlocked position shown in FIG. 7, as a result of the overcenter spring **81** acting downwardly on the interposer **82**, until such time as the bed is closed.

As the bed **12** is moved to closed position, its pivoting motion relative to the actuator **101** is such that the section **102** of the actuator acts upwardly against the edges **89** of the interposer **82**, thereby rotating the interposer in the opposite direction until it is again in contact with the underside of the cradle **118**. This, however, occurs after the latch has proceeded to the point where it has already cleared the lip **74**. The interposer is held in this latch permitting position (FIG. 4) by the overcenter spring **81** which is now acting upwardly against the interposer. During this rotation of the interposer, of course, the actuator **93** is also restored to the position shown in FIG. 4 and, with the ledge **80** of the latch free of the lip **74**, the latch merely rides over the surface of the back wall **62** of the bracket **60** to permit the bed to be moved to fully closed position against the base.

On completion of a printing operation, the bed is automatically opened in a previously known manner as shown in Patent No. 3,420,171, whereupon the actuator **101** is restored to its inactive position at a low point in the slot **103**, and the latch **76** is urged towards the bracket **60** by the spring **130** until the ledge **80** of the latch snaps over the lip **74** and returns to a position such as shown in dotted lines in FIG. 7. At this point, the bed **12** is latched in the open position and cannot be closed to perform another printing operation until at least one of the variable data print wheels is reset by means of the indexing wheels. Any attempt to close the bed would bring the parts into the position of FIG. 4 with the ledge **80** of the latch **76** against the lip **74** so that further counterclockwise motion of the bed **12** is precluded.

It will be seen that the machine is conditioned to permit or to prevent a printing operation depending on the position of the interposer **82**. Thus, as long as the interposer is in contact with the sensing devices **116**, specifically the underside of the sensing cradles **118**, the bed **12** cannot be closed and a printing operation is prevented. However, movement of any one of the sensing devices, through the indexing wheels, is effective to actuate the interposer and move it out of contact with the sensing devices thereby actuating the conditioning means (i.e., the members **76** and **93**) permitting closing of the bed and the making of a printed impression on a form.

While the novel lock-out mechanism, disclosed in detail hereinabove, is reliable in operation and well adapted to a compact data recorder, it will be recognized that this is but one form of lock-out mechanism that may be utilized in the machine of the present invention.

Thus, the lock-out mechanism could be in the form of an electrical control such as a switch in the circuit of the motor which drives the roller platen through the printing stroke. This switch would, of course, be actuated by the interposer **82**, whereby the platen is prevented from being moved through a printing stroke, even though the bed is in closed position, unless at least one of the print wheels is reset following a preceding printing operation.

A print wheel retaining and aligning device indicated generally at **140**, to accurately position and hold the print wheels against movement during a printing operation, will now be described with reference to FIGS. 3 and 5. The device **140** comprises a trip means in the form of a tappet **142** free on the shaft **14**, a bail retaining latch **144** and a print wheel aligning and locking bail **146**.

The bail **146** is adapted to be moved between an active position in which it is engaged in the notches **38** in the print wheels, as shown in FIGS. 3 and 5, and an inactive position in which it is disengaged from the print wheels in response to closing and opening of the bed **12** respectively. The trip means, in response to closing of the bed **12**, releases the latch **144** to allow movement of the bail **146** into engagement with the print wheels.

The tappet **142** is provided with a nose **148** adapted to act against the latch **144**, and the latch is provided with a pair of ears **150** which coact with a bar **152** fixed in the side plates **31** and **32**. The latch is also provided with a curved retaining lip **154** for attaching the latch to the bail.

The bail **146** is preferably made of plastic and is in the form of a rod having a round cross section and is formed

into an elongate loop shape, and the lip **154** of the latch **144** snaps onto the bail such that the latch depends from the bail as shown in FIG. 5. The latch **144** is biased towards the bar **152**, in a counterclockwise direction as viewed in FIG. 5, by a spring **156** secured at one end to a rod **158** fixed in the side plates **31** and **32**. Further, a U-shaped, leaf type compression spring **160** is secured at one end to the bail and at the other end to the section **102** of the actuator **101**, previously described in connection with the lockout mechanism, and acts as a link between them.

Thus, with the bed **12** in the closed position shown in FIG. 5, and with the bail in pressure engagement with the aligned grooves **38** in the print wheels, due to deflection of the spring **160**, the pivoting motion of the bed to its open position on completion of a printing operation causes the bail retaining latch **144** to move downwardly relative to the bed, in response to the downward movement of the actuator **101** to its inactive position as mentioned above. As the actuator is moved it relaxes the spring **160** and, through the spring, withdraws the bail **146** out of engagement with the print wheels, until such time as the latch **144** is lowered to a position whereby the urging of the latch by the spring **156** causes the ears **150** of the latch to move into locking engagement with the bottom surface of the bar **152**. Further travel of the bed to its fully open position causes the lockout latch **76** to lock the bed against closing as heretofore described and, until the bed is again closed, the bail retaining latch **144** effectively holds the bail **146** disengaged from the print wheels.

When the bed is moved to closed position, the pivoting movement of the bed causes the tappet **142** to act against a push rod in the form of a screw **162** provided in the bracket **60**, thereby pivoting the tappet in a counterclockwise direction as view in FIG. 5. This motion of the tappet results in the nose **148** thereof pushing against the latch **144** and moving it to a position where the ears **150** are out of engagement with the bar **152**. As soon as the ears are free of the bar, the spring **160** urges the bail **146** upwardly and into engagement with the aligned notches **38** in the print wheels P1–P5.

The foregoing arrangement provides for the pre-alignment of the print wheels prior to the final alignment and retention afforded by the bail **146**, in order to prevent damage to the machine and erroneous impressions on the form if one of the print wheels were misaligned and the bed was allowed to close to perform a printing operation. Thus, the sequence of operation is such that as the bed is moved towards the closed position, the actuator **101** first acts upwardly against the interposer **82** to move it against the cradle **118**. This motion of the actuator striking the cradle insures that the sensing and detent roller **120** is seated in a detent notch **42** of the indexing wheel. With the sensing roller properly seated in the detent notch, the corresponding print wheel will also be properly positioned such that the notch **38** in the print wheel is near enough to the ideal position to receive the bail **146**. Subsequently, upon further movement of the bed to its fully closed position, the latch **144** which has been holding the bail out of engagement with the print wheels is released by the tappet **142** to allow the spring **160** to move the bail into pressure engagement with the notches in the print wheels and provide perfect alignment.

In the unlikely event that one of the indexing wheels and its corresponding print wheel are not properly set, such that the sensing roller **120** is opposed to one of the projections **40** on the indexing wheel instead of seated in one of the detent notches **42**, and the wheel fails to line up under the nudging of the roller **120**, the action of the actuator **101** acting against the interposer **82**, cradle **118**, sensing roller **120** and projection **40** provides a solid obstruction preventing sufficient travel of the bed to allow it to move to closed position. This obstructing action takes effect at a point such that it prevents the trip means from releasing the latch **144** and moving the bail against the print wheels. Accordingly, until the misaligned indexing wheel is properly set so that the sensing roller is seated in the detent notch, there is no locking action on the print wheels by the bail **146**, nor can the bed be closed to perform a printing operation.

An overall description of the operation of the novel data recorder of the present invention will now be given, starting with the bed **12** in the open and locked position approximately as shown in FIG. 4. With the embossed credit card and a form to be printed in position on the anvil **16**, the machine operator rotates the indexing wheels W1–W5 to position the corresponding print wheels P1–P5 for printing the desired variable data. Rotation of any one of the indexing wheels releases the latch **76** as heretofore described, and the bed **12** is now free to be moved to closed position against the base **10**.

As the bed is closed, the actuator **101** strikes the interposer **82** and restores it to the position shown in FIG. 4 where it is held against the sensing device by the spring **81**. In response to the terminal portion of the bed closing motion, the tappet **142** acts upon the bail retaining latch **144** to release it so that the spring **160** can urge the bail **146** upwardly and into engagement with the aligned notches **38** of the print wheels as shown in FIG. 5. At this point the bed is fully closed initiating a printing operation in which the roller platen is driven across the bed to imprint the form. When the platen reaches the end of its travel in one direction, the bed is caused to open in a known manner so that no double imaging of the form will occur when the platen is returned to its start position.

Movement of the bed to the open position causes relative movement of the actuator **101** and the bail retaining latch **144** to thereby withdraw the bail **146** out of engagement with the print wheels. Further movement of the bed to open position causes the latch **144** to be drawn by the spring **156** into locking engagement with the bar **152**, and the lock-out latch **76** to be drawn by the spring **130** into a position to be in locking relationship to the lip **74**.

On removal of the imprinted form and the credit card, the machine is in condition to receive a new credit card and a blank form for another printing operation. However, if the machine operator fails to perform the operation of setting the variable data print wheels, the bed will be locked against closing thereby preventing a printing operation. Movement of any of the indexing wheels is effective to unlock the bed and permit it to be manually pivoted to its closed position.

From the foregoing, it will be seen that the present invention provides an electrically operated data recorder which is admirably suited to imprinting froms with fixed data from an embossed credit card and variable data from selectively positionable print wheels. It also provides novel means to prevent operation of the machine, by preventing the closing of the bed, either in those instances where the machine operator fails to set the print wheels for imprinting the variable data on the form, or when a wheel for any reason refuses to assume proper printing position. These combined features, plus the easy manipulation and the positive detenting means provided by the indexing wheels for accurately positioning the print wheels, result in a data recorder that is compact, reliable in operation, versatile in its use and relatively inexpensive to manufacture.

What is claimed is:

**1.** A power operated data recorder comprising:

a base;

a bed mounted on the base for movement between an open position for receiving printing elements and forms and a closed position for printing;

a platen associated with the base and movable across the bed in printing relationship therewith when the latter is closed;

motor means on the base for driving the platen through a printing stroke;

means to energize the motor means in response to closing of the bed;

means to release the bed and cause the same to open upon completion of a printing stroke of the platen;

a plurality of settable print wheels carried by the movable bed and located for printing cooperation with the platen when the bed is closed;

positioning means for setting each print wheel to a desired setting;

latch means mounted on the movable bed and movable with respect thereto to an active position such that while the bed is closed the latch means is rendered potentially effective in relation to a cooperating surface on the base and when the bed is thereafter opened the latch takes effect in relation to said surface so that the bed is prevented from being moved to its closed position, and movable to an unlocked position to permit closing of the open bed;

means responsive to movement of the bed to its closed position for setting the latch means in active position; and

means responsive to movement of any of the positioning means for moving the latch means to unlocked position.

2. A data recorder comprising:

a base;

a bed mounted on the base for movement between an open position for receiving printing elements and forms and a closed position for printing;

a platen associated with the base and movable through a printing stroke across the bed in printing relationship therewith when the latter is closed;

a plurality of settable print wheels in the bed located for printing cooperation with the platen when the bed is closed;

positioning means on the movable bed for setting each print wheel to a desired setting and accessible for manual operation when the bed is in open position;

latch means on the bed movable and spring urged towards a locking position in which the bed is prevented from being moved to its closed position responsive to movement of the bed to open position following a printing stroke of the platen across the bed, and movable to an unlocked position to permit closing of the bed;

interposer means on the bed cooperable with the latch means and movable between a latch permitting position and a latch unlocking position;

an actuator means acting between the base and the interposer means on the bed for moving the interposer means to its latch permitting position in response to closing of the bed; and

means responsive to movement of one of the positioning means for moving the interposer means to its latch unlocking position to permit closing of the bed in a succeeding printing stroke.

3. A data recorder as set forth in claim 2 in which the means for moving the interposer means to its latch unlocking position comprises sensing means located for contact with and operation by the positioning means.

4. A data recorder as set forth in claim 3 in which there is provided retaining means for holding the interposer means in either of its two positions.

5. A data recorder as set forth in claim 3 in which the positioning means comprises manually engageable indexing wheels provided with detent notches with which the sensing means is adapted to move into and out of engagement.

6. A data recorder as set forth in claim 5 which also includes aligning means associated with the actuator means and movable into engagement with the print wheels for aligning the print wheels in response to closing of the bed, and movable out of engagement with the print wheels to permit setting thereof when the bed is moved to its open position.

7. A data recorder as set forth in claim 6 in which the aligning means includes a bail spring urged towards wheel engaging position, and in which there is provided bail latching means for holding the bail means out of engagement with the print wheels, and trip means responsive to closing of the bed for releasing the bail latching means to allow movement of the bail means into engagement with the print wheels.

8. A data recorder as set forth in claim 1 in which the positioning means comprises:

a pinion integral with each of the print wheels;

a first set of gear wheels associated one with each said pinion and in mesh therewith;

a rotatable indexing wheel associated with each said print wheel and having gear teeth integral therewith;

a second set of gear wheels associated one with each of said indexing wheels, in mesh with the gear teeth thereon, and in driving relationship with that gear wheel of the first set meshing with the pinion on the associated print wheel;

detent means associated with each said indexing wheel for releasably retaining the print wheel in the selected position;

each said indexing wheel being effective upon movement thereof to position the corresponding print wheel to the desired setting.

9. A data recorder comprising:

a base;

a bed mounted on the base for movement between an open position for receiving printing elements and forms and a closed position for printing;

a platen associated with the base and movable into printing relationship with the bed when the latter is closed;

a plurality of settable print wheels in the movable bed located for printing cooperation with the platen when the bed is closed, said print wheels having aligning notches therein;

positioning means on the movable bed for setting each print wheel to a desired setting comprising:

a pinion integral with each of the print wheels;

a first set of gear wheels associated one with each said pinion and in mesh therewith;

a rotatable indexing wheel associated with each said print wheel and having gear teeth integral therewith;

a second set of gear wheels associated one with each of said indexing wheels, in mesh with the gear teeth thereon, and in driving relationship with that gear of the first set meshing with the pinion on the associated print wheel;

detent means associated with each said indexing wheel for releasably retaining the print wheel in the selected position;

latch means on the movable bed and spring urged towards a locking position in which the bed is prevented from being moved to its closed position, and movable to an unlocked position to permit closing of the bed;

interposer means on the bed cooperable with the latch means and movable between a latch permitting position and a latch unlocking position;

an actuator means acting between the base and the interposer means on the bed for moving the interposer means to its latch permitting position in response to closing of the bed;

sensing means responsive to movement of one of the positioning means for moving the interposer means to its latch unlocking position;

retaining means for holding the interposer means in either of its two positions; and

print wheel aligning means associated with the actuator means and movable into engagement with the print wheel notches for aligning the print wheels in re-

sponse to closing of the bed, and movable out of engagement with the print wheels in response to movement of the bed to its open position.

**10.** A power operated data recorder comprising:

a base;

a bed mounted on the base for movement between an open position for receiving printing elements and forms and a closed position for printing;

a platen associated with the base and movable across the bed in printing relationship therewith when the latter is closed;

motor means on the base for driving the platen through a printing stroke;

means for energizing the motor means in response to closing of the bed;

locking means for locking the bed firmly in the closed position in opposition to the printing pressure exerted thereagainst by the platen;

means for releasing the locking means and causing the bed to move to open position upon completion of a printing stroke of the platen;

a plurality of settable print wheels carried by the movable bed and located for printing cooperation with the platen when the bed is closed;

positioning means on the movable bed for setting each print wheel to a desired setting and accessible for manual operation when the bed is in open position;

means normally preventing the bed from being moved to closed position responsive to movement of the bed to open position following a printing stroke of the platen across the bed, but selectively positionable so as to permit such motion of the bed; and

means responsive to movement of any of the positioning means on the movable bed for selectively positioning the bed closure preventing means in the position to permit closing of the bed in a succeeding printing stroke.

**11.** A power operated data recorder comprising:

a base;

a bed mounted on the base for movement between an open position for receiving printing elements and forms and a closed position for printing;

a platen associated with the base and movable across the bed in printing relationship therewith when the latter is closed;

motor means on the base for driving the platen through a printing stroke;

means for energizing the motor means in response to closing of the bed;

means for locking the bed firmly in the closed position in opposition to the printing pressure exerted thereagainst by the platen;

means for releasing the locking means and causing the bed to move to open position upon completion of a printing stroke of the platen;

a plurality of settable print wheels carried by the movable bed and located for printing cooperation with the platen when the bed is closed;



positioning means on the movable bed for setting each print wheel to a desired setting and accessible for manual operation when the bed is in open position;

means normally preventing motion of the platen through a printing stroke when the bed is initially closed responsive to a previous printing stroke of the platen across the bed, but selectively conditionable so as to permit such motion of the platen; and

means responsive to movement of any of the positioning means on the movable bed for selectively conditioning the platen motion preventing means in the condition to permit motion of the platen in a succeeding printing stroke.

**12.** A power operated data recorder comprising:

a base;

a bed mounted on the base for movement between an open position for receiving printing elements and forms and a closed position for printing;

a platen associated with the base and movable across the bed in printing relationship therewith when the latter is closed;

a plurality of settable print wheels carried by the movable bed and located for printing cooperation with the platen when the bed is closed;

positioning means on the movable bed for setting each print wheel to a desired setting and accessible for manual operation when the bed is in open position;

motor means on the base for driving the platen through a printing stroke to take an impression from the settable print wheels;

means for locking the bed firmly in the closed position in opposition to the printing pressure exerted thereagainst by the platen;

means for releasing the locking means and causing the bed to move to open position upon completion of a printing stroke of the platen; and

means for preventing the taking of an impression from the print wheels by the platen responsive to completion of a previous impression unless at least one of the settable print wheels has been moved since the previous impression, which means is disposed on the movable bed and is responsive to movement of any of the positioning means to defeat the prevention action in a succeeding printing stroke.


**References Cited**

UNITED STATES PATENTS

| | | | |
|---|---|---|---|
| 3,322,062 | 5/1967 | Maul | 101—269 |
| 3,334,582 | 8/1967 | Mahoney | 101—45 |
| 3,405,634 | 10/1968 | Maul | 101—45 |
| 3,420,171 | 1/1969 | Maul et al. | 101—283 X |
| 3,494,282 | 2/1970 | Gruss | 101—45 |
| 3,508,488 | 4/1970 | Maul et al. | 101—45 |



WILLIAM B. PENN, Primary Examiner

U.S. Cl. X.R.

101—269, 285, 99