June 30, 1959 A. FERRI ET AL 2,892,308

WATER SPRAY COOLING METHOD AND APPARATUS FOR SUPERSONIC NOZZLE

Filed April 19, 1957

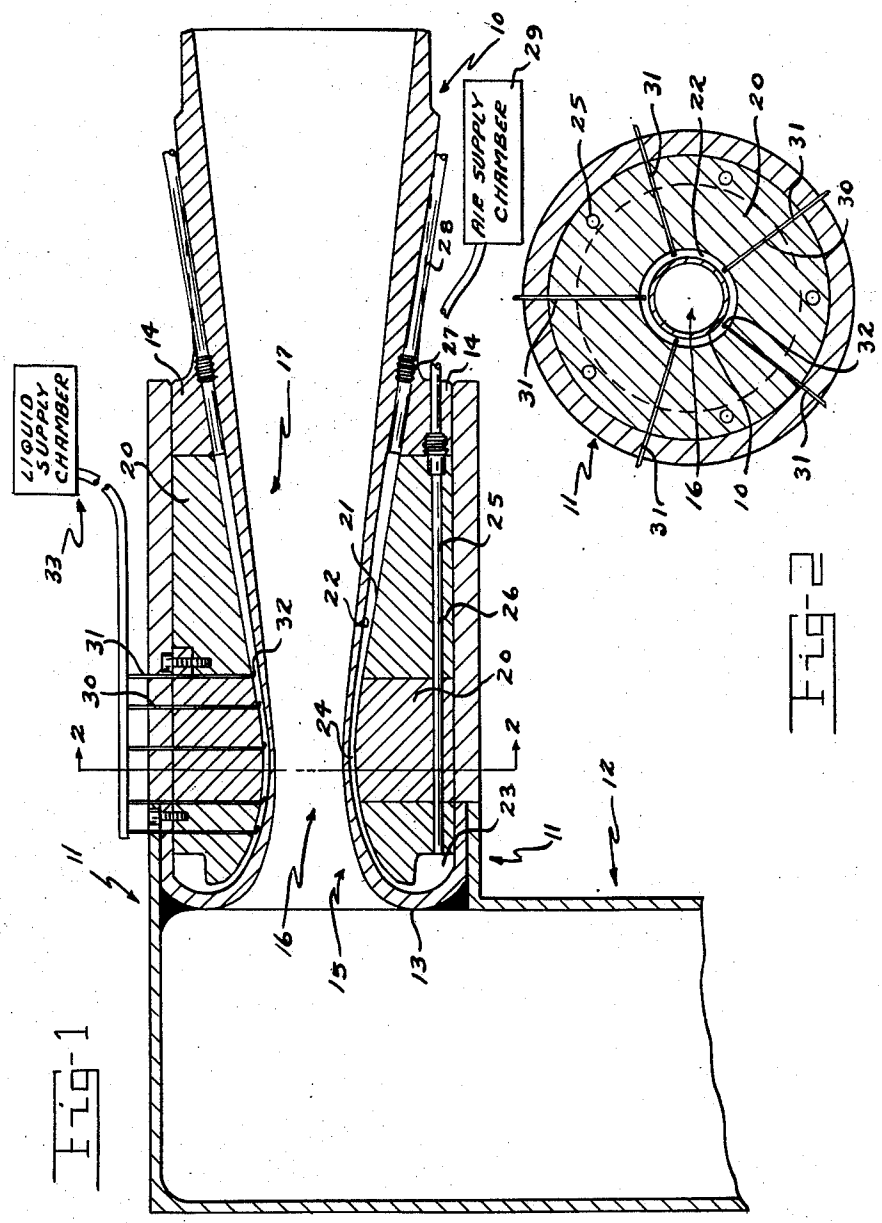

Fig-1

Fig-2

INVENTORS
MARTIN H. BLOOM
ANTONIO FERRI
PAUL A. LIBBY

BY Wade Hoonty and John E. Reilly
ATTORNEY

United States Patent Office 2,892,308 Patented June 30, 1959

2,892,308

WATER SPRAY COOLING METHOD AND APPARATUS FOR SUPERSONIC NOZZLE

Antonio Ferri, Rockville Centre, Paul A. Libby, Freeport, and Martin H. Bloom, Woodmere, N.Y., assignors to the United States of America as represented by the Secretary of the Air Force

Application April 19, 1957, Serial No. 654,049

5 Claims. (Cl. 60—35.6)

The present invention relates to a method and apparatus for the rapid and efficient cooling of a high speed flow nozzle or conduit; and more particularly, relates to the cooling of supersonic flow nozzles and the like by a coolant, low energy combined gas and liquid stream directed over the exterior surface of the nozzle wall.

In cooling high temperature wall structures, especially those forming conduits or nozzles for the high speed, high heat energy flow of compressible fluids, the thermal and mechanical stresses developed in the wall by the high energy stream present many difficulties. A high temperature on the inner surface of the wall tending to expand the wall, countered by a low temperature on the cold side causing contraction of the wall, creates severe stresses across the wall which at high temperature and pressure differential tend to fracture or shear the wall structure. The use of an extremely thin wall to eliminate the temperature gradient across the wall has been proposed; however, where a high pressure gradient exists between the main stream and cooling stream, it is not possible to use a thin wall structure.

Among other standard cooling methods, both regenerative and evaporative cooling have been proposed as a solution of the cooling problem, particularly in rocket motor construction. Unfortunately, the boiling instability of liquid streams within a high temperature passage renders the above types and other similar cooling liquid methods impractical for extremely high speed cooling.

Cooling and efficient heat absorption become an especially acute problem in supersonic flow nozzles. The major design factor is concerned with the heat transfer at the throat area of the nozzle. As an example, with an air stream entering the throat area of the nozzle at 3,000° R. and at 600 p.s.i. for acceleration up to sonic speeds followed by expansion up to supersonic and hypersonic speeds, it is necessary to transfer exceedingly high amounts of heat away from a very small throat area. With a greater wall thickness to withstand the pressure, it is impossible to rapidly conduct the heat away from the throat area. With a thin walled throat area, of course the pressure conditions become critical. Also, in supersonic and hypersonic flow nozzles the nozzle wall must be extremely rigid and smooth to prevent development of shock waves in the air flow.

The present invention obviates the foregoing difficulties and problems and permits the use of a thin walled nozzle or conduit structure for the high speed, high energy flow of fluid with rapid and efficient cooling in providing for a method and an apparatus for the cooling and pressure equalization of the thin walled structure by passing a low energy stream over the outside surface of the nozzle at a Mach number equivalent to the Mach number in the high energy stream, and simultaneously intermixing a liquid spray coolant with the low energy stream, the liquid having a vaporization temperature below the wall temperature so as to establish additional cooling by evaporation.

It is, accordingly, an object of the present invention

to provide for the pressure equalizing, indirect cooling of a chamber or nozzle wall which is exposed to high velocity air streams at high stagnation temperatures and pressures.

It is another object to provide for the pressure and flow equalization, together with the indirect, rapid cooling of a thin walled, high temperature conduit exposed to high velocity, high energy fluid streams.

It is an additional object to provide for a high velocity coolant stream adjacent to a supersonic flow nozzle for the convective and evaporative cooling of the nozzle walls together with the flow and pressure equalization of a high energy fluid stream flowing through the nozzle.

It is another object to provide for a liquid saturated coolant air stream through a contoured passage along the exterior wall of a hypersonic flow nozzle with the coolant stream flow under conditions corresponding to conditions of a high energy stream through the nozzle.

It is an additional object to provide for a method for cooling the walls of supersonic and hypersonic flow nozzles in such a way as to maintain the walls at a constant temperature with negligible mechanical stresses during high energy stream flow at high stagnation temperatures and stagnation pressures through the nozzle.

It is a further object to provide for a low energy air stream over the exterior surface of an inner lining for a flow passage at a velocity and stagnation pressure equivalent to the velocity and pressure flow of a high energy stream flowing through the passage.

A still further object is the provision of a water sprayed, selectively controlled coolant air stream along the outer surface of an axially symmetrical nozzle wall at a velocity and stagnation pressure equivalent to the velocity and pressure of a high energy air stream flowing through the nozzle.

Other objects and features of the present invention will become apparent in view of the following description considered in connection with the accompanying drawings in which:

Fig. 1 is a sectional view of a hypersonic flow nozzle disposed in a wind tunnel to receive high stagnation temperature and pressure air from a heater section; and

Fig. 2 is a detailed, fragmentary view of the throat section of the preferred form of nozzle.

In Fig. 1 there is shown a preferred embodiment of a supersonic, axially symmetrical flow nozzle **10** disposed within a wind tunnel housing **11** with a forced air supply system **12** including a heater (not shown) disposed at right angles to the wind tunnel and nozzle.

As more particularly set forth in our copending application, Serial Number 645,878, filed March 13, 1957, it is now possible to supply air for hypersonic flow purpose at 600 p.s.i. and 3,000° R. These conditions have been found necessary in order to simulate free-flight conditions for Mach numbers ranging from 5 to 15; that is, to obtain full stagnation temperatures and pressures at the corresponding Mach number desired. In accelerating such a high temperature, high pressure air stream up to the desired Mach number, the present invention provides for the elongated, thin walled, axially symmetrical nozzle or effusor **10** consisting of a convergent entrance **15** at the entrance to the wind tunnel to receive the air from the exhaust section of the heater, followed by a throat section **16** and a gradually divergent test section **17** to further accelerate the air up to hypersonic speeds. For interconnection of the nozzle to the wind tunnel and to an outer wall **20**, to be described, support means are integrally formed with the nozzle including a forward, peripheral lip **13** verging radially outwardly then rearwardly from the entrance **15** and a circumferential shoulder portion **14** located adjacent the Mach 3 section of the

test section 17. The nozzle wall is composed of a suitable low carbon steel with a smooth, uniform nickel plating covering the inner surface thereof. Of course, other suitable, high temperature materials may be utilized, such as stainless steel.

Spaced between the tunnel housing 11 and the nozzle wall is the annular cooling jacket or outer wall 20 with inner surface 21 of the cooling jacket forming a specially designed, contoured cooling passage 22. The annular passage 22, which is defined by the exterior surface of the nozzle wall and the inner surface of the cooling jacket, is contoured so that the height of the passage varies proportionally with the diameter of the main flow passage at corresponding points along the nozzle and passage. The effective height and area of the cooling passage thus correspond with the effective diameter and area of the nozzle to obtain equivalent flow characteristics in the fluid streams. This construction is considered unique in that fluid flow in the cooling passage and main nozzle can be controlled to flow at equivalent Mach numbers and stagnation pressures; it is thereby possible to equalize the high pressure flow of the main stream through the nozzle by means of the coolant stream in the passage. At the same time, the coolant stream is conducting heat from the cold wall side of the nozzle substantially as rapidly as it is being transferred to the wall by the high energy main stream.

In that heat transfer conditions are critical along the nozzle wall from a point just ahead of the throat section up to the Mach 3 section in the nozzle, the cooling passage is extended substantially half-way along the divergent test section from the entrance into the nozzle. The cooling passage 22 is therefore formed of an annular manifold opening 23 which extends peripherally about the nozzle entrance 15 between the nozzle wall and outer wall, then converges rearwardly and inwardly into a restricted annular throat section 24 and diverges rearwardly along the nozzle test section and is terminated adjacent the Mach 3 section.

To obtain a rigid connection between the outer wall 20 and the nozzle, the outer wall is constructed in sections and positioned between the lip 13 and shoulder 14 of the nozzle. The sections are preferably welded to form the complete wall structure and connected to the outer end of the lip 13 and to the forward surface of the shoulder 14 by means of suitable weld or bolted connections. The entire assembly is then inserted into the wind tunnel housing and positioned adjacent the discharge chamber from the supply system 12.

Leading into the manifold 23 at circumferential, spaced intervals are coolant air supply pipes or hoses 26 which are passed through bores 25, each bore extending the length of the wall and through the shoulder 14 as shown. Each pipe is supplied with air from a suitable pressurized air storage supply source or chamber 29. At the rearward end of the cooling passage 22, a series of bores 27 are passed through the shoulder adjacent the nozzle wall for extension of exhaust pipes 28 into the exhaust end of the cooling passage to act as disposal outlets for the pressurized air stream leaving the cooling passage.

In high speed flow through supersonic speeds the heat transfer rates, particularly across the nozzle wall in the throat area can be efficiently absorbed by the coolant air stream alone and it is possible to maintain a low, constant wall temperature throughout the length of the passage. However, in hypersonic flow, the heat transfer rates become so critical that the wall thickness at the throat area would have to be impractically small in order to establish the necessary cooling by the air coolant stream alone. A unique manner of additional cooling is provided in the present invention to maintain the desired wall temperature, while at the same time making it possible to retain a reasonable wall thickness. For this purpose, a series of tube receiving openings 30 are spaced at axial and circumferential intervals through the outer wall 20 which project radially inwardly from the outer surface to the inner surface of the wall along the entrance and throat section. Extending through each of the openings 30 is a liquid-conducting tube 31 for projection into the cooling passage 22 with a small orifice or spray nozzle 32 connected to the passage end of each tube 31. The spray orifices are preferably fitted with an elbow fitting so that in connected position to the tubes, the orifices will be directed down stream in the direction of flow of the coolant air. At the opposite end of each tube 31 a water supply system including a chamber 33 is provided to supply water in pressurized form to the liquid conducting tubes. The supply chamber 33 is regulated to force water through the orifices at a pressure of 100 to 250 p.s.i. greater than the pressure of the coolant air stream at that point. In this way, finely divided droplets of water are sprayed evenly across the coolant stream so as to thoroughly intermix with the stream and provide optimum cooling by evaporation. Of course, thorough intermixing can also be obtained by impinging the atomized water transversely across the cooling passage into the coolant stream flow. Furthermore, it is to be noted that the combined air and liquid cooling achieved differs substantially from normal evaporative cooling in that the liquid which is forced in the form of a mist into the cooling passage is rapidly carried away by the high velocity, low energy coolant stream flow through the coolant passage. Thus, any excess liquid in the cooling passage is not permitted to remain in the high temperature area in order to prevent excessive heat build-up and boiling instability. In addition, it is possible to provide an excess amount of atomized water; since the pressure at each axial station is constant the wall temperature throughout the cooling passage will remain constant over a wide latitude of heat transfer rates, only the amount of vaporized water changing. In addition, since the discharge of the cooling passage is open to the atmosphere and the throat area flow is supersonic, the cooling is self-stabilizing over a wide range of heat transfer rates with little control necessary except for the amount of excess water.

In performing test operations the test model (not shown) is positioned in the tunnel housing at the rearward end of the divergent test section of the nozzle. In a nozzle designed for tests between Mach numbers 5 and 6 a high energy stream of air is prepared in the air supply system 12; for example, a stagnation temperature of 3,000° R. and stagnation pressure of 600 p.s.i. can be prepared for flow through the nozzle at a Mach number of 6 where the nozzle is one foot in diameter at the test section. For the required acceleration of a high energy air stream up to transonic speeds in the throat area upon discharge from the heater, the nozzle entrance converges into a throat diameter of 1.5 inches with a wall thickness of 0.120 inch and a throat passage diameter of 0.070 inch. Cool, ambient air is then directed from the air storage chamber through the hoses 26 into the cooling passage entrance or manifold 23 at a pressure corresponding to the high energy air stream pressure at the entrance to the throat section, thus defining a low energy air stream flowing through the cooling passage in substantially the same direction as the main stream. Due to the effectively similar contour of the cooling passage and main nozzle section, equalized pressure and flow in a substantially parallel, common direction is maintained between the main, high energy stream and the coolant, low energy stream. As previously mentioned the cooling passage is contoured from the entrance up to the Mach 3 section of the nozzle, and thus the high energy stream and low energy stream will have the same Mach numbers until the Mach number of 3 is reached. This causes a zero, or minimum pressure difference across the wall and therefore substantially negligible mechanical stresses. As the high energy air stream is accelerated from Mach 3 up to Mach 6 further cooling is normally not necessary

in that the static temperature of the air stream has gradually been reduced through expansion to a temperature below the critical wall temperature, and the wall thickness is sufficient to withstand the reduced pressure of the high energy stream.

As the air coolant stream is directed through the coolant passage 22, a finely divided water spray is simultaneously introduced into the cooling passage in the direction of flow of the stream and outwardly into it. The control of the amount of water atomized into the cooling passage not being critical, due to the continuous exchange and removal of water, it is only important that a sufficient amount of water be sprayed into the passage which will be in excess of the amount evaporated. This can be easily determined by considering the heat transfer across the wall for a given wall thickness and the amount of heat required to be absorbed over that amount absorbed by the air coolant stream.

It is to be understood, of course, that the cooling method as described has wide application to other areas of high temperature or high speed flow. Also for other purposes, it is entirely within the scope of the present invention to utilize other gases as the cooling stream and other liquids such as alcohol as the liquid coolant stream for the cooling of all types of compressible fluids and liquids. It is, of course, important that the evaporating temperatures of the liquid be lower than the wall temperature of the nozzle or conduit to be cooled. Therefore the above cooling method and apparatus is clearly conformable for jet, rocket motor and missile structures. In addition it is to be understood that the nozzle and wall construction can be very easily modified without departing from the principles of operation of the invention. For instance, other means for rigidly connecting the nozzle and cooling jacket together can be utilized, such as an outer shell or casing provided with means for delivery of the coolant air and liquid into the cooling passage. Furthermore, the above method, broadly, can be utilized for the cooling of any type of fluid flow conduit and either with or without the liquid spray dependent upon the heat transfer rates across the wall of the conduit. Therefore, other forms of construction may be very easily utilized, in place of the apparatus as described, to effect the desired coolant air and combined liquid spray streams, although the apparatus as described has been found to be particularly advantageous and efficient in carrying out the cooling operation.

Summarizing the advantages and primary features of the present invention, a method and apparatus for cooling the exterior surfaces of thin walled conduits or nozzles is provided which is particularly adaptable for the cooling of supersonic and hypersonic fluid flow conduits or nozzles by directing a low energy stream preferably in the direction of the high energy stream flow through a contoured passage adjacent the exterior surface of the conduit wall and at a Mach number corresponding to the Mach number in the high energy stream, and where necessary, simultaneously directing a liquid coolant into the low energy stream to cooperate with the low energy stream to maintain a constant wall temperature and pressure throughout the critical heat transfer portion of the conduit. With the method and apparatus as described, it is to be noted that the pressure equalization keeps the mechanical stresses at a minimum, permits a thinner wall structure and thus the higher wall temperature required for water evaporation. Furthermore, the heat of vaporization of the water is so high that large rates of heat transfer with small coolant flows can be brought about. In addition, the regulation of the cooling is greatly simplified in that the air is introduced at the same stagnation pressure as the main stream, and the amount of atomized water introduced is larger than necessary for cooling. Since the discharge of the cooling passage is open to the atmosphere and the throat area is in the sonic and supersonic flow range, the cooling is stabilized over a wide range of heat transfer rates with no control means necessary except for the amounts of excess water supply.

While we have described the preferred forms of our invention, it is to be observed that additional modifications may be devised utilizing the principle of cooling as set forth. Consequently, we wish to be limited not by the foregoing description which was given solely for purposes of illustration but only by the scope of the appended claims.

What is claimed is:

1. A cooling apparatus for a flow conduit through which a compressible fluid is directed at a high temperature and pressure, said cooling apparatus comprising: an outer wall having an inner surface disposed in predetermined, spaced relation to the exterior walls of the conduit to define a contoured, annular passage between the conduit and the outer wall conforming substantially to the contour of the conduit to include equivalent diameters in the annular passage and the conduit at predetermined points along the length of said passage, means for spacing said outer wall and the conduit in predetermined relation, means adapted to pass a low energy, coolant gas stream through said passage at rates of flow corresponding to the rates of flow of the high energy stream through the conduit at said predetermined points, and liquid conducting means communicating with said annular passage for spraying finely divided liquid into the coolant gas stream whereby the coolant gas and liquid spray are cooperable to maintain a constant temperature through the length of the passage.

2. A water spray, cooling apparatus for a hypersonic flow nozzle and the like wherein the nozzle is provided with a convergent entrance, a supersonic throat section and a divergent, hypersonic test section adaptable for accelerating a high energy gas stream through the nozzle to hypersonic speeds, said cooling apparatus comprising: an outer, cylindrical wall encircling the nozzle with the inner surface of the wall in predetermined relation with respect to the nozzle so as to define an annular passage surrounding the nozzle wall, said passage being selectively contoured in such a way that the axial Mach number distributions in said passage are substantially equivalent to that throughout the throat and divergent regions of the nozzle to equalize the high pressure flow through the nozzle; support means interconnecting the nozzle and said outer wall in rigid spaced relation, a series of air delivery hose members communicating with the forward end of said passage and adapted to deliver air under pressure into said passage, said outer wall including a series of radially inwardly extending tube receiving openings adjacent the throat section of the nozzle; and a series of liquid conducting tubes extending through said tube receiving openings and adapted to deliver liquid into said annular passage, each tube including a spray orifice at the passage end thereof for directing a liquid into said passage in the direction of coolant gas flow and at a pressure exceeding the pressure of the coolant air stream in the throat, whereby the coolant gas and liquid are adaptable to selectively reduce the wall temperature of said nozzle.

3. In a cooling apparatus for a supersonic flow nozzle and the like wherein the nozzle is provided with a convergent entrance, a restricted supersonic throat section and a divergent hypersonic test section adaptable for accelerating a high energy gas stream through the nozzle at supersonic and hypersonic speeds: an outer wall encircling the nozzle with the inner surface of the wall in predetermined, spaced relation with respect to the nozzle so as to define a contoured passage adapted to receive a low energy gas stream and surrounding the entrance and throat regions of the nozzle wall with the effective passage height conforming substantially to the nozzle diameter along the length thereof to equalize the flow of the low energy gas stream therethrough to the flow of the high energy gas stream through the nozzle; means for inter-

connecting the nozzle and said passage in predetermined spaced relation, and a series of gas delivery hose members communicating with and adapted to deliver low energy gas into the forward end of said passage adjacent the entrance end of the nozzle at a pressure corresponding to the pressure of the high energy gas stream entering the nozzle.

4. In a cooling apparatus for a thin walled supersonic flow nozzle and the like comprising: inclosed means surrounding the nozzle wall so constructed and arranged as to define a contoured passageway between the nozzle and said outer wall, said passageway having an effective area along the length thereof conforming substantially to the nozzle area to effect a corresponding equivalent Mach number and stagnant pressure at various predetermined points therebetween along the passageway, means for connecting said inclosing means and the nozzle wall in predetermined, spaced relation, and means to direct a coolant gas through said passageway at a velocity and pressure corresponding to the velocity and pressure of the stream flowing through the supersonic flow nozzle.

5. In a high speed, thin-walled, axially symmetrical flow nozzle disposed within a wind tunnel housing adapted to contain a forced air supply and a heater and having a main flow passage including a convergent entrance adjacent to the wind tunnel entrance adapted to receive air under high pressure from the heater, a restricted throat section to accelerate the air received to supersonic speeds

and a gradually divergent test section to further accelerate the air to hypersonic speeds, means for cooling the exterior walls of the nozzle, said means comprising an annular outer wall surrounding the nozzle wall in spaced relation thereto to form an annular passage between the exterior surface of the nozzle wall and the interior surface of said outer wall and contoured in substantial conformance with the contour of said main flow passage at predetermined intervals therealong to effect equivalent Mach numbers therebetween on admission of coolant gas through said contoured passage at a rate corresponding to the rate of flow of compressible fluid into said main flow passage, and liquid conducting means in communication with said contoured passage to introduce liquid thereinto for intermixing with said coolant gas to absorb heat from the exterior walls of the nozzle and maintain a constant temperature.

References Cited in the file of this patent

UNITED STATES PATENTS

2,354,151	Skoglund	July 18, 1944
2,439,473	Kalitinsky	Apr. 13, 1948
2,520,751	Zucrow	Aug. 29, 1950
2,671,313	Laramee	Mar. 9, 1954

FOREIGN PATENTS

22,028	Great Britain	Nov. 1, 1901