May 14, 1963 F. ASNES 3,089,443

BUTTON FEEDING APPARATUS

Filed May 27, 1960 4 Sheets-Sheet 1

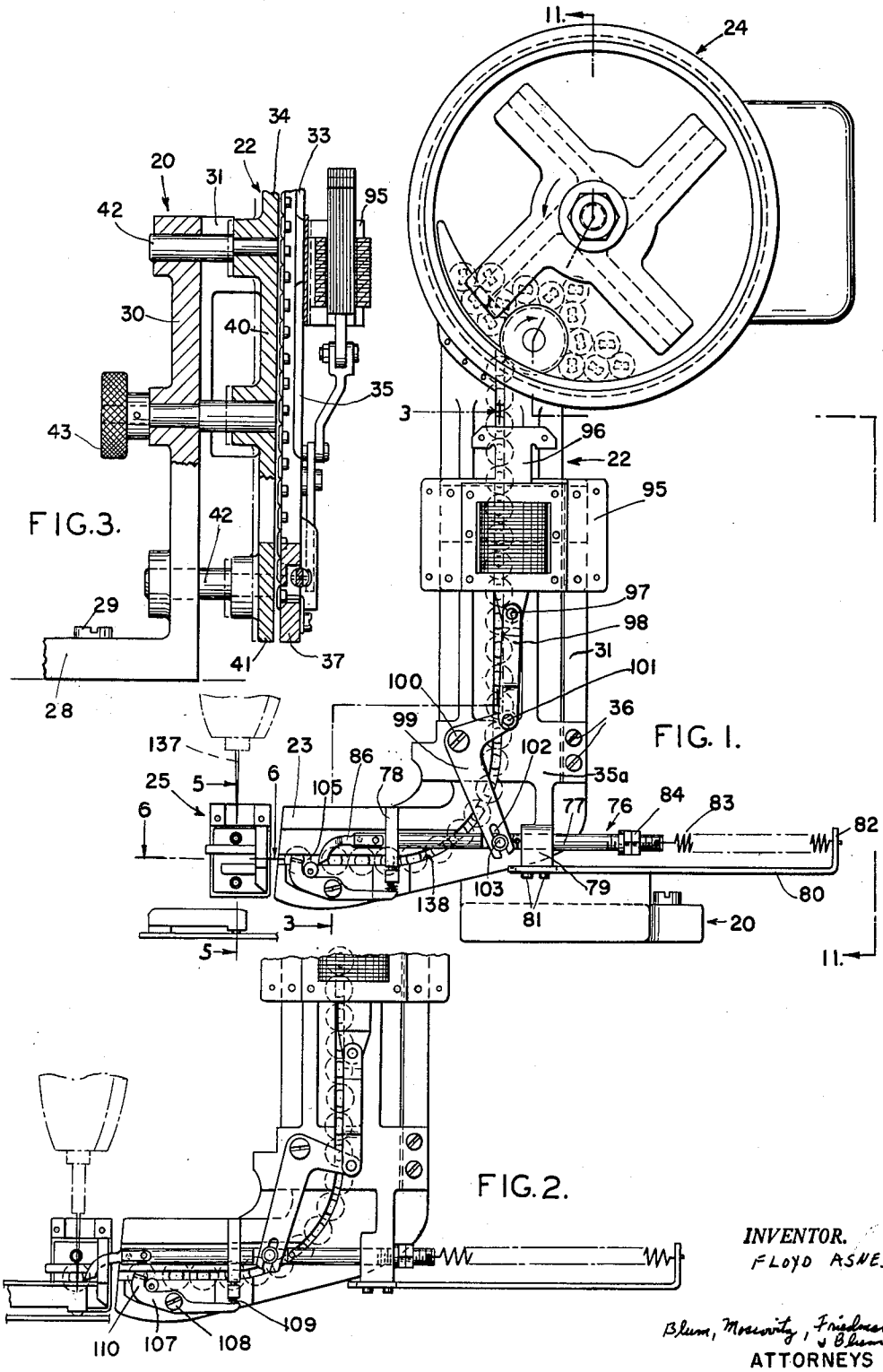

FIG. 3.

FIG. 1.

FIG. 2.

INVENTOR.
FLOYD ASNES

Blum, Moscovitz, Friedman & Blum
ATTORNEYS

May 14, 1963 F. ASNES 3,089,443

BUTTON FEEDING APPARATUS

Filed May 27, 1960 4 Sheets-Sheet 2

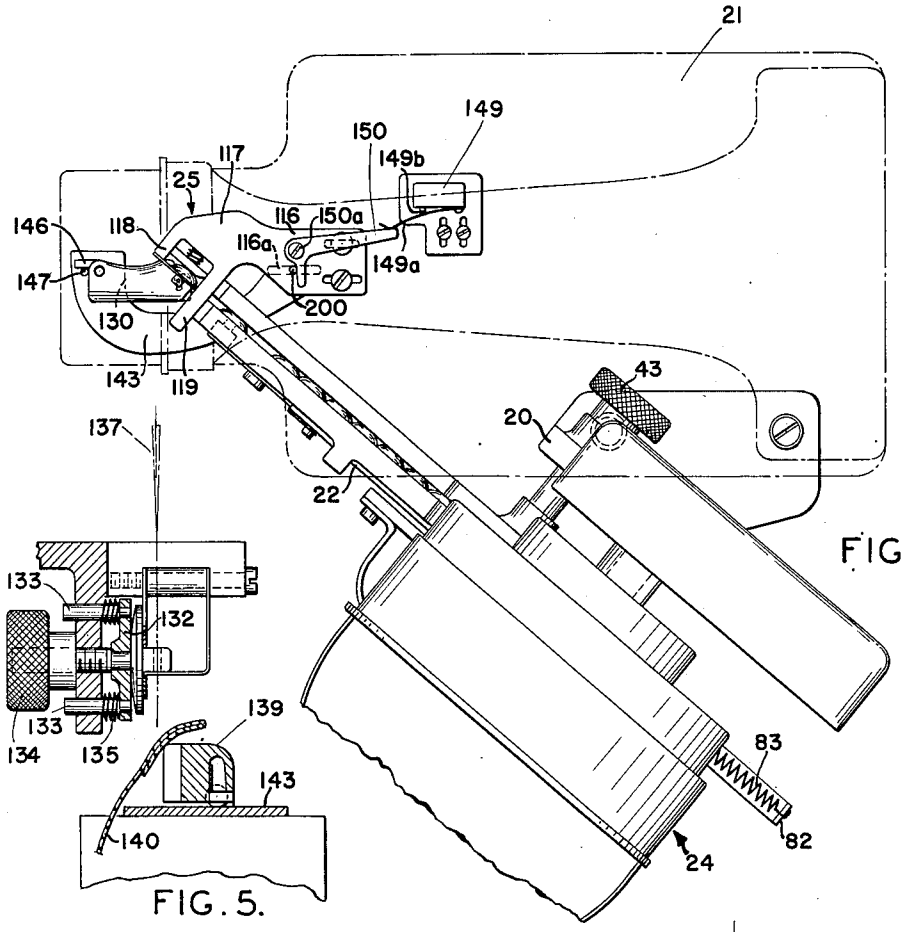

FIG. 4.

FIG. 5.

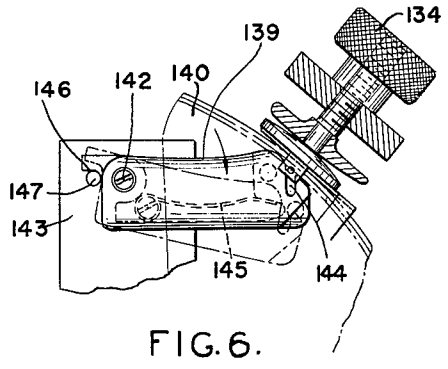

FIG. 6.

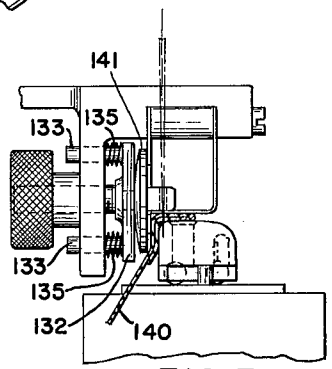

FIG. 7.

INVENTOR.
FLOYD ASNES

BY Blum, Moscovitz, Friedman & Blum

ATTORNEYS

May 14, 1963 F. ASNES 3,089,443

BUTTON FEEDING APPARATUS

Filed May 27, 1960 4 Sheets-Sheet 3

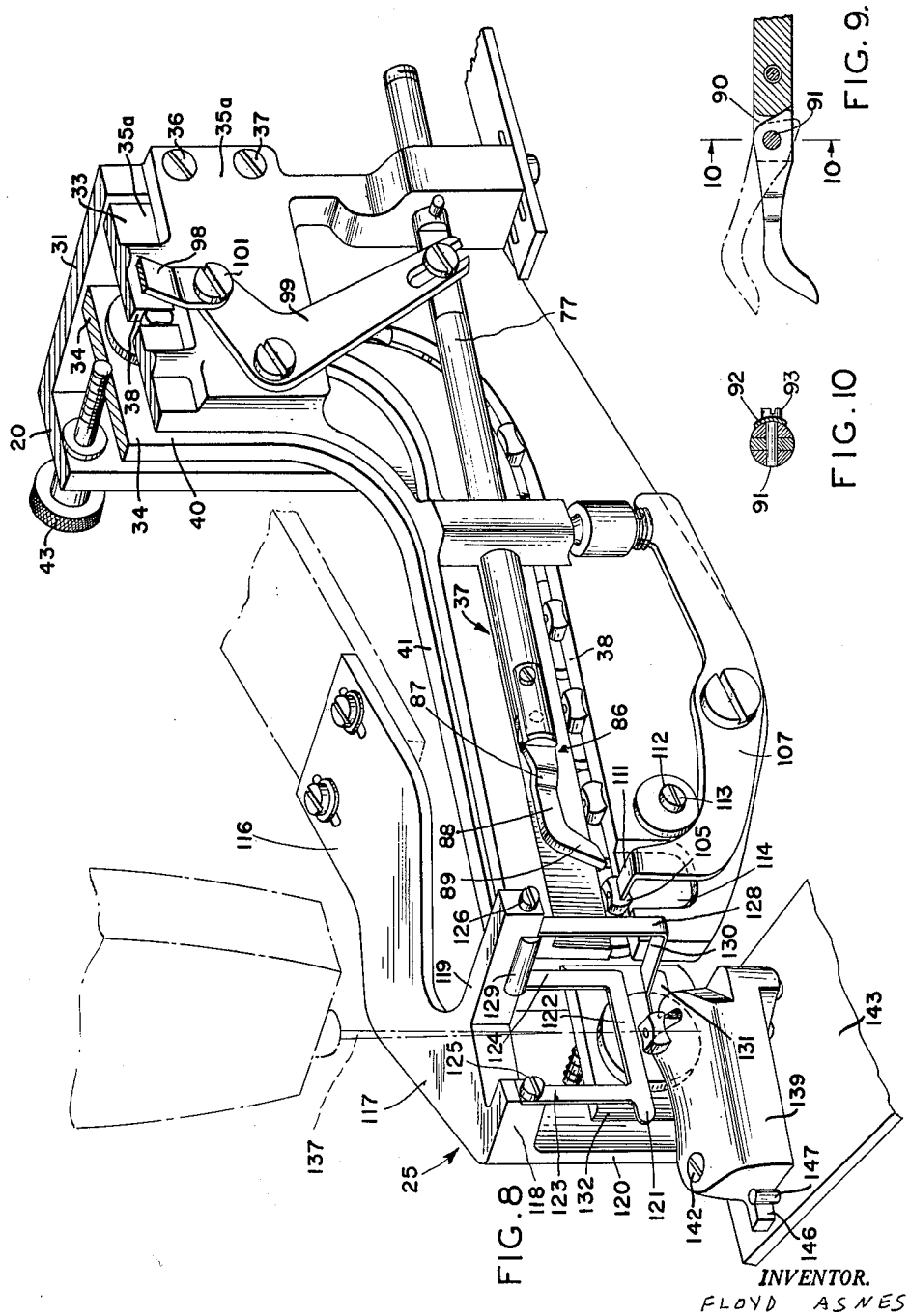

FIG. 8

FIG. 9

FIG. 10

INVENTOR.
FLOYD ASNES

BY Blum, Moscovitz, Friedman & Blum

ATTORNEYS

May 14, 1963 F. ASNES 3,089,443

BUTTON FEEDING APPARATUS

Filed May 27, 1960 4 Sheets-Sheet 4

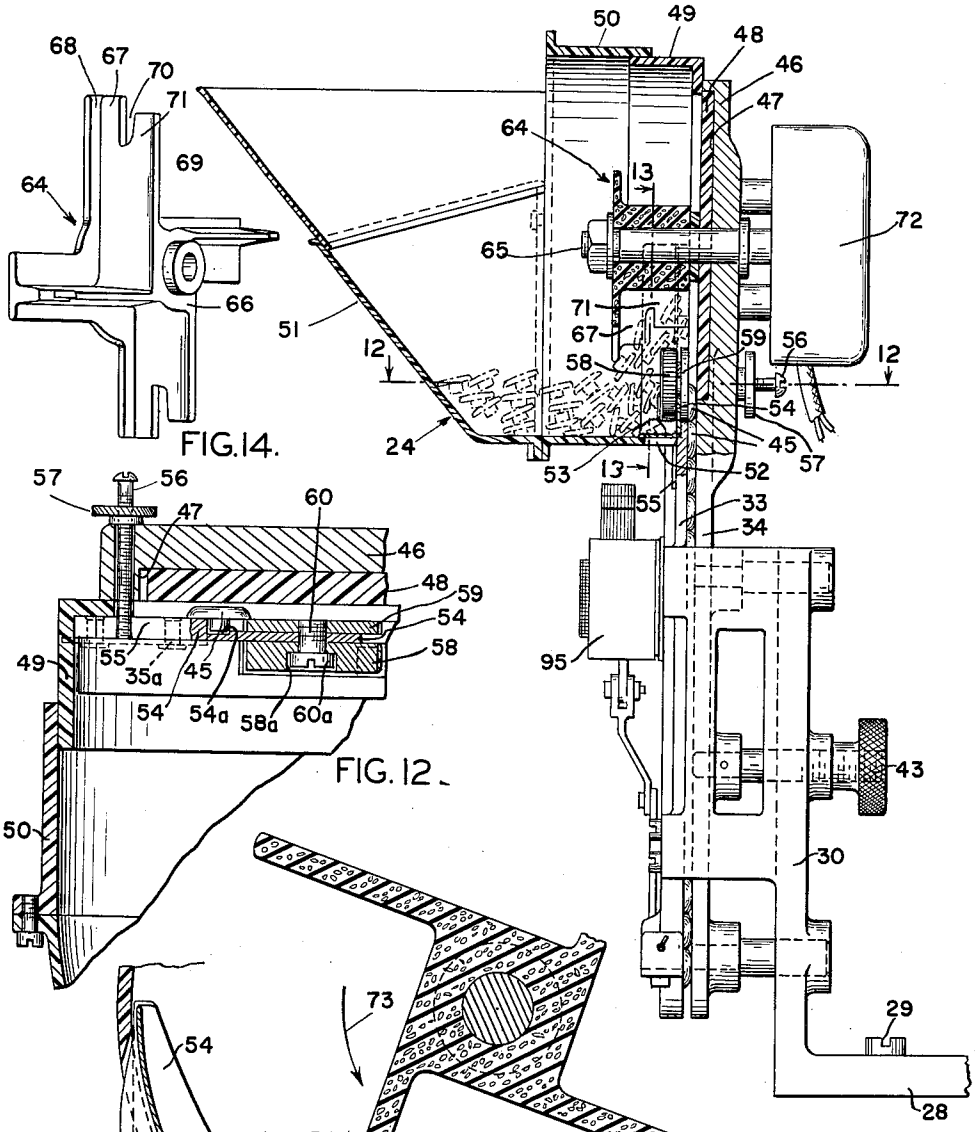

FIG. 11.

FIG. 12.

FIG. 14.

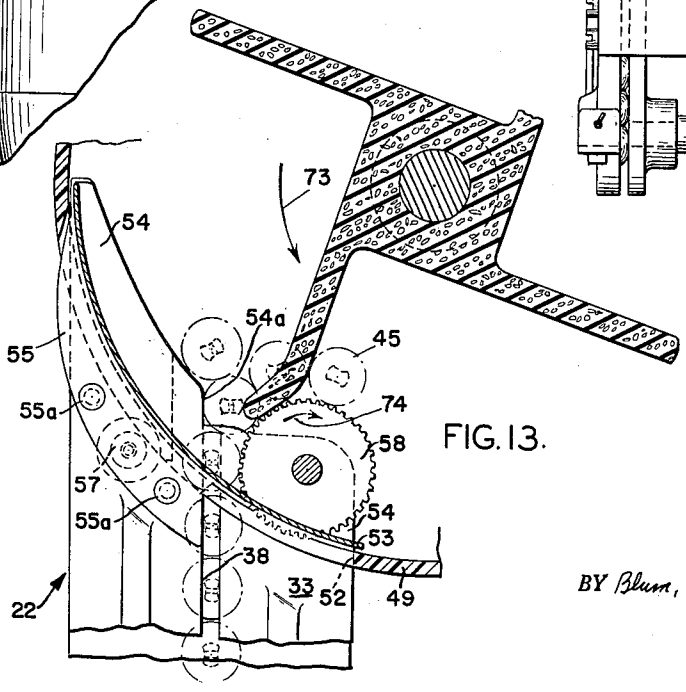

FIG. 13.

INVENTOR.
FLOYD ASNES

BY Blum, Moscovitz, Friedman & Blum

ATTORNEYS

United States Patent Office 3,089,443 Patented May 14, 1963

3,089,443

BUTTON FEEDING APPARATUS

Floyd Asnes, Glen Oaks, N.Y., assignor to Namm & Singer, Inc., New York, N.Y., a corporation of New York

Filed May 27, 1960, Ser. No. 32,260
7 Claims. (Cl. 112—110)

This invention relates generally to feeding apparatus, and is especially concerned with such apparatus as is adapted for feeding buttons, say for use with a sewing machine.

As is well known to those versed in the art, there have in the past been proposed various devices for feeding buttons from a hopper into position to be sewn to a garment. However, prior devices have not been entirely satisfactory for several reasons, including lack of adjustability to accommodate different-size buttons, and undue complexity in construction, resulting in relatively high cost and unreliability in operation.

Accordingly, it is an object of the present invention to provide button-feeding apparatus for use with a sewing machine which overcomes the above-mentioned difficulties, permitting adjustment through a wide range for accommodating buttons of great variety in size and shape.

It is another object of the present invention to provide a button-feeding apparatus adapted to be attached to a sewing machine for employment in conjunction therewith, which is entirely automatic and highly efficient in operation, and which is durable and reliable throughout a long useful life.

It is a more particular object of the present invention to provide a button-feeding attachment for a sewing machine, which attachment includes a chute, a hopper for supplying buttons to the chute, and a button receiver for holding buttons discharged from the chute in position to be sewn, all of which elements are conveniently and easily adjustable to accommodate different sizes and shapes of buttons.

The instant invention also contemplates the provision of novel means for actuating the button-feeding operation automatically in response to the button-sewing procedure.

Other objects of the present invention will become apparent upon reading the following specification and referring to the accompanying drawings, which form a material part of this disclosure.

The invention accordingly consists in the features of construction, combinations of elements, and arrangements of parts, which will be exemplified in the construction hereinafter described, and of which the scope will be indicated by the appended claims.

In the drawings:

FIGURE 1 is a side elevational view showing the button-feeding apparatus of the instant invention preparatory to the button-feeding operation;

FIGURE 2 is a partial side elevational view showing the button-feeding apparatus of FIGURE 1, but illustrating the apparatus subsequent to the button-feeding operation;

FIGURE 3 is a partial sectional elevational view taken substantially along the line 3—3 of FIGURE 1;

FIGURE 4 is a top plan view showing the button-feeding apparatus of FIGURE 1 in association with a sewing machine, the latter being shown in dot-and-dash outline;

FIGURE 5 is a sectional elevational view taken substantially along the line 5—5 of FIGURE 1;

FIGURE 6 is a sectional plan view taken substantially along the line 6—6 of FIGURE 1;

FIGURE 7 is a front end view showing the structure of FIGURE 5, but illustrating the same during attachment of a button to a garment;

FIGURE 8 is a partial front perspective view showing the instant button-feeding apparatus;

FIGURE 9 is a partial longitudinal sectional view showing a button-engaging element of the button-advancing mechanism, and illustrating in dot-and-dash outline an alternate position thereof;

FIGURE 10 is a transverse sectional view taken substantially along the line 10—10 of FIGURE 9;

FIGURE 11 is a sectional elevational view taken substantially along the line 11—11 of FIGURE 1;

FIGURE 12 is a generally horizontal sectional view taken substantially along the line 12—12 of FIGURE 11;

FIGURE 13 is a partial sectional elevational view taken substantially along the line 13—13 of FIGURE 11; and

FIGURE 14 is a perspective view showing an agitator wheel of the instant apparatus apart therefrom.

Referring now more particularly to the drawings, and specifically to FIGURES 1–4 thereof, the apparatus includes an upstanding mount or mounting standard 20 which is fixed to the base 21 of a sewing machine. The mount 20 carries a generally upstanding chute, broadly designated 22, which has its lower end region 23 extending generally horizontally forward. At the upper end of the chute 22 is located a button container or supply hopper 24 for introducing buttons into the upper end of the chute. Adjacent to the lower end of the chute is provided a button receiver, generally designated 25, for receiving a button discharged from the lower end of the chute and holding the button in position during its attachment to a garment.

The mount or mounting member 20 may be a bracket having a foot 28 secured by bolts 29 to the sewing-machine base 21, and having an upstanding arm 30. Along its rearward edge, the upstanding arm 30 is provided with a laterally extending flange 31.

The chute 22 includes a pair of facing, complemental chute elements 33 and 34. The chute element 33 is formed with an upstanding portion 35 having an outer boss 35*a* secured fast to the flange 31 of the mount 20, as by fasteners 36, and the chute element 33 also includes a lower end portion 37 extending generally horizontally forward. A slot or groove 38 is formed in the chute element 33, extending throughout the length thereof, opening upwardly through the upper end of the upstanding chute portion 35, and forwardly through the lower end of the horizontal lower chute portion 37.

The complemental chute element 34 is arranged between the fixed chute element 33 and the mount 20, and is carried by the latter for selective adjustment toward and away from the fixed chute element. More particularly, the adjustable chute element 34 includes an upstanding portion 40 and a lower end portion 41 extending generally horizontally forwardly from the lower end of the upstanding portion, with the upstanding portion 40 and lower end portion 41 in respective facing relation with the upstanding portion 35 and lower portion 37 of the fixed chute element 33. The adjustable chute element 34 is carried by pins 42 extending away from the fixed chute element 33 slidably into the mounting-member arm 30, to mount the chute element 34 for movement toward and away from the chute element 33 in facing relation with the latter. Further, suitable manually actuable lead-screw means 43 is connected between the mounting arm 30 and the chute element 34 for effecting movement of the latter to adjust the same in a selected spaced relation with respect to the fixed chute element 33. The chute element 34 may have its surface facing toward the chute element 33 substantially flat for engagement with the heads of buttons 45, see FIGURE 8.

A generally vertical upper end enlargement 46 is provided on the movable chute element 34, substantially

coplanar therewith for carrying the hopper **24**. The hopper **24** is carried by the upper end enlargement **46** of the chute element **34** on the same side thereof as the fixed chute element **33**; and, the hopper extends horizontally beyond and receives the upper end of the fixed chute element. More specifically, the upper end enlargement **46** is recessed at **47** on its side adjacent to the fixed chute element **33** and receives therein a generally circular, vertically disposed side or end wall **48** of the hopper. The inner surface of the hopper wall **48** is substantially flush with the inner facing surface of the chute element **34**. The hopper also includes a cylindrical wall constituted of an inner section **49** extending from the facing side of the adjustable chute element **34** beyond the fixed chute element **33** and having an inturned end flange **49***a* fixed to enlargement **46**, and an additional cylindrical wall section **50** extending from the section **49**. The open distal end of the cylindrical wall section **50** is provided with an upwardly and outwardly inclined wall **51** adapted to receive and retain a quantity of buttons deposited in the hopper.

The underside of the cylindrical hopper wall section **49** is cut away or open, as at **52**, and there receives the upper end portion of the fixed chute element **33**; and, an arcuately curved bottom plate **53** seats interiorly within the lower region of the cylindrical wall section **49** overlying and closing the opening **52**. The bottom plate **53** is provided with a flange **54** upstanding internally of the hopper and engaging against the outer, non-facing side of the fixed chute element **33**, as shown in FIG. 11. A depending external flange **55** is provided on the bottom plate **53** which is secured in facing engagement with the non-facing side of the fixed chute element **33** by bolts **55***a* (FIG. 13). Bolt **56** is threaded into the flange **55**, extending spacedly through the upper end enlargement **46** of the movable chute element **34**, and a knurled nut **57** is releasably secured in facing engagement with the outer surface of the enlargement **46**. A pair of freely rotatable toothed orienting wheels **58** and **59** are carried interiorly of the hopper **24**, being journaled therein on opposite sides of the flange **54** by screw pin **60**. The shank of screw pin **60** is threaded through a threaded opening of flange **54**. The head **60***a* of pin **60** is received within an appropriate recess **58***a* of wheel **58**, as shown in FIG. 12. Wheel **58** is turnable on the shank of pin **60** on one side of flange **54**. Wheel **59** is turnable on the shank of pin **60** on the other side of flange **54**. Pin **60** extends in general parallelism with and offset with respect to the cylindrical axis of the hopper **24** and is provided with the freely rotatable toothed wheels **58** and **59** located generally tangent to the path of a button entering into the upper end of the chute **22**. Further, it may be observed in FIGURES 11 and 12 that the toothed wheel **59** has one face substantially flush with the facing side of the fixed chute element **33**.

Flange **54** has a slot **54***a* which is vertically aligned with slot **38**. Flange **55** is located to one side of slot **38**, as shown in FIG. 13.

An agitating star wheel or spider **64** is mounted concentrically within the cylindrical sections **49** and **50** of the hopper **24** on a rotatable shaft **65** which is journaled in and overhangs from the upper end enlargement **46** of the movable chute element **34**. The agitating wheel **64** is best seen in FIGURE 14 and includes a hub **66** from which extend, generally radially, a plurality of spokes **67**. The spider wheel **64** is preferably integrally fabricated, as by molding, of resiliently deflectable material, such as rubber, plastic, or the like. Each spoke **67** may be formed with a generally flat, radially extending portion **68** disposed in a plane normal to the axis of hub **66**; and in addition, a generally flat portion **69** extends longitudinally along and generally normal to each of the portions **68**, so as to lie in a plane generally parallel to the axis of hub **66**. Each generally flat portion **69** is radially coextensive with its adjacent, integrally formed portion **68** and is provided with a cut or slot **70** extending generally radially inward from its outer end and defining a finger **71** on its edge spaced from the adjacent portion **68**. The finger **71** of each spoke **67** may terminate radially short of the portion **68** and remainder of portion **69**, and by its dimensions is readily resiliently deflectable.

The shaft **65** is rotated by suitable motor means **72** carried by the upper end enlargement **46** on the outer side thereof, see FIGURE 11. Upon rotation of the shaft **65**, to rotate the agitator wheel **64** in the direction of arrow **73** in FIGURE 13, the spokes **67** effect continuously repeated agitation of buttons contained in the hopper **24**, and the spoke fingers **71** deflectably engage with the toothed peripheries of wheels **58** and **59** to rotate the latter in the direction of arrow **74**. Rotation of the wheels **58** and **59** serves to jog and orient the buttons for entry into the chute **22**. Specifically, a properly oriented button will be located with its head extending between flange **54** and wall **48**, as shown in FIGS. 11–13, and with its properly oriented shank extending into slot **54***a*. As shown in FIG. 12, slot **54***a* need not extend entirely through flange **54**, as long as it is deep enough to accommodate the button shank. As shown in FIG. 12, the button received against flange **54** with its shank in slot **54***a* ultimately drops down into chute **22**, with its shank in slot **38** and with its head between the chute elements **33** and **34**.

Upon adjustment of the chute to accommodate buttons of different-size heads, as by movement of the chute element **34**, it is apparent that the hopper components **48**, **49**, **50**, and **51**, as well as the agitating wheel **64** move with the chute element **34** relative to the fixed chute element **33**. In order to insure that the hopper opening **52**, which spacedly receives the upper end region of the fixed chute element **32**, remains closed exteriorly of the chute, the bottom plate **53** may remain fixed relative to the fixed chute element **33**, thereby moving relative to the remainder of the hopper structure. This may be accomplished by adjustment of the nut **57** to maintain the latter against the outer side of the enlargement **46**.

An advancing mechanism, generally designated **76** and best seen in FIGURES 1 and 2, is associated with the chute **22** for advancing buttons therein and individually discharging the buttons, as required. The advancing mechanism **76** includes a generally horizontally disposed rod **77** located adjacent to the lower chute end region **23**, extending along the fixed chute element **33**, and carried thereby for forward-and-rearward, longitudinal reciprocation. That is, the fixed chute element **33** on its outer or nonfacing side is provided with a pair of forward and rearward, alined bearing members **78** and **79**, which combine to support the shaft **77** in its reciprocating motion. A rearward extension **80** is adjustably fixed to the underside of the bearing support **79**, as by fasteners **81**, and extends rearward therefrom, having its rearward portion extending upward, as at **82**, in alinement with the shaft **77**. A coil tension spring **83** is connected between the rear end of the shaft **77** and the upstanding portion **82** to resiliently urge the rod rearward; and, stop nuts **84** are threaded on, and thereby adjustable longitudinally of the rearward end region of the rod **77**, rearward of the rear bearing support **79**, for abutting engagement with the latter to limit forward motion of the rod.

It may be observed in FIGURES 1–3 and 8 that the advancing rod **77** is located outward of and along the lower horizontal end region of the fixed chute element **33**, adjacent to and spaced above the slot or groove **38** which receives the button shanks. On the forward end of the advancing rod **77** there is provided an engaging member **86**, best seen in FIGURES 8–10. The engaging member **86** extends forward from the forward end of the rod **77**, being offset laterally inward at **87** toward the chute element **33**, and thence extending forward, as at **88**, over the button shanks received in slot **38**, and having its forward end depending downward, as at **89**,

into the path of movement of the button shanks. The forward end of the advancing rod **77** is bifurcated, as by a generally vertical forwardly opening slot **90**, and receives therein the rearward end of the engaging member **86**. A pivot pin extends transversely through the forward end region of the advancing rod **77**, and through the received rearward region of the engaging member **86** to mount the latter for swinging movement between its solid and dashed outline positions shown in FIGURE 9. The engaging member **86** falls gravitationally to its solid-line position, being limited thereto by abutting engagement of its rearward region with the internal surface of the notch or slot **90**. The pivot pin **91** is releasably held in the illustrated position by a cover piece **92** detachably secured to the advancing rod **77** by a fastener **93** so as to overlie one end of the pivot pin.

Fixed to the upstanding region **35** of the chute element **33**, outward thereof, is a generally vertically disposed solenoid **95** having a generally vertical electrically actuable plunger **96**. Extending downward from the lower end of the plunger **96**, and pivotally connected thereto by a pivot **97**, is a link **98**. An angulate lever or bell crank **99** is pivoted medially to the fixed chute element **33** by a pivot **100**, and has one end pivotally connected, as by a pivot **101** to the lower end of the link **98**. The other end of the bell crank **99** is provided with a slot **102** slidably receiving a pin **103** carried by the advancing rod **77**, extending laterally outward therefrom.

Upon actuation of the solenoid **95** to move its plunger **96** downward from the position of FIGURE 1, the bell crank **99** is rotated clockwise, by the line **98** to the position of FIGURE 2, wherein the advancing rod **77** has been extended or shifted forward from the retracted position of FIGURE 1. In the retracted position of FIGURE 1, the engaging member **86** is retracted to a location just rearward of the lowermost button **105**, while in the extended or forward position of FIGURE 2, the engaging member **86** is located forward or outward beyond the lower, discharge end of the chute. In its forward movement, the engaging member **86** engages with the shank of button **105** to discharge or shift the latter button forward out of the chute and permit the next adjacent button to gravitationally assume the previous lowermost position of the discharged button. Upon its retracting movement from the position of FIGURE 2 to FIGURE 1, the engaging member **86** swings upward about its pivot **91** to ride over the lowermost button shank.

The lowermost button is held in position by a holding or retaining member or arm **107** extending along and outward of the fixed lower chute region **37**, spaced below the slot **38**. Intermediate its ends, the retaining member or arm **107** is pivoted, as by a pivot **108** to the fixed chute element **33**. From the pivot **108**, the retaining member or arm **107** extends rearward where it is resiliently engaged by spring means **109** urging the arm in the clockwise direction. Forwardly of the medial pivot **108**, the retaining member or arm **107** extends upward, as at **110**, and at its upper end is bent to extend laterally inward toward the slot **38**, the laterally extending portion being designated **111** and best seen in FIGURE 8. The inner end of the lateral arm region **111** engages with the lowermost button **105** to frictionally retain the latter in its lowermost position. The limiting position of clockwise rotation of the retaining arm **107** is determined by the position of rotation of an eccentric stop member **112**. That is, the eccentric stop member **112** is rotatably adjustable at the fastener **113** and in position to engage with the forward region of arm **107** to limit its clockwise rotation to the desired position for frictional engagement with the lowermost button. The outer side of the lower chute element region **37**, beneath the lateral arm region **111** is provided with a recess or pocket for receiving the latter region and permitting counterclockwise rotation of the retaining arm against the force of spring means **109**.

The button receiver **25** includes a mounting bracket or arm **116** which may be integrally formed on its forward end with an open support member **117** having a pair of forward and rearward legs **118** and **119**, extending laterally in front of the discharge end of the chute **22**, and spaced above the slot **38**. The support member **117** also includes a depending wall **120** on one side of the discharge end of the chute.

Depending from the legs **118** and **119** is a generally U-shaped resilient member **121** having a forwardly and rearwardly extending lower portion **122**, and a pair of forwardly and rearwardly spaced legs **123** and **124** upstanding from the lower portion. The upper ends of the legs **123** and **124** are respectively secured to the legs **118** and **119**. The member **121** may be formed of resilient sheet material and carried by the legs **118** and **119** for adjustment laterally of the chute **22**, as by manipulation of the fasteners **125** and **126**. An additional resilient strip **128** is carried by the support member leg **119**, being spaced outward from the resilient leg **124** by a spacer **129**. The strip **128** depends from the support member leg **119** and is bent to extend toward the plane of the U-shaped resilient member **121**, as at **130**. Coplanar with the resilient member **121**, the strip **128** is provided with a portion **131** extending parallel to and below the portion **122**, and combining with the latter to define therebetween a slot for receiving the shank of a discharged button. Portions **122** and **131** with their supports serve as resilient clamping means for the button head.

A backing member or plate **132** is arranged generally vertically between the wall **120** and the resilient elements **121** and **131**, and is mounted on the wall by pins **133** extending slidably through the wall for movement toward and away from the latter. Manually actuable screw means **134**, see FIGURES 5 and 7 are provided on the wall **120** and connected to the backing plate **132** for effecting movement of the latter toward and away from the resilient element **121**, the pins **133** being provided with coil springs **135** to take up any slack in the threads of screw means **134**. It will now be appreciated that the receiver **25** is provided with structure adapted to receive and retain a button discharged from the chute **22**, with the button shank being received between the resilient members **122** and **131**, and the button head being frictionally retained between the backing member **132**, and the resilient members **122** and **131**, as best seen in FIGURE 8.

The receiving structure **25** is located in position to receive the vertically reciprocating sewing-machine needle **137** between the legs **118** and **119**, with a button positioned to properly receive the reciprocating needle.

Below the button receiver **25** is mounted an anvil **139** for supporting a fabric or garment **140** in position to have a button **141** in the receiver sewn to the fabric or garment. The anvil **139** is generally elongate, and pivotally mounted at one end, as by a pivot **142** on a support or base **143**. At the other end of the anvil is provided a vertically opening through slot **144** for receiving a reciprocating sewing needle. A leaf spring **145**, or other suitable resilient means, is provided for urging the anvil **139** in one direction about its pivot **142** toward its operative position with the slot **144** located to receive the sewing needle. An extension **146** may be provided on the anvil **139** engageable with an upstanding pin or abutment **147** on the base **143** to limit rotation of the anvil into its operative position and permit rotation of the anvil out of its operative position against the force of the resilient means **145**. Also, suitable means are provided for moving the support **143** of anvil **139** vertically toward and away from the receiver **25**.

For example, base or support **143** may be moved between its raised position of FIG. 8 and other views and its lowered position of FIG. 5 by any suitable means,

such as a conventional foot treadle. The same foot treadle (not shown) may also start the operation of the sewing machine, as is conventional. As shown in FIG. 4, the support **143** is curved and inclined to extend under mounting bracket or arm **116**. This has an elongated slot **116***a*. Pin **200** upstanding from the end of support **143** extends slidably into and through slot **116***a* and above the upper face of element **116**. L-shaped lever **150** is pivoted at the junction of its arms, at **150***a*, to the upper face of support **116**, with one arm of lever **150** abutting pin **200**. The other arm of lever **150** abuts the switch arm **149***a* of microswitch **149**. It will be apparent that in raising support **143**, it may also be rocked so as to slide pin **200** within slot **116***a* to engage lever **150** so as to rock it in counterclockwise position, as taken in FIG. 4. This may move the switch arm **149***a* against its support **149**, and this maintains switch **149** in normally open position. When the support **143** is lowered, as by release of the foot treadle at the conclusion of the sewing operation, this may move pin **200** in slot **116***a* away from lever **150** in such a way as to permit the spring **149***b* of switch **149** to move the switch lever **149***a* to switch closing position. Switch **149** may be conventionally in the electric circuit of solenoid **195**, so that upon closing of switch **149**, solenoid **95** is energized.

In operation, it is only necessary to introduce buttons into the hopper **24**, and energize the motor **72** for effecting a constant filling of the chute **22** with properly oriented buttons. The buttons move gravitationally downward in the chute, the lowermost button **105** being retained in position by the retaining member **107** prior to discharge, and the next lowermost button being retained in position by the engaging member **86** in its retracted condition. Upon energization of the solenoid **95**, as by relative movement between the button receiver **25** and anvil base **143** to actuate the switch **149**, the advancing rod **77** shifts forward to forcibly discharge the lowermost button **105** and moves the latter into position received in the button receiver as mentioned hereinbefore. The next lowermost button, and the remaining buttons in the chute move gravitationally downward, with the then lowermost button retained in proper position by the retaining member **107**, and the advancing arm **77** is retracted to the position of FIGURE 1, with the engaging member riding over the lowermost button.

With a garment **140** in position on the anvil **139** against the shank of a button **141**, as seen in FIGURE 7, the sewing needle effectively secures the button to the garment.

From the foregoing, it is seen that the present invention provides a button-feeding apparatus which fully accomplishes its intended objects and is well adapted to meet practical conditions of manufacture, installation, operation and maintenance.

Although the present invention has been described in some detail by way of illustration and example for purposes of clarity of understanding, it is understood that certain changes and modifications may be made within the spirit of the invention and scope of the appended claims.

What is claimed is:

1. Button-feeding apparatus comprising a mount having an upstanding arm, an elongated, rigid chute element, means mounting said chute element on said upstanding arm in spaced opposition thereto, a further chute element complementary to said fixed chute element and disposed between said upstanding arm and said fixed chute element, said chute elements having opposing sides, at least two spaced pins on said further chute element extending toward said upstanding arm, said upstanding arm having bearings respectively slidably receiving said pins and mounting said further chute element on said upstanding arm so that said sides of said chute elements are always parallel to each other and so that said further chute element is movable to vary the spacing between said sides, said sides being shaped to define therebetween a chute for the heads of buttons extending to the tops of said chute elements, said fixed chute element having a slot for reception of the shanks of said buttons, said further chute element being movable so as to accommodate button heads of different thicknesses in said chute, and single adjustment means between said pins coupling said further chute element and said upstanding arm and operable to vary the position of said further chute element.

2. Button-feeding apparatus comprising a generally vertically extending chute having an open upper end and shaped and sized to receive buttons having heads and shanks in vertical succession with the heads in alignment, a hopper carried at the upper end of said chute and opening into the upper end thereof, a toothed wheel freely rotatable in said hopper proximate to the upper end of said chute for orienting said buttons to enter said chute, and a star wheel rotatable centrally in said hopper and having resiliently deflectable arms for agitating the buttons and engageable with the periphery of said toothed wheel for rotating the latter, said toothed wheel being positioned just below the upper end of said chute and positioned relative to the upper end of the chute so as to jog any button approaching said upper end so as to prevent its entrance into the chute unless said approaching button is properly oriented.

3. Button-feeding apparatus comprising a mount, a pair of facing complemental chute elements carried by said mount and defining therebetween a chute for buttons having heads and shanks and adapted to receive said buttons successively with the heads in alignment and with the faces of said heads opposing said chute elements, said chute having an outlet end, means mounting one of said chute elements for adjustment toward and away from the other chute element to adjust said chute for buttons of different head thicknesses, and a button receiver positioned to receive buttons from said chute outlet end, said receiver comprising a support member carried by said mount and adapted to pass a sewing needle, a plate, means adjustably mounting said plate on said support so as to be movable in the same direction as said one chute element and so as to be adapted to be maintained in substantial alignment therewith, a resilient clamping member and means mounting said clamping member on said support so as to oppose and be movable toward and away from said plate and so as to be substantially aligned with said other chute element, said plate and said clamping member being positioned and adapted to receive and retain therebetween the head of a button discharged from said chute with the shank thereof in position to be sewn.

4. Button-feeding apparatus in accordance with claim 3, said clamping member including a through slot positioned and adapted to receive therebetween the shank of said discharged button.

5. Button-feeding apparatus comprising a mount, a pair of facing complemental chute elements carried by said mount and defining therebetween a chute for buttons having heads and shanks and adapted to receive said buttons successively with the heads in alignment and with the faces of said heads opposing said chute elements, said chute having an outlet end, means mounting one of said chute elements for adjustment toward and away from the other chute element to adjust said chute for buttons of different head thicknesses, and a button receiver positioned to receive buttons from said chute outlet end, said receiver comprising a support member carried by said mount and adapted to pass a sewing needle, a plate, means adjustably mounting said plate on said support so as to be movable in the same direction as said one chute element and so as to be adapted to be maintained in substantial alignment therewith, a clamping member, said clamping member including a U-shaped spring plate the parallel members of which are mounted upon said support and the connecting arm of which thereby opposes and is resiliently movable toward and away from said rigid plate and so as to be substantially aligned with said other chute element,

said plate and said connecting arm being positioned and adapted to receive and retain therebetween the head of a button discharged from said chute with the shank thereof in position to be sewn and located adjacent the edge of said connecting arm which is remote from said parallel arm, said clamping member also comprising a spring arm and means resiliently mounting said spring arm on said support with said spring arm coplanar with and spaced from and parallel to said connecting arm and positioned relative thereto to receive said discharged shank therebetween.

6. Button-feeding apparatus according to claim 3, said apparatus also comprising an anvil, means mounting said anvil below said button receiver, said anvil being elongated in the direction of feeding movement of the button and having a pivot at its end remote from the chute and a head at its other end positioned to receive fabric clamped thereagainst and under said shank, said head having a needle slot, said anvil being turnable about its pivot so as to swing said head toward and away from said plate, and spring means urging said head toward said plate.

7. Button-feeding apparatus according to claim 5, said apparatus also comprising an anvil, means mounting said anvil below said button receiver, said anvil being elongated in the direction of feeding movement of the button and having a pivot at its end remote from the chute and a head at its other end positioned to receive fabric clamped thereagainst and under said shank, said head having a needle slot, said anvil being turnable about its pivot so as to swing said head toward and away from said plate, and spring means urging said head toward said plate, said anvil being adapted to be aligned with said clamping means so as to receive the head of the button between said plate and said anvil beyond said clamping finger and so as to receive said shank between said connecting arms and said anvil beyond said spring arm.

References Cited in the file of this patent

UNITED STATES PATENTS

194,005	Sherwood	Aug. 7, 1877
1,020,949	Horton	Mar. 19, 1912
1,063,885	Kiewicz	June 3, 1913
1,079,967	White	Dec. 2, 1913
1,160,487	Barker	Nov. 16, 1915
1,181,228	Kiewicz	May 2, 1916
1,255,529	Hagelstein	Feb. 5, 1918
1,434,704	Jacques	Nov. 7, 1922
1,473,604	Bates	Nov. 13, 1923
1,931,830	Rich	Oct. 24, 1933
2,487,352	McDaniel	Nov. 8, 1949
2,571,450	Hughes	Oct. 16, 1951
2,843,069	Halbreich	July 15, 1958