May 10, 1949. H. A. ROHDIN 2,469,521

COLORING PACKAGE FOR OLEOMARGARINE

Filed June 5, 1947

Fig. 1

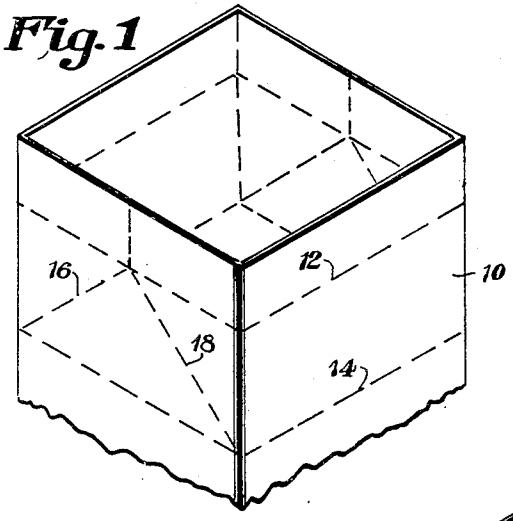

Fig. 4

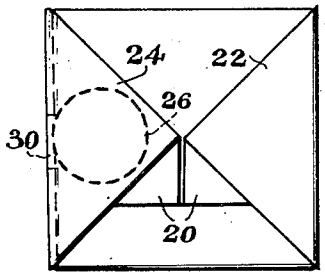

Fig. 2

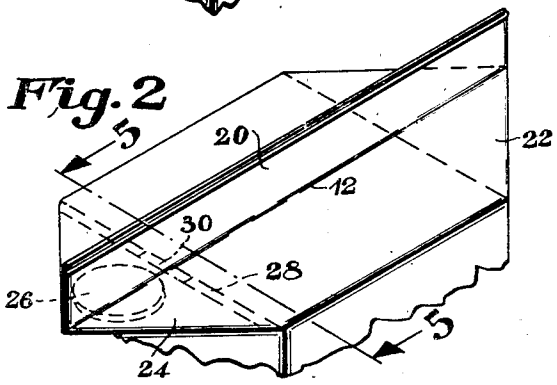

Fig. 5

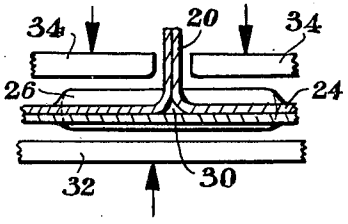

Fig. 3

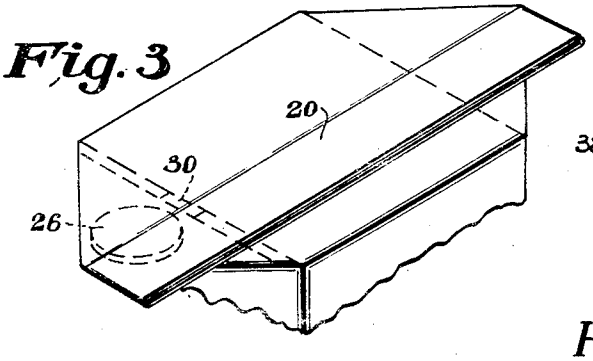

Fig. 6

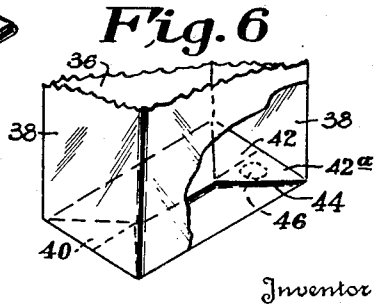

Inventor

Howard A. Rohdin

By Ross C. Hurrey

Attorney

Patented May 10, 1949 2,469,521

UNITED STATES PATENT OFFICE

2,469,521

COLORING PACKAGE FOR OLEOMARGARINE

Howard A. Rohdin, Glen Ridge, N. J.

Application June 5, 1947, Serial No. 752,772

2 Claims. (Cl. 99—148)

1

This invention relates to the art of packaging, and has for its principal object to provide a composite package for oleomargarine and the like, in which is associated a capsule containing coloring matter intended for distribution through the oleomargarine, to color the same, after the package has reached the ultimate consumer. As is well known, it is customary for oleomargarine to be distributed to retail buyers in a white or uncolored form, and the producer usually supplies also a quantity of coloring matter for incorporation therein by the purchaser, the purpose being to give the product the color of butter.

It has been proposed to package the coloring matter within the walls of the oleomargarine container, so that the required mixing, kneading, and like operations used in distributing the color through the mass can be carried out prior to opening the package or wrapper, for reasons of convenience and avoidance of waste. However, all such schemes heretofore proposed have been subject to certain disadvantages from the practical, commercial point of view.

It is accordingly an object of my invention to provide an oleomargarine package or wrapper that enables the oleo and the coloring matter to be handled as a unit through all the channels of distribution, which will enable the buyer to perform the coloring operations easily and without waste, and yet will ensure that no color can reach the oleomargarine, or vice bersa, until the proper time. A further object of the invention is to provide such a package which uses a minimum amount of the wrapping material. Such material is generally quite expensive due to the requirements of high strength, imperviousness and flexibility of the kneadable package. A still further object is to provide a design of package such that the capsule of coloring matter may be associated with the package either before or after the latter is filled with oleomargarine, thus lending itself to flexibility of production arrangements.

Still another object is to provide a package of this kind in which production of the wrapped or packaged oleomargarine is accomplished with a minimum of additional steps insofar as filling and closing the package is concerned.

Still another, and very important, object is to insure that the color containing capsule cannot enter the body of oleomargarine during or after the coloring operation.

The above and other objects and advantages of my invention will best be understood by referring to the following detailed description of

2

a preferred embodiment thereof, taken in connection with the accompanying drawings, in which:

Fig. 1 is an isometric view of one end of a suitable container for oleomargarine, prior to closing the same,

Fig. 2 is a view similar to Fig. 1 but illustrating the container end in an intermediate stage of closing,

Fig. 3 is a view similar to the above but illustrating a still further stage in the operation,

Fig. 4 is an end view of a completely closed container,

Fig. 5 is a diagrammatic view, partly in section, showing one method of sealing the coloring capsule off from the body of the oleo, the section being taken in the direction of arrows 5—5 of Fig. 2, and

Fig. 6 is a partially broken away isometric view of the invention as applied to a different form of container closure.

In general, I accomplish the objects of my invention by providing a package for the oleomargarine which is capable of being closed in the usual manner of a square bottom or flat bottom bag, the unit of coloring matter being contained in a frangible capsule or the like which is carried in one of the "ears", or triangular spaces resulting from the normal formation of closures of these types. As best shown in Fig. 1 of the drawings, the container 10 comprises a tubular member formed of any of several tough, flexible and/or resilient materials, such for example as a film of latex, rubber hydrochloride, polyvinyl chloride, polyethylene, or equivalent wrapper material. Preferably the material choosen is heat sealable, for convenience in making the closure to be described, but it is to be understood that the closure may be effected by other means than heat sealing if desired. Ordinarily, the tube 10 will be a seamless extruded tube, formed into a square cross section before the filling or closing operation, but it may equally well be formed of a seamed sheet of the material in the usual manner of bag formation.

I have indicated in Fig. 1 the fold lines which are involved in forming the preferred form of seal, comprising a line 12 round the periphery of the tube 10 and spaced slightly from its end, a similiar line 14 spaced from line 12 a distance about equal to half the side of the square cross section of the tube, and diagonal lines 16 and 18 connecting the above two lines on opposite side panels of the tube. It will be understood that these lines are illustrated in Fig. 1 in the

interests of description of the closure which is to be formed, and that they do not necessarily represent score lines, since the closure is capable of formation out of the flexible, preferred materials without the necessity of pre-scoring.

If the container formed by tube 10 is to be filled before forming the closure on that end illustrated in Fig. 1, the opposite end will, of course, already have been closed in any desired fashion. However, it is equally possible that the closure now to be desired, incorporating the unit of coloring matter, may be formed first at one end of the package, the package thereafter filled, and the opposite end then sealed with any desired kind of closure to complete the package.

In forming the closure containing the coloring matter, that end of the square tube 10 shown in Figs. 1 to 3 is first drawn into a flat, upstanding fin 20 as shown in Fig. 2, diagonal folding occurring along lines 16, 18 and the corresponding lines of the opposite side panel to form the cut-standing ears 22 and 24, in the usual manner of a diamond-fold bag bottom. A capsule 26, such as a frangible capsule of gelatin or the like, preferably in flat cylindrical form and containing the liquid coloring matter, is tucked between the flaps constituting the triangular ear 24. Preferably at this stage of the operation, the fin 20 is heat sealed in a known manner, as by heat and pressure exerted by a pair of sealing bars brought laterally against its opposite faces. Also, a narrow band 28 at the base of the isosceles triangle 24 is sealed in the same manner, but a small central area or gap 30 is left in this seal, to provide egress of the coloring liquid from ear 24 after the capsule 26 has been broken by external manipulation. Gap 30 in the seal 28 is dimensioned so as not to be capable of permitting the broken capsule 26 to pass therethrough, while providing a passage for the coloring agent.

Reference to Fig. 5 will clarify the operation of forming the above described heat seal 28, where there is shown a magnified cross section of the sealed area, a lower pressure bar 32 and a pair of upper pressure bars 34 located one on each side of the fin 20. Movement of these heated bars in the directions of the arrows in Fig. 5 will accomplish the desired seal while leaving a gap 30 as above described, since bars 34 do not extend clear up to the base of fin 20. The natural curvature at the bottoms of the sides of fin 20 aids in maintaining the two faces of the ear out of contact to provide the gap 30 as somewhat triangular in section, a condition which is accentuated by the distance between the facing ends of sealing bars 34.

If desired, of course, the sealing of fin 20 and of the band 28 may be accomplished in one operation, by the use of properly shaped sealing bars, in an obvious manner. Upon completion of the sealing step, fin 20 is preferably turned down upon the end of the package, as in Fig. 3, and thereafter the ears 22 and 24 may be turned inward to lie within the square profile of the package, as in Fig. 4. Alternatively, but less desirably, these ears could be turned to lie against respective opposed side panels of the package.

It will be observed that the above package provides a location for the color capsule 26 which is completely cut off from contact with oleomargarine in the body of the package, and utilizes, due to its flat form, practically no additional bulk, although lying entirely within its own protective pocket formed by ear 24, so that the chance of premature coloring of the contents is practically non-existent.

In use, the operator merely extends ears 22 and 24 laterally from the end of the package, to the position shown in Fig. 3, with or without erection of the fin 20, and, the contents of the package having been softened by exposure to room temperature, the capsule 26 is broken by pressure exerted through the sides of ear 24, and the liquid is forced into the body of the bag by manual manipulation, including, if desired, rolling up of ear 24. The small gap 30 allows the color to pass freely into the package body, but retains the gelatin capsule, now empty, in the ear so that it does not migrate through the oleo to some undetermined location. Obviously, the opening out of ears 22 and 24 (as well as the corresponding ears at the opposite end of the package) provides an excess of volume within the wrapper to facilitate the kneading of the package to distribute the coloring matter, and upon completion of this operation the closure ends may be re-formed roughly, the package squared up, and refrigerated to retain its shape until the time of use. All of the above operations are accomplished while the oleomargarine is fully protected, out of contact with the hands, thus eliminating the waste involved in mixing the coloring matter therewith in a bowl or other container, as well as preventing the oleo from contacting or discoloring the user's hands, clothing or the like. Also, the above results are accomplished without using any additional packaging material over that normally used in forming the wrapper alone, and, since the opened out ears provide an excess of volume, the choice of materials is extended to include many which have little resilience or stretchability.

It will have been noted from the above description that the capsule of coloring matter can be "pre-loaded" into a triangular ear at one end of an unfilled bag, and that the actual filling with oleomargarine can be accomplished at any time thereafter without any danger that the oleo will come into contact with the color capsule during such filling. This is so not only because the capsule, under these circumstances, is located out of the direct path of the material being filled into the bag, but also because the air within the triangular ear would need to be displaced in order for the oleo to enter such ear. Since there is no escape path for such air, and particularly since channel 30 is of quite small cross-section (especially when the ear is in its Fig. 4 position), no oleo can possibly enter this space. This arrangement is thus to be distinguished from packages of this general type in which a capsule of color is merely secured to an inner surface of a major wall of the package, a distinction which greatly reduces any chance that the color may be distributed into the oleo before the package reaches the user. In the present package, even a leakage of color from the capsule 26 into the surrounding space of ear 24 would not allow contact thereof with the oleo, since migration is impeded by the small cross section of channel 30 coupled with the right angle bend along seal line 28.

Fig. 6 of the drawing illustrates a possible modification of the above arrangement, in that the invention is here applied to a wrapper, container or bag whose end seal is of the type commonly applied to so called square bags. In this type of package, a gusseted tube has one end closed by a simple folding over of the end, the same being

pasted or otherwise sealed. When the bag is opened for filling, the expansion of the gusset pleats produces a bottom which is substantially flat, and is characterized by the presence of opposed internal triangular ears which lie within the profile of the bag in plan view. The formation of these ears is well known in the art (see, for example, the U. S. patent to Schmidt, No. 2,149,872, dated March 7, 1939).

As shown in Fig. 6, a bag or wrapper **36** of the kind just mentioned, when opened, has side panels **38** developed from the gussets of the bag, and the bag bottom contains the opposed ears **40** and **42**, each being an isosceles triangle in plan view. These ears are not composed of a single pocket, but each represents a pair of pockets separated by a fold along the line from the apex of said ear to its base. For example, the right hand pocket **42***a* of ear **42** in Fig. 6 is separate from the left hand pocket which is also a part of ear **42**. However, any of these four secondary pockets is available to receive a capsule of coloring matter such as capsule **46**, illustrated as inserted in pocket **42***a* through its open mouth **44**. The mouth **44** may thereafter be sealed along most of its length in the same manner as described in the previous embodiment, to prevent egress of the capsule into the package body either before or after the coloring operation has taken place, although such a seal is obviously not a positive requirement.

It will be observed that the construction of Fig. 6 does not provide the additional volume for kneading as does the turning open of the ears of the form of Figs. 1 to 5, so that the Fig. 6 modification is better adapted for use with materials providing such flexibility and resilience that the required movement of the contents can be accomplished. On the other hand, of course, such additional volume may also be obtained by closing the opposite end of the bag or wrapper with a closure (e. g. a folded-over closure) which itself permits an increase in the available package volume prior to opening.

The capsule **46** of Fig. 6 may be broken by externally applied pressure just as in the previous form of the invention, and its contents forced into the body of the package by squeezing ear portion **42***a* in much the same manner.

While I have disclosed certain preferred embodiments of the invention in connection with specific details of construction, I wish it to be understood that many changes and modifications may be made therein without departing from the scope of the invention as defined in the appended claims.

I claim:

1. An oleomargarine package comprising a wrapper snugly fitting a body of oleomargarine, a closure for said wrapper of the type comprising at least one triangular ear formed of the wrapper material, said ear being open to the interior of said package, a rupturable capsule of coloring matter in said ear and a heat seal partially closing off the opening between said ear and the space occupied by said oleomargarine, said partially closed opening providing a channel for the passage of coloring matter from the ear to the oleomargarine when the capsule is broken, said channel being restricted to retain the capsule in the ear.

2. The invention in accordance with claim 1, in which said ear is turned to lie upon a face of said package and within the profile thereof.

HOWARD A. ROHDIN.

REFERENCES CITED

The following references are of record in the file of this patent:

UNITED STATES PATENTS

Number	Name	Date
1,474,248	English	Nov. 13, 1923
2,347,640	Peters	May 2, 1944