US 20050166613A1

(19) United States

(12) Patent Application Publication

(10) Pub. No.: US 2005/0166613 A1

(43) Pub. Date: Aug. 4, 2005

Oakner et al.

(54) DRAIN PAN OVERFLOW SAFETY SWITCH

(76) Inventors: **Stuart P. Oakner**, Boca Raton, FL (US); **Mark T. Brannick**, Boca Raton, FL (US); **Donna E. Oakner-Brannick**, Boca Raton, FL (US)

Correspondence Address:
Robert M. Downey
Robert M. Downey, P.A.
Suite 300
601 South Federal Highway
Boca Raton, FL 33432 (US)

(21) Appl. No.: **10/770,615**

(22) Filed: **Feb. 2, 2004**

Publication Classification

(51) **Int. Cl.**[7] **F25D 21/00**; F25D 21/14

(52) **U.S. Cl.** **62/150**; 62/285

(57) **ABSTRACT**

A safety switch prevents overflow of condensate that collects in the drain pan of an air-cooling system. The overflow safety switch attaches to the condensate drainage system and is electrically connected to a circuit of the air-cooling system, a power circuit, a control circuit and/or an alarm circuit. The switch includes a tube that extends within the condensate drain pan or any other water conducting point in the condensate drainage system. A reed switch is sealed within the tube and a float containing a magnet is moveably supported on the exterior of the tube. The float ascends or descends in response to the level of the liquid condensate within the drain pan. As the float moves relative to the tube, the magnet causes the reed switch to open, thereby interrupting operation of the air-cooling system and/or actuating the alarm circuit.

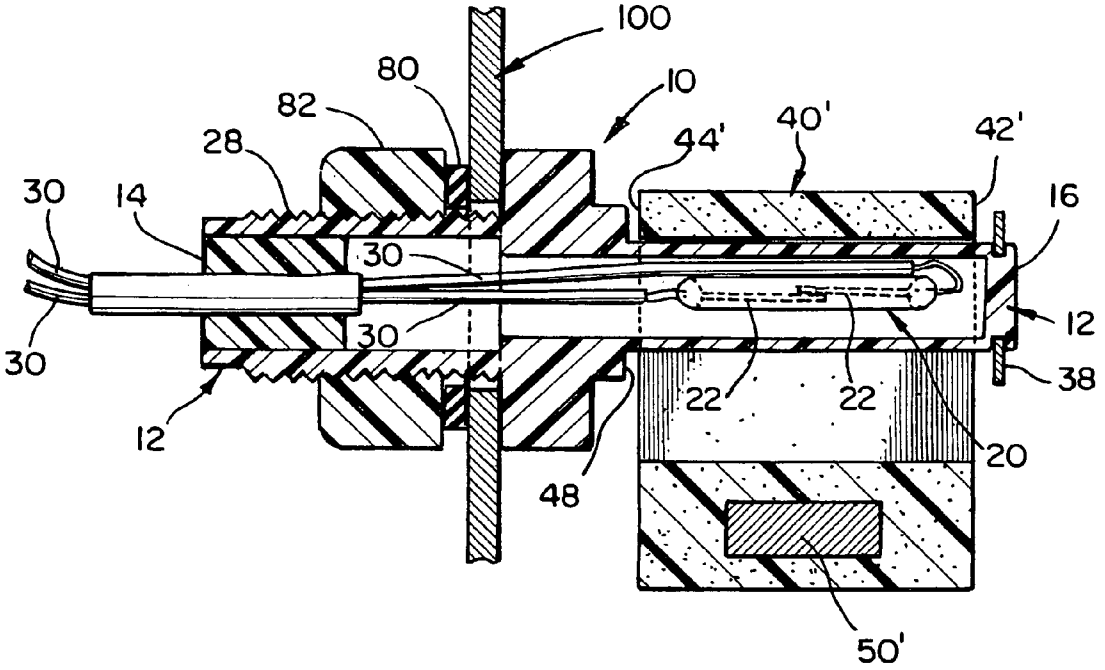

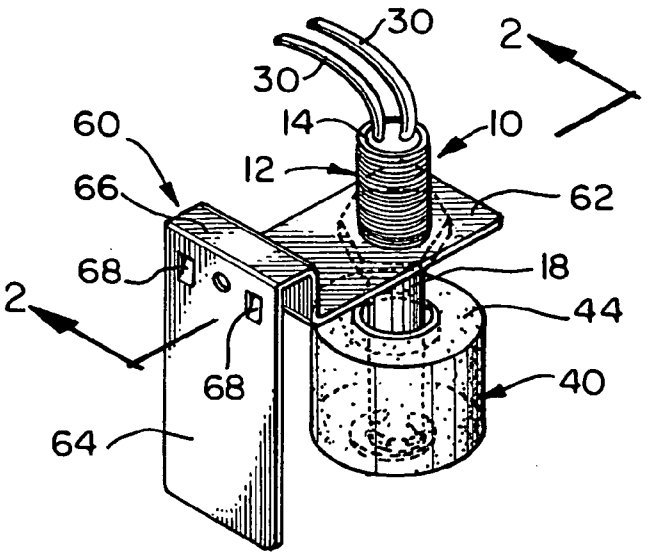
30
30
2
14
10
60
12
66
62
68
18
2
44
68
40
64

FIG. 1

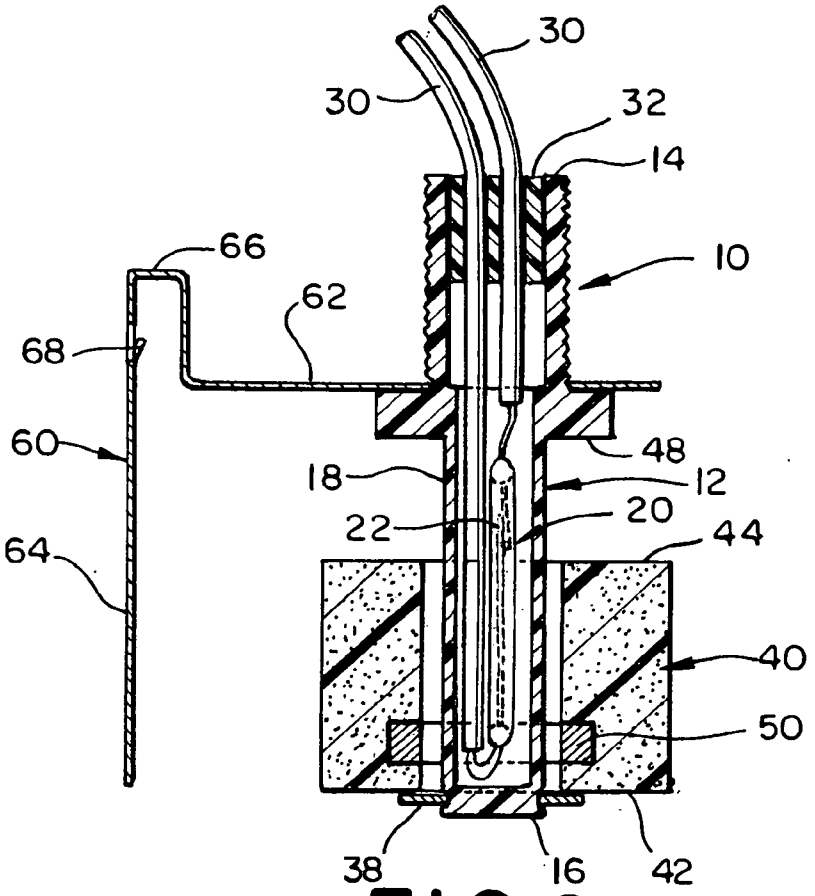
30
30
32
14
66
10
62
68
60
48
18
12
22
20
44
64
40
50
38
16
42

FIG. 2

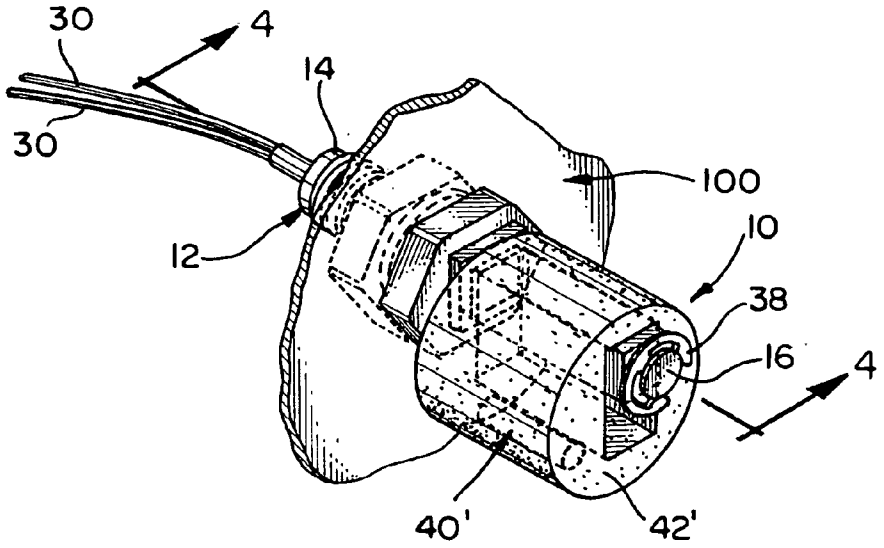
30
4
14
30
100
10
12
38
16
4
40'
42'

FIG. 3

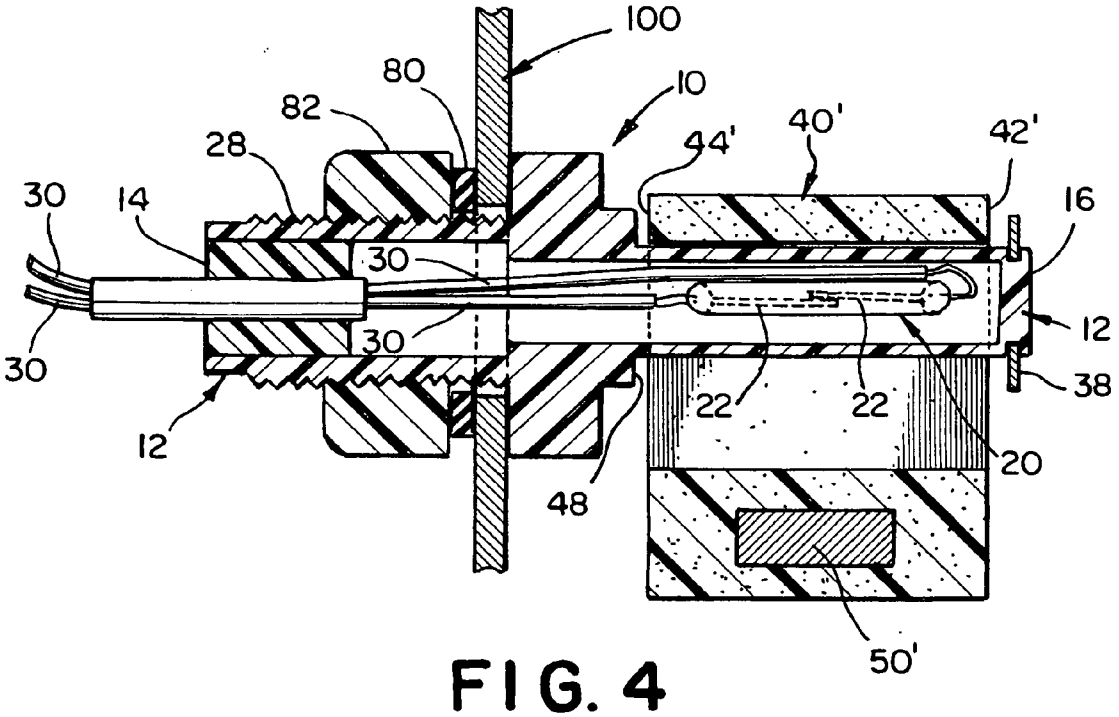
100
80
10
82
28
44'
40'
42'
30
14
16
30
12
30
30
38
22
22
12
20
48
50'

FIG. 4

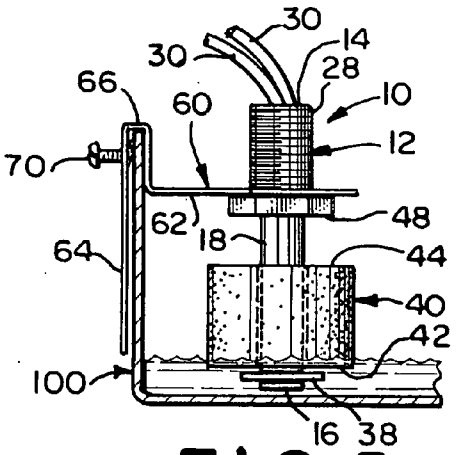

FIG. 5

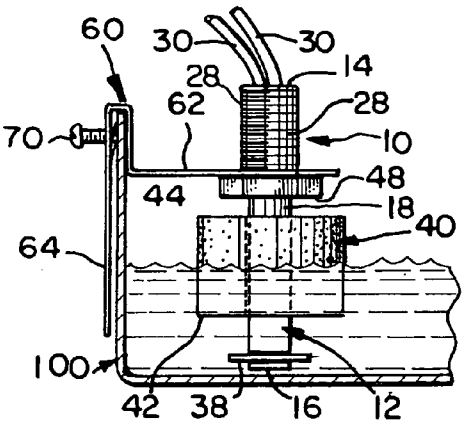

FIG. 6

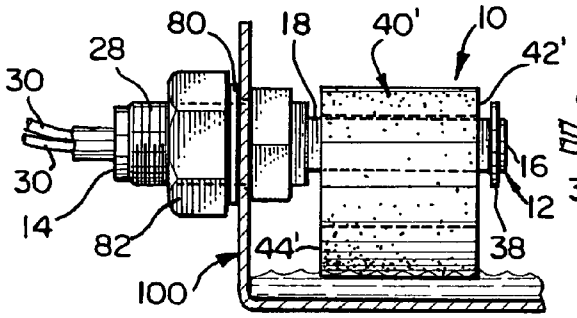

FIG. 7

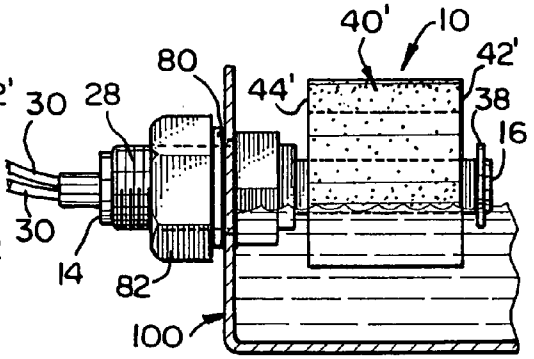

FIG. 8

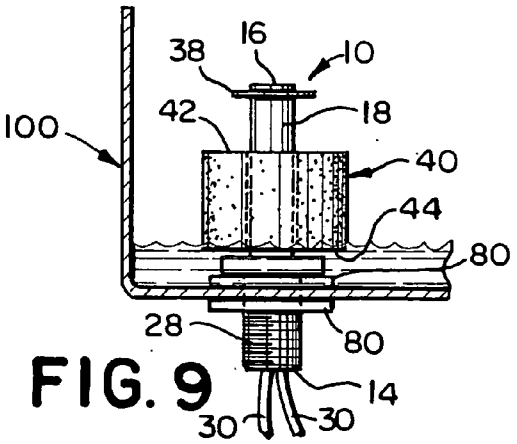

FIG. 9

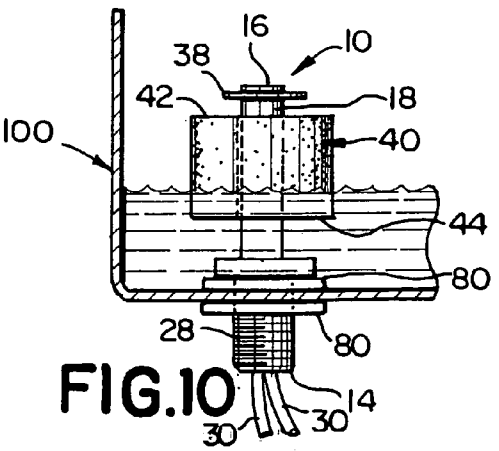

FIG.10

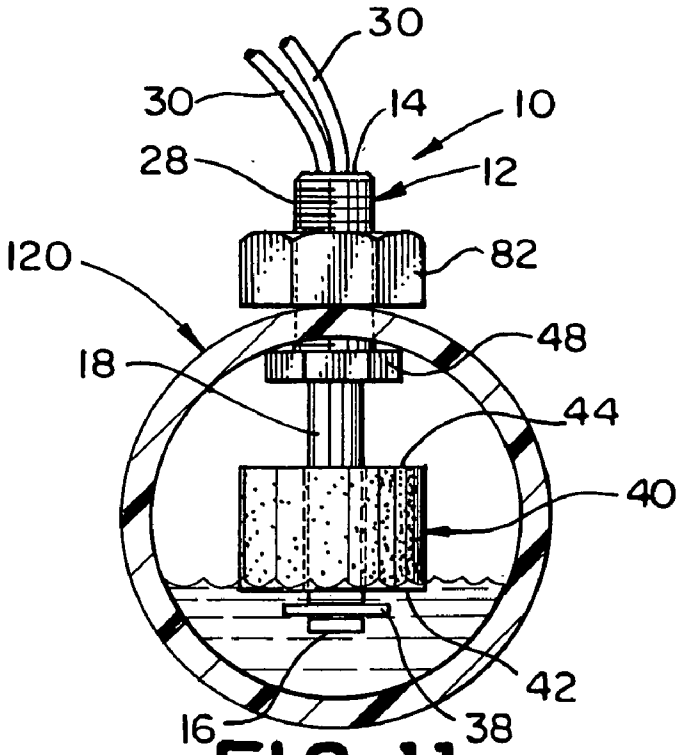
30
30
14
10
28
12
120
82
48
18
44
40
42
16
38

FIG. 11

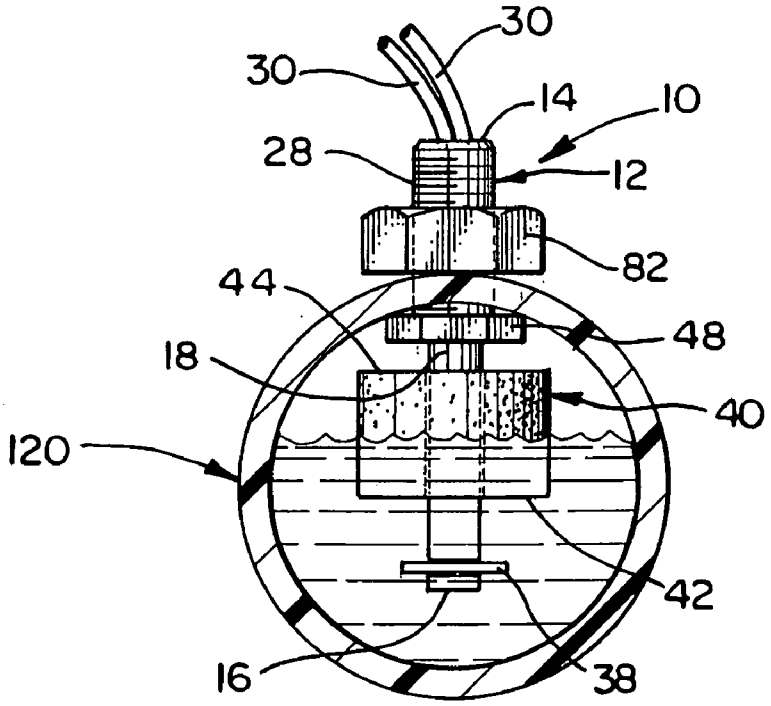
30
30
14
10
28
12
82
44
48
18
40
120
42
16
38

FIG. 12

DRAIN PAN OVERFLOW SAFETY SWITCH

BACKGROUND OF THE INVENTION

[0001] 1. Field of the Invention

[0002] The present invention relates to electrical condensate overflow safety switches and, more particularly, to a float actuated magnetic reed switch attachable to the condensate drainage system of an air-cooling system for deactivating the system upon the level of condensate in the condensate drainage system reaching a predetermined level, thereby preventing collected liquid condensate from overflowing the condensate drainage system.

[0003] 2. Discussion of the Related Art

[0004] Most residential and commercial air-conditioning and refrigeration units employ an evaporator coil to dehumidify and cool ambient air in dwellings, climate controlled storage spaces, work spaces, and the like. The evaporator coil is frequently located indoors, often above the occupied areas of the building that it serves. Since the coil is colder than the air being conditioned, it condenses water liquid while in operation. This condensate liquid is typically collected in a drain pan, usually positioned under the coil, with the drain pan having one or more outlet ports for attaching a drain pipe for outflow of the condensate. Many units have a secondary drain pan which may not have any outlets or connecting drain pipes. During normal operation, the condensate water liquid drains through one or more of the outlets of the main drain pan, through a drain pipe and out from the building. However, the drain pan, pan outlets and drain pipe, often become occluded by algae, mold, mildew, dirt and other accumulated debris. An occlusion in the outlets and/or drain pipes will eventually result in drain pan overflows that can cause water damage to building ceilings, walls, flooring, and associated building components, which necessitate costly repairs. In units which use a secondary drain pan, the liquid condensate will first overflow into the secondary drain pan. In some instances, the secondary drain pan will overflow and cause water damage.

SUMMARY OF THE INVENTION

[0005] The present invention is directed to an overflow safety switch for attachment to the condensate drainage system of an air-cooling system in order to prevent overflow of condensate which collects in the condensate drainage system. In accordance with various embodiments of the invention, the overflow safety switch may be attached to one of the vertical side walls of the drain pan or through the bottom of the drain pan or drain pipe. In one embodiment, a brace attaches to the side wall of the drain pan and holds the overflow safety switch in a vertical upright position within the drain pan. In another embodiment, the overflow safety switch is mounted through the side wall and maintained in a generally horizontal position. In yet another embodiment, the overflow safety switch is mounted through the bottom of the drain pan so that the safety switch is held vertically upright within the drain pan. In still a further embodiment, the overflow safety switch is connected to a drain pipe or drain outlet extending from the drain pan.

[0006] In each embodiment, the overflow safety switch is electrically connected to either a circuit of the air-cooling system, a power circuit or an alarm circuit. The overflow safety switch includes a tube which extends within any water conducting area of condensate drainage system. A reed switch is sealed within the tube and a float containing a magnet is moveably supported on the exterior of the tube. The float ascends or descends in response to the level of the liquid condensate within the condensate drainage system. As the float moves relative to the tube, the magnet causes the reed switch to open or close, thereby interrupting operation of the air-cooling system and/or actuating the alarm circuit. In yet a further embodiment, a normally open reed switch is connected to an alarm circuit, wherein movement of the float and magnet, in response to a rise in liquid in the drain pan, results in closing of the switch and activation of the alarm circuit.

OBJECTS AND ADVANTAGES OF THE INVENTION

[0007] With the forgoing in mind, it is a primary object of the present invention to provide a condensate overflow safety switch for quick and easy attachment to the condensate drainage system of an air-cooling system, and wherein the overflow safety switch is structured and disposed to interrupt operation of the air-cooling system and/or activate an alarm upon the condensate liquid reaching a predetermined level at any point in the condensate drainage system, thereby preventing the condensate from overflowing the drain pan.

[0008] It is a further object of the present invention to provide an overflow safety switch characterized by simple mechanical and electrical design, compactness, non-corrosive, low manufacturing complexity, water sealed design and high operational reliability.

[0009] It is still a further object of the present invention to provide a condensate overflow safety switch which is structured and disposed for easy and quick attachment to the condensate drainage system of an air-cooling system, and wherein the overflow safety switch is structured and disposed to stop generation of condensate liquid in the event of a drain system occlusion, thereby preventing collected condensate liquid from overflowing the condensate drainage system which might otherwise result in property damage.

[0010] These and other objects and advantages of the present invention are more readily apparent with referenced to the detailed description and accompanying drawings.

BRIEF DESCRIPTION OF THE DRAWINGS

[0011] For a fuller understanding of the nature of the present invention, reference should be made to the following detailed description taken in conjunction with the accompanying drawings in which:

[0012] **FIG. 1** is a top perspective view of a condensate overflow safety switch and mounting bracket for attaching the safety switch to the side wall of a drain pan in an air-cooling system, in accordance with one preferred embodiment of the present invention;

[0013] **FIG. 2** is a cross-sectional view taken from the line indicated as **2-2** in **FIG. 1**;

[0014] **FIG. 3** is a perspective view, shown in cutaway, illustrating a condensate overflow safety switch mounted

through the side wall of a drain pan in an air-cooling system, in accordance with a second preferred embodiment of the present invention;

[0015] **FIG. 4** is a cross-sectional view taken along the line indicated as **4-4** in **FIG. 3**;

[0016] **FIGS. 5 and 6** are side elevation views, shown in partial cross-section, showing the overflow safety switch of **FIG. 1** mounted to the side wall of a drain pan and illustrating a sequence of operation of the overflow safety switch between a low condensate level condition, wherein the overflow safety switch is in an normally closed circuit condition, and a raised condensate liquid level, wherein the overflow safety switch is in an open circuit condition to deactivate the air-cooling system;

[0017] **FIGS. 7 and 8** are side elevational views, shown in partial cross-section, showing the overflow safety switch of **FIG. 3** mounted to the side wall of a drain pan and illustrating a sequence of operation of the overflow safety switch between a low condensate level condition, wherein the overflow safety switch is in a normally closed circuit condition, and a raised condensate liquid level, wherein the overflow safety switch is in an open circuit condition to deactivate the air-cooling system;

[0018] **FIGS. 9 and 10** are side elevational views, shown in partial cross-section, showing the overflow safety switch mounted through the bottom of the drain pan, in accordance with yet another embodiment of the invention, and illustrating a sequence of operation of the overflow safety switch between a low condensate level condition, wherein the overflow safety switch is in a normally closed circuit condition, and a raised condensate liquid level, wherein the overflow safety switch is in an open circuit condition to deactivate the air-cooling system; and

[0019] **FIGS. 11 and 12** are side elevational views, shown in partial cross-section, showing the overflow safety switch mounted within a drain pipe leading from the drain pan of a condensate drainage system and illustrating a sequence of operation of the overflow safety switch between a low condensate level condition, wherein the overflow safety switch is in a normally closed circuit condition, and a raised condensate liquid level, wherein the overflow safety switch is an open circuit condition to deactivate the air cooling system.

[0020] Like reference numerals refer to like parts throughout the several views of the drawings.

DETAILED DESCRIPTION OF THE PREFERRED EMBODIMENTS

[0021] In each of the preferred embodiments, as shown throughout the drawings, the overflow safety switch assembly is generally indicated as **10** and includes a hollow tube **12** having an open end portion **14** and a closed end portion **16** with an outer surface **18** extending therebetween. A reed switch **20** has overlapping electrical contacts **22** connected to insulated wires **30**. The contacts **22** of the reed switch **20** and the exposed ends of the wires **30** are maintained within the hollow tube **12**. A sealing material **32**, for example plastic or epoxy, insulates the reed switch **20** and exposed ends of the wires **30** within the hollow tube **12**, thereby preventing contact with moisture. A portion of the outer surface **18** may be provided with threads **28** to facilitate attachment of the switch assembly to either a mounting clip **60**, as shown in **FIGS. 1 and 2**, or directly to the drain pan **100** of an air-cooling system, as seen in **FIGS. 3-4** and **7-10**. The threads **28** on the outer surface **18** of the hollow tube serve to permit adjustable positioning of the hollow tube relative to the drain pan **100**, as described more fully hereinafter. The overflow safety switch assembly may also be connected in-line to the drain pipe extending from the drain pan.

[0022] Referring now to the embodiment shown in **FIGS. 1-2** and **5-6**, the overflow switch assembly **10** is provided with a float body **40** having a first end face **42** and a second end face **44**. A removable stopper mechanism **38**, such as a C-clip, is engaged onto the outer surface **28** of the hollow tube **12**, adjacent the closed end portion **16**. The float body **40'** is captivated on the hollow tube **12**, between the end portions **14, 16** and is slidably moveable between the stopper mechanism **38** and an upper shoulder **48** defined by a fixed hex nut configuration integrally formed or adjustably moveable on the hollow tube. The float body **40** is moveable between a lowered position, as seen in **FIGS. 2 and 5**, and a raised position, as seen in **FIG. 6**, in response to a raising condensate liquid level within the drain pan. The float body **40** is provided with a magnet **50** which may be exposed on the inner diameter of the float body. The magnet **50** is positioned in confronting relation to the outer surface **18** of the hollow tube and is disposed closer to the first end face **42** then the second end face **44** of the float body **40**. When the wires of the reed switch are connected to a circuit of the air-cooling system, the float body **40** is mounted with the first end face **42** facing toward the stopper mechanism **38** near the end portion **16**. When the wires are connected to an alarm circuit, the float body is mounted with the second end face **44** facing toward the stopper mechanism **38**. In the embodiment shown in **FIGS. 1-2** and **5-6**, the wires are connected to the circuit of the air-cooling system. In this instance, the contact elements **22** of the reed switch **20** are normally closed, maintaining a closed circuit condition, with the float body **40** at the lowered position, as seen in **FIGS. 2 and 5**. As the condensate liquid fluid level rises within the drain pan **100**, the float body **40** moves upwardly along the hollow tube **12**. Eventually, the magnet **50** is moved into position to cause the contact elements **22** of the reed switch **20** to separate, as shown by the float body position in **FIG. 6**, thereby opening the circuit and disabling the air-cooling system. Accordingly, when the condensate fluid level reaches a predetermined height in the drain pan **100**, as seen in **FIG. 6**, the reed switch **20** is opened to disable the air-cooling system and prevent further production of condensate liquid until the occlusion, blockage or other drainage problem is fixed.

[0023] As seen in **FIGS. 1-2** and **5-6**, the overflow switch assembly **10** is supported vertically in the drain pan **100** so that the lower closed end portion **16** extends downwardly within the drain pan, with the closed end positioned in close spaced relation to the bottom surface of the drain pan. A clip **60** is used in this particular embodiment for supporting the overflow switch assembly **10** in this position. In a preferred embodiment, the clip **60** is formed from a single piece of material, such as a metal alloy, and includes a horizontal plate **62**, a vertical plate **64** and an inverted U-shaped portion **66** between the horizontal and vertical plates. The inverted U-shaped portion **66** is specifically structured and disposed to slip easily over the top edge of the drain pan and hold

securely, as seen in **FIGS. 5 and 6**. Tabs **68** are provided on the vertical plate for frictional engagement against the outer surface of the drain pan side wall, thereby holding the clip **60** in place on the drain pan **100**. A screw **70** may be used for tightly securing the clip **60** onto the drain pan. Once the clip is attached to the drain pan, the position of the overflow switch assembly relative to the bottom of the drain pan may be adjusted by threadably advancing the hollow tube **12** relative to the horizontal plate **62** of the clip **60**. To this end, it should be noted that, in a preferred embodiment, a through hole is formed through the horizontal plate **62** of the clip and is specifically sized and configured for threadable engagement with the exterior threads **28** on the outer surface **18** of the tube **12**.

[**0024**] Referring to the embodiment shown in **FIGS. 3-4** and **7-8**, a float body. **40'** is supported on the hollow tube **12** between the stopper mechanism **38** on the closed end portion **16** and the shoulder **48**. In this particular embodiment, the hollow tube **12** is mounted horizontally through the side wall of the drain pan **100** and the annular float body **40'** is provided with an elongate rectangular passage **41** extending between the first end face **42'** and the opposite second end face **44'**. A magnet **50'** is embedded within a lower portion of the float body and is normally spaced from the outer surface **18** of the hollow tube, as seen in **FIG. 4**, a sufficient distance so that there is no magnetic influence exerted on the elements **22** on the reed switch **20** within the hollow tube **12**. As the condensate liquid level rises within a drain pan **100**, the float **40'** naturally rises relative to the hollow tube **12**, eventually reaching the position shown in **FIG. 8**. At this position, the magnet **50'**within the lower portion of the float body **40'** is moved close to the outer surface **18** of the hollow tube **12**, resulting in a magnetic attraction between the magnet **50'**and reed switch **20**, and causing the elements **22** of the reed switch to separate, thereby opening the circuit and disabling the air-cooling system. As seen in **FIG. 4**, a rubber O-ring seal **80** or washer is fitted about the outer surface **18**, at the threaded portion **28** of the hollow tube, and is placed against the outer surface of the side wall of the drain pan **100**, surrounding a through hole drilled through the drain pan. This seal **80** is held tight against the outer surface of the drain pan with a nut **82** or other fastening device which further serves to secure the switch assembly **10** in the horizontal position and attached to the side wall of the drain pan. The seal **80**, when tightly sandwiched between the nut **82** and outer surface of the drain pan side wall prevents leakage through the hole in the side wall of the drain pan.

[**0025**] Referring to **FIGS. 9 and 10**, a further embodiment of the overflow switch assembly **10** is shown. In this particular embodiment, the structure of the switch assembly **10** is similar to that shown in connection with the embodiment of **FIGS. 1-2**. In the embodiment shown in **FIG. 9** and **10**, the hollow tube **12** and the reed switch **20** are mounted upwardly through the bottom of the drain pan so that the closed end portion **16** is spaced sufficiently above the inner bottom surface of the drain pan. To secure the overflow safety switch **60** to the drain pan **100**, a hole may be drilled through the bottom of the drain pan. The hole may be sized and configured for threadable, advanced passage of the threaded end portion of the hollow tube. Once securing and adjusting the hollow tube **12** at the desired height within the drain pan, a seal **80** may be placed around the hole in the bottom of the drain pan through which the hollow tube extends. Similar to the embodiment of **FIGS. 1-2**, the float **40** includes a magnet **50** which moves with the float body in relation to the outer surface **18** of the hollow tube **12** and the reed switch **20** therein. In the position shown in **FIG. 9**, the annular float body **40** is in lowered position, due to a low condensate liquid level in the drain pan **100**. As the condensate liquid level rises, the annular float body **40** moves upwardly along the hollow tube **12** causing the magnet **50** within the float body to separate. This results in opening the circuit and disabling the air-cooling system so that no further condensation is produced until the blockage or other drainage problem is fixed.

[**0026**] Referring to **FIGS. 11 and 12**, the overflow switch assembly **10** is shown in yet a further embodiment wherein the switch assembly **10** is fitted to a pipe **120** with the hollow tube **12** extending through the pipe so that the upper shoulder **48**, closed end portion **16** and float body **40** are positioned within the pipe. As seen in **FIGS. 11 and 12**, the hollow tube **12** is fixed to the pipe **120** so that the outer surface **18** between the upper shoulder **48** and stopper mechanism **38** is vertically positioned, thereby permitting movement of the float body **40** between a lowered position and a raised position as the fluid liquid level in the pipe changes. **FIG. 11** illustrates a normal condition, wherein fluid is flowing freely and unobstructed through the pipe **120**. In this instance, the fluid level remains low with the float body **40** at the lowered position, thereby maintaining the overflow safety switch in a normally closed circuit condition. In the event the liquid level rises within the pipe **120**, due to a clog or other obstruction, the float body **40** rises, as seen in **FIG. 12**, to operate the overflow safety switch to the open circuit condition, thereby interrupting electric current flow through conductors **30**. The installation of the overflow safety switch in the manner shown in **FIGS. 11 and 12** is particularly useful in drain pipes of an air cooling system. In this instance, the overflow safety switch **10** is fitted in-line to the drain pipe leading from a drain pan of the air cooling system's drain system. In the event of a down line clog or other obstruction in the drain pipe **120**, the liquid level will rise in the pipe, as shown in **FIG. 12**. When the float body moves up to the raised position seen in **FIG. 12**, the circuit is opened and the air cooling system is disabled so that no further condensation is produced until the blockage in the drain pipe is removed. Accordingly, in the event of a blockage or other drainage problem, the air cooling system will be disabled with little or no liquid accumulation in the drain pan.

[**0027**] While the instant invention has been shown and described in accordance with preferred and practical embodiments thereof, it is recognized that departures from the instant disclosure are contemplated within the spirit and scope of the present invention.

What is claimed is:

1. An overflow safety switch for a drain system having a drain pan, drain pan outlets, and pipes in fluid flow communication with the drain pan and extending therefrom, said overflow safety switch comprising:

a tubular member;

a mounting assembly for attaching said overflow safety switch to the drain system so that at least a portion of said tubular member extends within the drain system;

a float body moveably supported on said tubular member and being structured and disposed to move relative to said tubular member, between a first position and a second position, in response to a change in liquid level in the drain system;

at least one magnetic element carried by said float body; and

a reed switch connected to electric conductors and sealed within said tubular member, said reed switch being magnetically responsive to said at least one magnetic element in a manner which causes said reed switch to close when said float body is at said first position thereby permitting electric current flow through the electric conductors, and which further causes said reed switch to open when said float body moves to said second position thereby interrupting electric current flow through the electric conductors.

2. The overflow safety switch as recited in claim 1 wherein said mounting assembly comprises:

a clip structured and disposed for removable attachment to a side wall of the drain pan.

3. The overflow safety switch as recited in claim 2 wherein said clip is structured for attachment to said tubular member for supporting said tubular member in a vertical, upright position within the drain pan.

4. The overflow safety switch as recited in claim 3 wherein said clip extends between said tubular member and the side wall of the drain pan to support said tubular member in spaced relation to the side wall of the drain pan with said float body positioned within the drain pan.

5. The overflow safety switch as recited in claim 4 wherein said clip is structured and disposed for adjustably positioning said tubular member relative to the reservoir of the drain pan.

6. The overflow safety switch as recited in claim 5 wherein said clip is structured and disposed to permit vertical adjustment of said tubular member relative to the reservoir and a bottom of the drain pan.

7. The overflow safety switch as recited in claim 1 wherein said mounting assembly comprises:

a through hole formed through the drain system and sized for sealed passage of said tubular member therethrough.

8. The overflow safety switch as recited in claim 7 wherein said mounting assembly further comprises:

an O-ring or other seal for providing a liquid tight seal about said tubular member and said through hole.

9. The overflow safety switch as recited in claim 7 wherein said tubular member includes screw threads formed about an outer surface for threaded engagement with the through hole.

10. The overflow safety switch as recited in claim 9 wherein said tubular member is adjustably positionable relative to the drain pan.

11. An overflow safety switch device for a drain system having a reservoir for collecting liquid, said overflow safety switch device comprising:

an elongate housing;

a mounting structure for supporting said housing within the reservoir;

a magnetically driven reed switch connected to electric conductors and sealed within said housing;

a float body moveably captivated on an exterior of said housing and moveable relative to said housing, between a first position and a second position, in response to a change in liquid level in the reservoir;

at least one magnetic element carried by said float body and positioned and disposed to magnetically drive said reed switch between a closed circuit position, thereby enabling electric current flow through the conductors and an open circuit position, thereby interrupting electric current flow through the conductors, as said float body moves between said first and second positions.

12. The device as recited in claim 11 wherein said mounting structure comprises:

a clip structured and disposed for removable attachment to the drain system.

13. The device as recited in claim 12 wherein said clip is structured for attachment to said elongate housing for supporting said elongate housing in a vertical upright position with said float body positioned within the reservoir.

14. The device as recited in claim 13 wherein said clip is structured and disposed for adjustably positioning said housing relative to the reservoir.

15. The device as recited in claim 11 wherein said mounting structure comprises:

a through hole formed through the drain system and sized for water sealed passage of said housing therethrough.

16. The device as recited in claim 15 wherein said housing includes screw threads formed about an outer surface for threaded engagement with the through hole in the drain system.

17. An overflow safety switch device for a liquid collecting drain pan, said overflow safety switch device comprising:

an elongate housing;

a mounting structure for supporting said housing within the drain pan;

a magnetically driven reed switch sealed within said housing and including a pair of contacts each connected to an electric conductor and operable between a closed circuit position wherein said contacts are touching one another, and an open circuit position wherein said contacts are separated from one another;

a float body moveably captivated on an exterior of said housing and moveable relative to said housing, between a first position and a second position, in response to a change in liquid level in the drain pan; and

at least one magnetic element carried by said float body and being positioned and disposed to magnetically influence said contacts of said reed switch in a manner which causes said contacts to move between said

closed circuit position and said open circuit position as said float body moves between said first and second positions.

18. The device as recited in claim 17 wherein said mounting structure comprises:

a clip structured and disposed for removable attachment to the drain pan, and said clip being structured for supporting said housing in a vertical, upright position within the drain pan.

19. The device as recited in claim 18 wherein said clip is structured and disposed for adjustably positioning said housing relative to the drain pan.

20. The device as recited in claim 17 wherein said mounting structure comprises:

a through hole formed through the drain pan and sized for water-tight, sealed passage of said housing therethrough.

* * * * *