June 13, 1939. L. ROVNER 2,161,979

APPARATUS FOR DETECTING IONIZING RADIATIONS OF VERY LOW INTENSITY

Filed April 22, 1938

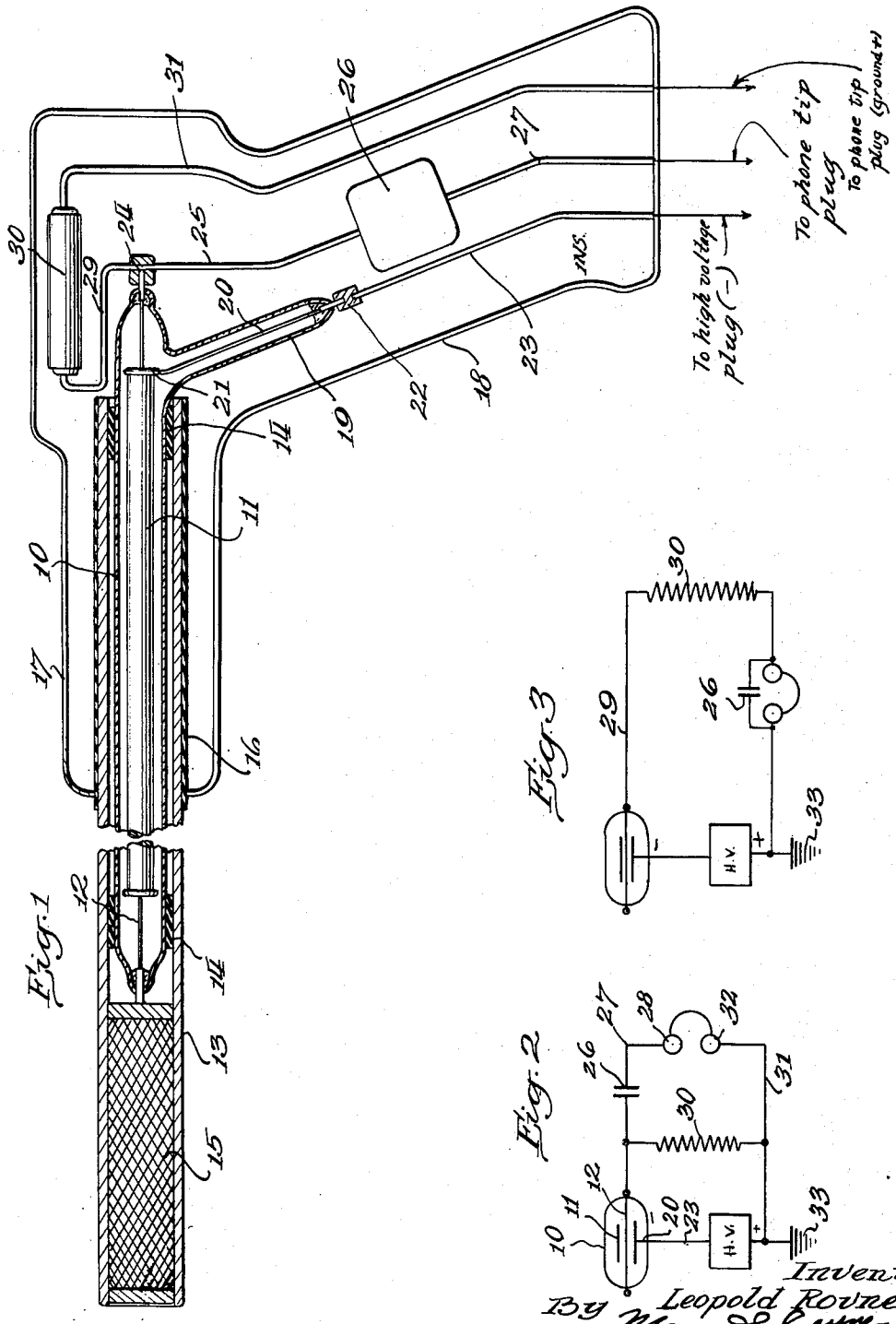


Fig. 1

Fig. 2

Fig. 3

Inventor.
Leopold Rovner
By Maurice S. Cayne Atty

Patented June 13, 1939 2,161,979

# UNITED STATES PATENT OFFICE

2,161,979

## APPARATUS FOR DETECTING IONIZING RADIATIONS OF VERY LOW INTENSITY

Leopold Rovner, Chicago, Ill., assignor of one-half to Prothero Radium Memorial, a corporation of Illinois

Application April 22, 1938, Serial No. 203,716

7 Claims. (Cl. 250—83)

This invention relates generally to a novel and improved apparatus in which a counter tube is employed for observing ionizing radiations of very low intensity and has for its main object a novel and improved construction of counter tube and apparatus whereby the same may be employed as a minimum signal directional device for detection of, and for directional localization of, a small source of penetrating radiation.

Another object of the invention is to provide in an apparatus of the character described, a novel and improved construction of counter tube so proportioned as to have directional characteristics whereby the same may be effectively used for directional localization of a small source of penetrating radiation.

A further object of this invention is to provide in an apparatus of the character described a novel and improved construction of counter tube, comprising a cathode cylinder containing an axially mounted central anode filament, the cathode cylinder being made of such dimensions that the longitudinal cross-section area in relation to the end-on cross-section area is much greater than unity.

A still further object of this invention is to provide a counter tube for the purpose hereinabove described having its cathode cylinder so proportioned that its length is relatively great as compared to its diameter, whereby the same will be highly effective for directional localization of a small source of penetrating radiation.

A still further object of this invention is to provide a novel and improved construction of apparatus within which a counter tube of the above-described characteristics may be mounted, said apparatus including an axially mounted radiation stopping shield.

A still further object of this invention is to provide in an apparatus of the character described, a counter tube for the detection of a small source of penetrating radiation, said apparatus having mounted therein means for excluding radiations coming in along the direction of the longitudinal axis of said tube.

A still further object of the invention is to provide in an apparatus of the character described, a novel and improved construction of counter tube so arranged therein as to be capable of indicating direction of a small source of penetrating radiation by registering a minimum in the rate of the signal pulses.

A still further object of the invention is to provide in an apparatus of the character described a novel and improved electrical pickup circuit, within which said counter tube may be arranged.

A still further object of the invention is to provide an apparatus of the character described, which will be simple in construction, assembly and operation, which will be compact and durable, and which will at the same time be highly efficient for carrying out the purposes for which it is designed.

With the foregoing and other objects in view which will appear as the description proceeds, the invention consists in certain novel features of construction, arrangement and combination of parts hereinafter fully described, illustrated in the accompanying drawing, and particularly pointed out in the appended claims, it being understood that various changes in the form proportion, size and minor details of the structure may be made without departing from the spirit or sacrificing any of the advantages of the invention.

For the purpose of facilitating an understanding of my invention, I have illustrated in the accompanying drawing, a preferred embodiment thereof, from an inspection of which, when considered in connection with the following description, my invention, its mode of construction, assembly and operation, and many of its advantages should be readily understood and appreciated.

Referring to the drawing in which the same characters of reference are employed to indicate corresponding or similar parts throughout the several figures of the drawing:

Fig. 1 is a longitudinal cross-sectional view through an apparatus constructed in accordance with the principles of my invention;

Fig. 2 is an electrical wiring diagram, showing an improved electrical circuit for my apparatus;

Fig. 3 is a modified electrical circuit that may be used with my improved apparatus.

The counter tube which is generally referred to as a Geiger-Muller tube is essentially a gas-filled diode consisting of a hollow cylindrical conductor mounted axially about a central conducting filament. Under the influence of an external source of penetrating radiation (which may project ionizing particles to within the "sensitive volume" of the tube, or which may effect the release of ionizing particles within that volume) the counter tube mechanism initiates a process of "collision ionization" that produces an electrical discharge through the gas between the cathode and anode. A tube of this type can respond to a single ionizing particle, that is to say a single electron, and hence is a radiation detector of extreme sensitivity.

The counter tube is sensitive to penetrating radiations directed toward it from anywhere over a geometrical sphere centered on the mid-point of the tube axis. In a field of parallel rays of constant intensity, the tube would register amounts of radiation in direct proportion to the size of the intercepting cross-section area of the "sensitive volume" (the space enclosed by the

cathode cylinder). Due to this fact, most counter tubes have inherent directional properties whenever they are constructed with cathode cylinders whose dimensons result in a ratio of longitudinal cross-section area to end-on cross-section area not equal to one. In general, these tubes present more area from their sides than from their ends. That is, the ratio of the longitudinal cross-section area to the end-on cross-section area is greater than one, so that they are more sensitive to radiation directed perpendicularly toward the axis (or having a perpendicular component) than to radiation directed along the axis. It is one of the features of this invention to utilize this property of the tubes in making directional counter tube apparatus for detecting and locating small sources of penetrating radiation.

In the use heretofore made of this type of counter tube for locating or detecting small sources of penetrating radiation, the counter tube is mounted within a massive cylinder of radiation-shielding material made so as to provide enough metal thickness to exclude radiation from all directions except through a portal at one end on the axis of the tube. In this known apparatus the direction is indicated by a maximum in the rate of the signal pulses. The counter tube necessarily receives the radiation along the direction of its least efficient response, that is, along the axis. Furthermore, the apparatus as heretofore used is sensitive to radiations from only a very limited portion of the whole geometrical sphere and hence is a low efficiency detector, since it will have a very weak response in the presence of an active source unless it is properly aimed.

Furthermore, in order to properly shield an apparatus of this character, a considerable weight ranging anywhere from twenty to fifty pounds of metal is required for even a small portable detector unit, such, for example, as that used for finding radium, thereby making the apparatus unwieldy.

In my improved construction, I provide a counter tube arrangement, designed to receive most of the radiation in the direction of the optimum response of the tube (direction perpendicular to axis of tube). In order to exclude radiations coming in along the direction of the axis, I provide a very small radiation-shielding cylinder of proper length at one end on the projected axis of a long cylinder counter tube. My improved apparatus will, therefore, indicate direction by a minimum in the rate of the signal pulses. With this improved type of apparatus, it will be noted that the same will be sensitive to radiation over almost the whole geometrical sphere and will readily respond without being aimed whenever it is in the presence of a radioactive source of penetrating radiation.

In the drawing, I have illustrated one embodiment of my improved invention, which is an instrument particularly adapted for detection of and for directional localization of a small source of penetrating radiation, that is, radiations such as gamma rays, X-rays, or high-speed ionizing particles.

Referring to the drawing more specifically by characters of reference, my improved instrument comprises a tube of the Geiger-Muller type generally designated by the reference character 10, formed of glass or any other radiation-transparend material, said tube having mounted therein a hollow cylinder 11 of suitable conducting material, such as metal or metal gauze, said cylinder being relatively long with relation to its diameter and forming the cathode of my improved counter tube.

Mounted within the tube 10 and extending axially through the hollow conducting cylinder 11, is the central conducting filament 12, which forms the anode of my improved counter tube. The tube 10 is filled with a suitable gas and is suitably sealed, as shown in the drawing, and is mounted in a cylinder 13, the sides of said tube 10 being spaced from the inner wall of the cylinder 13 by means of the spacing rings 14. The cylinder 13 extends some distance beyond the end of the tube 10 and has disposed in its said extended end a radiation-shielding cylinder 15 of suitable metal such as lead or the like. This cylinder 15 is comparatively light in weight, weighing approximately a few ounces, and because of such small weight, the entire cylinder 13 with the tube 10 and cylinder 15 disposed therein may be mounted in a comparatively small instrument which may be conveniently held in one hand, thereby greatly facilitating the ease with which the instrument may be used. Thus, in the embodiment illustrated, the cylinder 13 has a portion of it disposed within a hollow tube 16, which, in turn, is supported in a holder 17, which holder has formed integral therewith a depending extension 18, so shaped as to be adapted for gripping in the hand of the operator.

The holder 18 is hollow and is adapted for receiving therein an extension 19 of the tube 10, within which extension is disposed a conductor 20, one end of which is connected to the cathode 11, as shown at 21, and the other end of which is connected, as shown at 22, to a conductor 23 leading to a high voltage plug (not shown). The filament 12 is connected, as shown at 24, to a conductor 25, which leads to a condenser 26, and the other end of said condenser being connected by means of the conductor 27 to a phone tip plug 28. The filament 12 is also connected, as shown at 24, to a conductor 29, which leads to a resistor 30, said resistor being connected by means of a conductor 31 to the other phone tip plug 32, and from there to the plus of the ground 33.

I have found from actual practice that the voltage pulse across the tube at time of discharge is sufficient to actuate a volt sensitive (piezo-electric) phone set in direct coupling, as set forth in Fig. 2, without the aid of an intervening amplifier arrangement.

In the electrical wiring diagram, shown in Fig. 3, the current pulse through the tube circuit is sufficient to actuate current sensitive (magnetic) head phones without the aid of an intervening amplification arrangement. Thus, it will be noted, that with my arrangement, it is possible to use a direct phone coupling circuit for a counter tube, thereby greatly simplifying the circuit by eliminating therefrom the amplifier means heretofore thought necessary with a tube of the Geiger-Muller type.

In operation, when the cathode cylinder 10 intercepts ionizing radiations, the counter tube mechanism when arranged in the electrical circuit hereinbefore described produces sharp, discreet electrical pulses in the phone system, which then announces them as sharp clicks to the ear of the observer. The time rate of arrival of these pulses is a measure of the intensity of the penetrating radiation intercepted by the sensitive volume (volume within the cathode cylinder) of tne counter tube.

Detection of a small radiating source is accomplished by noting an increased rate of the

signal pulses (over the background level—which is due to the natural radio-activity of all materials and due to cosmic rays). As the observer approaches the source with my improved apparatus, the rate becomes faster because the counter tube is intercepting more radiation from the source. Directional localization of a small radiating source is accomplished after the presence of the source has been detected. The apparatus is then turned in all directions until that direction is found at which the pulse rate is a minimum. When that occurs, the apparatus will be aiming directly at the radiation source with the radiation shielding end nearest the source.

If desired, electrostatic shielding may be provided for the holder unit, which may be done by plating the entire outside of the casing and then grounding the same to the left hand phone connection, which is the ground for my improved electric circuit.

From the above, it will be apparent that I have provided a novel and improved apparatus, including a counter tube, so arranged and proportioned, as to render the same more effective for locating a small source of penetrating radiation. It will also be noted that the device may be assembled in a small and compact unit, easily and conveniently handled by the observer. It will also be noted that I have provided a novel phone coupling circuit directly connected with the counter tube, thereby eliminating the necessity of intervening amplification means between the tube and the phone, all of which makes for a more simplified and cheaper construction, while, at the same time, being highly efficient for carrying out the purposes for which my improved apparatus is designed.

It is believed that my invention, its mode of construction and assembly, and many of its advantages should be readily understood from the foregoing without further description, and it should also be manifest that while a preferred embodiment of the invention has been shown and described for illustrative purposes, the structural details are nevertheless capable of wide variation within the purview of my invention as defined in the appended claims.

I claim:

1. An apparatus of the character described, comprising a holder, a counter tube mounted within said holder and radiation excluding shielding carried by said holder and disposed adjacent one end of said tube only so as to exclude only radiations coming in along the direction of the longitudinal axis of said tube.

2. An apparatus of the character described, comprising a holder, a counter tube mounted within said holder and having cathode and anode leads at one end of said tube, and an axially mounted radiation stopping shield disposed adjacent the other end of said tube, said radiation stopping shield having substantially no portion thereof in the path of radiations striking the sides of said tube, said arrangement serving to exclude from said tube only radiations coming in from the direction defined by said shield.

3. An apparatus of the character described for detecting a small source of radiation, comprising a holder adapted to be held in the hand of the observer, a counter tube mounted within said holder, and a radiation stopping shield disposed within said holder and arranged axially adjacent the operating end of said counter tube, said radiation stopping shield having substantially no portion thereof rearward of the operating end of said counter tube, whereby only radiations coming in from the direction defined by the shield and the longitudinal axis of said counter tube will be excluded.

4. An apparatus of the character described for detecting small sources of penetrating radiation comprising a holder adapted to be held in one hand by the observer to be aimed at the source of radiation, a hollow cylinder disposed within said holder, a counter tube supported within said cylinder, one end of said cylinder extending beyond one end of said counter tube, a radiation stopping shield mounted in said extended end of said cylinder and being effective for excluding only radiations coming in to said counter tube from the direction defined by said shield and the longitudinal axis of said counter tube, no portion of said shield extending substantially inward of said cylinder further than said end of said counter tube, and a downwardly extending grip formed with said holder for facilitating the direction of said apparatus.

5. An apparatus of the character described, comprising a holder provided with a substantially downwardly extending grip for facilitating the direction of said apparatus, a counter tube carried by said holder and disposed substantially at right angles to said grip, a radiation excluding shield disposed within said holder and arranged axially of said counter tube and in front of the forward end thereof with no portion of said shield extending substantially rearward of said front portion of said counter tube whereby only radiations coming in along the forward end of the longitudinal axis of said tube will be excluded from impinging on said tube.

6. An apparatus of the character described, comprising a holder provided with a hand grip and a portion extending forwardly and substantially at right angles to said grip, a counter tube mounted in said forwardly extending portion, and radiation excluding shielding provided for said tube and carried by said holder, said shielding being arranged in said holder at the forward end of said tube with no portion thereof extending substantially rearward of said tube so as to exclude from said tube only those radiations coming in along the line of the forward end of the longitudinal axis of said tube.

7. An apparatus of the character described for detecting small sources of penetrating radiation comprising a holder adapted to be held in one hand by the observer to be aimed at the source of radiation, a hollow cylinder disposed within said holder, a counter tube supported within said cylinder, one end of said cylinder extending beyond one end of said counter tube, and a radiation stopping shield mounted in said extended end of said cylinder and being effective for excluding only radiations coming in to said counter tube from the direction defined by said shield and the longitudinal axis of said counter tube, no portion of said shield extending substantially inward of said cylinder further than said end of said counter tube.

LEOPOLD ROVNER.