M. B. FRUMER.

DOOR LOCK TRAP BOTTLE HOLDER WITH A LETTER FLAP.

APPLICATION FILED JUNE 2, 1915.

1,179,818. Patented Apr. 18, 1916.

Fig. 1.

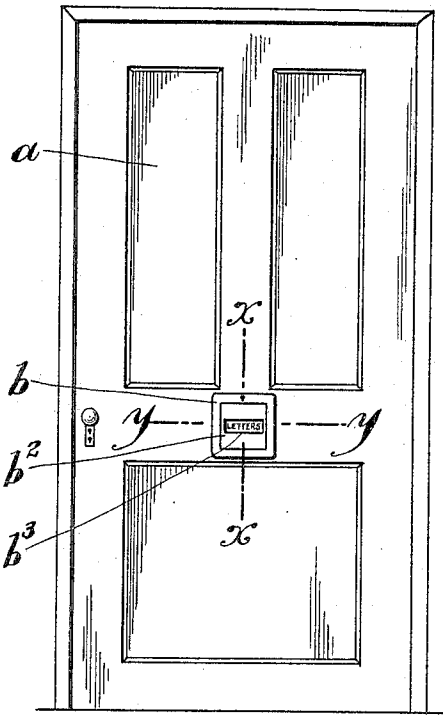

Fig. 2.

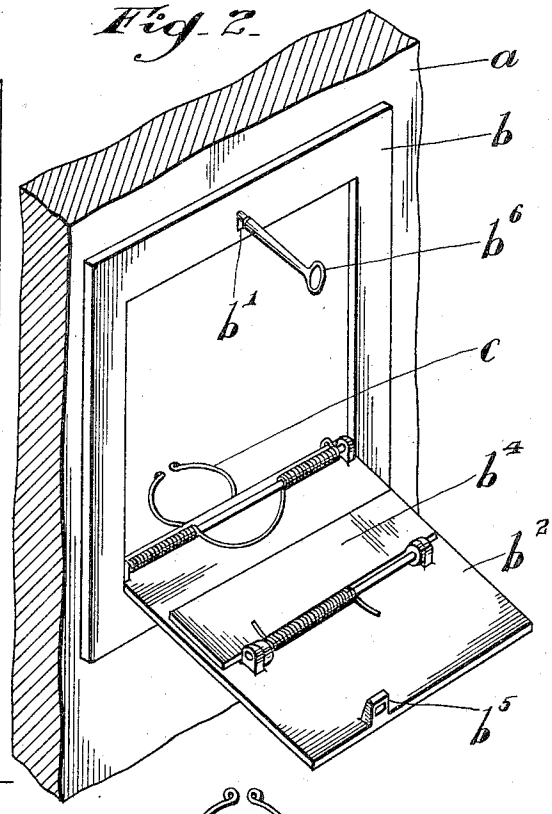

Fig. 3.

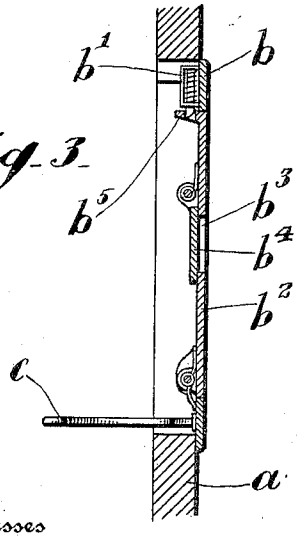

Fig. 4.

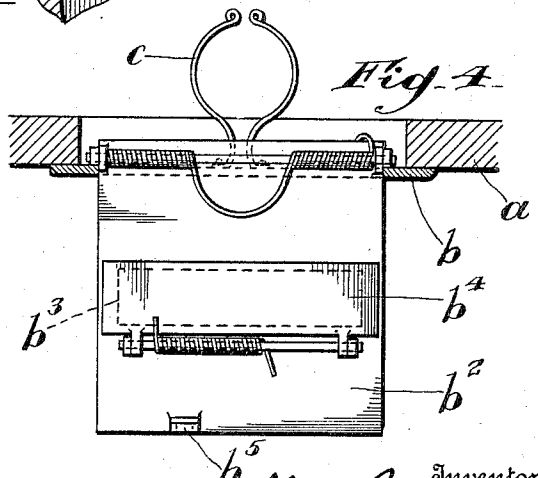

Witnesses

Thos. Rosemann.

Thomas M. Smith

Inventor

Moses B. Frumer,

By J. Walter Douglas,

Attorney

THE COLUMBIA PLANOGRAPH CO., WASHINGTON, D. C.

UNITED STATES PATENT OFFICE.

MOSES B. FRUMER, OF PHILADELPHIA, PENNSYLVANIA.

DOOR LOCK-TRAP BOTTLE-HOLDER WITH A LETTER-FLAP.

1,179,818. Specification of Letters Patent. Patented Apr. 18, 1916.

Application filed June 2, 1915. Serial No. 31,768.

To all whom it may concern:

Be it known that I, MOSES B. FRUMER, a subject of the Czar of Russia, but who has declared his intention of becoming a citizen of the United States, and now residing at the city of Philadelphia, in the county of Philadelphia and State of Pennsylvania, have invented certain new and useful Improvements in Door Lock-Trap Bottle-Holders with Letter-Flaps, of which the following is a specification.

My invention relates to a plate to be fitted into a door having a spring acting drop lock lid with a letter flap therein and with a holder for a bottle projecting from the rear of the plate surrounding the said drop-lid for mounting and supporting a bottle therein after the said lid has assumed a lowered position, which lid is then snapped into its normal vertical position against the surrounding plate or framing therefor so that only the letter flap is accessible for inserting letters of the like therethrough from the outside of the door until the drop-lid is unlocked for access to the bottle from without the door, to thereby provide a convenient and efficient means for safeguarding filled bottles deposited by a trades person against being purloined.

The nature and scope of my present invention will be more fully understood from the following description taken in connection with the accompanying drawings forming part hereof, in which—

Figure 1, is a front elevational view of a door, showing an appliance of my invention in application thereto. Fig. 2, is a perspective view, showing the drop-lid down, the said lid having a spring controlled letter flap provided therein. This view also shows the detail arrangement of the said appliance and a bottle holder extending from the rear of the plate or frame for the hinged drop-lid to support different size bottles therein. Fig. 3, is a vertical sectional view on the line x, x of Fig. 1; and Fig. 4, is a longitudinal sectional view on the line y, y of Fig. 1, with the drop-lid in an open position.

Referring to the drawings a, is the door into which is inserted and permanently secured a frame or plate b, provided with a lock b^1, and with a spring controlled hinged drop lid b^2, having a letter slit b^3 therein covered by a spring controlled flap b^4, as clearly illustrated in Figs. 2, 3 and 4. Projecting from the rear of the frame or plate b, is a clip-like holder c, as shown, for the receiving and holding of bottles of different sizes inserted therein. The drop-lid is provided with one member b^5, of the lock b^1, applied to the rear of the plate b, and adapted to be operated by a suitable key b^6, from the front of the said plate b, in position.

The main purpose of this invention is to provide a convenient and efficient means, whereby a trades person may insert a filled bottle of a lacteal fluid into a safe position behind a house door, without interfering with the inserting of a letter or the like by a carrier, through the door and at the same time providing a device of the character explained which is not unsightly or inconveniently located for the defined purpose.

Having thus described the nature and objects of my said invention, what I claim as new and desire to secure by Letters Patent is:—

A door lock trap bottle holder, in combination, including the door, whereof is inserted and permanently secured a plate b, having locking means, and a spring controlled hinged drop-lid provided with a letter slit capped with a spring controlled flap b^4, a clip-like holder horizontally positioned and projecting from the rear of said plate to receive bottles of different sizes dropped into the same, said lid provided with one member of the lock applied to the rear of said plate and operated from the front of the same.

In witness whereof, I have hereunto set my signature in the presence of the two subscribing witnesses.

MOSES B. FRUMER.

Witnesses:
HARRY N. BRENNER,
M. B. BRENNER.

Copies of this patent may be obtained for five cents each, by addressing the "Commissioner of Patents, Washington, D. C."