May 2, 1939. I. R. LATTA 2,156,995

RECEPTACLE FOR SWITCHBOARD INDICATING LAMPS

Filed March 5, 1938

Fig. 1.

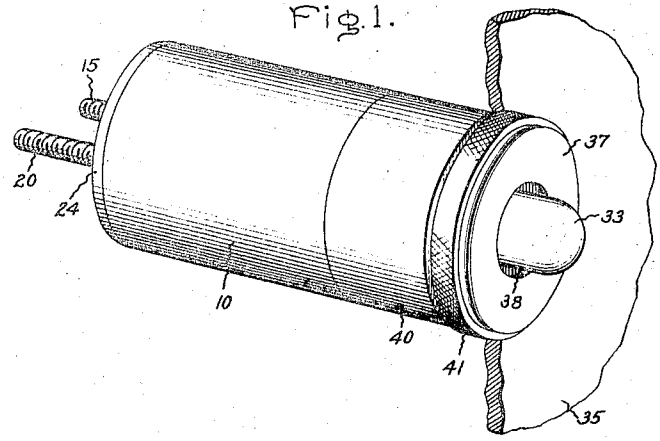

Fig. 2.

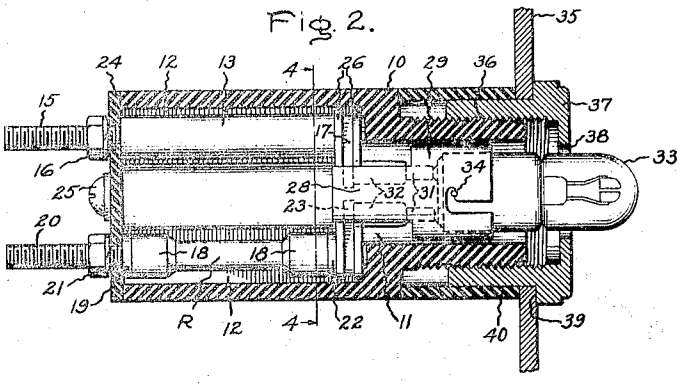

Fig. 3.

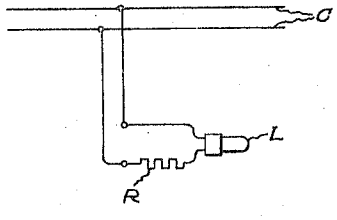

Fig. 4.

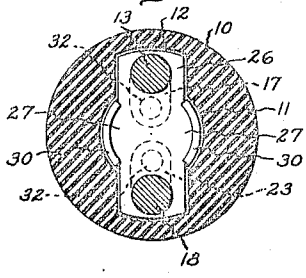

Inventor:
Isaac R. Latta,
by Harry E. Dunham
His Attorney.

Patented May 2, 1939 2,156,995

UNITED STATES PATENT OFFICE

2,156,995

RECEPTACLE FOR SWITCHBOARD INDICATING LAMPS

Isaac R. Latta, Drexel Hill, Pa., assignor to General Electric Company, a corporation of New York

Application March 5, 1938, Serial No. 194,183

8 Claims. (Cl. 177—329)

The present invention relates to switchboard lamps, and more particularly to receptacles for pilot lamps used for indicating energized circuits.

It is customary to indicate the energization of certain circuits on a switchboard by means of pilot lamps which are visible from the front of the switchboard while the circuit conductors are concealed behind the board. The pilot lamps may be of low voltage and may be connected across the energized circuits in series with a resistor which limits the electrical energy reaching the lamp.

An object of my invention is to provide a receptacle for such an associated resistor element and pilot lamp, which is of simple and inexpensive construction, and which may be assembled upon a switchboard without necessitating the use of screws and like fastening means.

Another object of my invention is the provision of a switchboard lamp receptacle for totally enclosing the resistor element and lamp socket, and which is capable of being mounted upon a switchboard in such a manner that the pilot lamp is visible from any point in front of the switchboard.

In the accompanying drawing Fig. 1 is a perspective view of the device mounted upon a switchboard; Fig. 2 is a sectional view through the casing showing the elements of the indicating lamp; Fig. 3 is a diagrammatic view showing the indicating lamp connected to an energized circuit, and Fig. 4 is a section through the lamp along the line 4—4 of Fig. 2.

Referring to the drawing, the pilot lamp L and resistor R are shown in diagrammatic form by Fig. 3 as connected in series across line conductors C, the energization of which is to be indicated upon the switchboard. It will be apparent that the lamp L will be lighted whenever the conductors C are energized. The lamp L is visible from the front of a switchboard while the conductors C are concealed in the rear of the switchboard thereby giving the panel a neat and pleasing appearance and at the same time protecting the wires from damage.

The receptacle for the lamp and resistor is shown more particularly in Fig. 2 and comprises a housing 10 formed of insulating material which is axially bored to form a cylindrical chamber 11 extending from the front to the rear of the housing. The rear portion of the housing is provided with diametrically opposed recesses 12 which are offset from the chamber 11 and which are adapted to house the terminal rod structures for the socket of the indicating lamp. In the upper recess 12 the terminal rod comprises a metal stud 13 while in the corresponding lower recess the terminal rod includes the resistor element R. In some cases it may be desirable to employ an additional resistor to be included in the stud 13.

The stud 13 is provided with a threaded terminal end 15 provided with a lock nut 16 for connection to one of the electrical conductors C. The other end of the stud is provided with a projecting arm 17 which projects inwardly toward the center of the chamber 11. The resistor element R is provided with supports 18 at each end. The support 18 at the rear of the resistor is connected to a terminal stud 19 having a threaded end 20 provided with a lock nut 21 for connection to the other of the electrical conductors C. The other support 18 is connected to a stud 22 provided with an arm 23 which extends toward the center of the chamber 11 in position opposite the arm 17. The threaded terminals of the studs 13 and 19 are held in position by means of a closure plate 24 which completely encloses the rear portion of the casing sealing all the elements within the casing with the exception of the threaded terminals which project through openings in the plate. Tap screws 25 secure the plate to the housing 10.

On opposite sides of the arms 17 and 23 are placed flat insulating members 26 which may be formed of fiber, or the like, and which hold the studs rigidly in alignment as a unit. Midway between the studs the insulating members are formed with semi-circular projections 27 which engage arms 28 extending from a lamp socket 29. The arms 28 are bent over at their ends, as shown at 30, to securely grip the insulating members and hold the socket shell 29 rigidly in position within the confines of the chamber 11. Cooperating with the socket shell are the contact elements 31 which are slidable in the cylinders 32 mounted upon the arms 17 and 23. The contacts 31 are maintained in extended position to engage the prongs of a lamp by means of springs (not shown) placed within the cylinders 32. An indicating lamp 33 is inserted into the socket shell through the chamber 11 and is secured to the socket by means of the customary bayonet joint indicated at 34. The lamp extends beyond the confines of the housing in position to be viewed at any angle.

In order to mount the receptacle upon a switchboard 35 the housing is provided with a reduced neck portion 36 which is externally threaded to cooperate with the internal threads formed on an escutcheon plate 37 which may be formed of metal. The escutcheon is provided with an opening 38 in alignment with chamber 11 through which the lamp 33 passes as the escutcheon is threaded upon the neck portion of the housing. Moreover, the aligned openings in the escutcheon and housing permit ready insertion of replacement lamps in the socket. Cooperating with a shoulder 39 formed on the escutcheon is a collar 40 of insulating material, which overlies the reduced neck portion of the housing and which cooperates with the shoulder to grip the switchboard

as the escutcheon is threaded down upon the housing. The collar 40 may be made of various widths depending upon the thickness of the switchboard. The escutcheon is knurled, as shown at 41, to facilitate mounting.

In order to distinguish between the various energized circuits, the escutcheon 37 may be painted various colors such as green, blue, red, amber or white depending upon the particular circuit to which the lamp structure is connected. Alternatively, the escutcheon may be formed of a colored plastic material. By providing a colored escutcheon it is unnecessary to employ a colored lens to cover the indicating lamp and hence a lamp of much lower wattage than is customary may be employed. The lamp 33 may be a neon or argon glow lamp of the order of one-quarter watt. In cases where the escutcheon is colored blue, an argon lamp is usually used, whereas, in cases where the escutcheon is green, red, amber or white a neon glow lamp is usually best suited.

It will be apparent that a completely enclosed receptacle is provided for the pilot lamp which may be mounted as a unit in the rear of the switchboard with the lamp projecting through the board to be visible from the front of the switchboard. The insulating members 26 and cover plate 24 hold the terminal studs and resistor rigidly in position within the housing as well as providing a firm mounting for the lamp. The resistor R is given various values depending upon the voltage across the conductors with which the indicating lamp is connected. For the lamps generally used, it has been found that resistance values of 126,000 ohms, 50,000 ohms, and 25,000 ohms are satisfactory for current potentials of 440 volts, 220 volts, and 115 volts, respectively. In cases where the lamp is used in circuits of its rated voltage no resistance is necessary and the resistance R is replaced by a stud, such as the stud 13.

By placing the resistor and lamp socket within the receptacle housing, a unitary structure is provided which completely encloses these elements and prevents them from becoming damaged such as would be the case if they were exposed outside the housing. The receptacle is easily and quickly mounted through a single opening in a switchboard and the appropriately colored escutcheon is screwed on to fasten the receptacle in place.

What I claim as new and desire to secure by Letters Patent of the United States is:

1. In a lamp receptacle, a housing having a chamber extending axially thereof, said chamber being provided with opposed recesses at one end thereof, a lamp socket having contact elements disposed in said chamber, a terminal stud in one of said recesses connected to one of said contacts, a resistor element in the other of said recesses connected to the other of said contacts, and means to mount said housing on a panel, said means being provided with an opening in alignment with said chamber whereby a lamp may be inserted through said opening into engagement with said socket.

2. In an indicating lamp receptacle, a housing provided with a chamber having opposite recesses at one end, a lamp socket having contact elements, a terminal rod in one of said recesses connected to one of said contacts, a resistor element in the other of said recesses connected to the other of said contacts, and an escutcheon plate for mounting said housing on a panel.

3. In a device of the class described, a plurality of terminal rods adapted to be connected to an electrical circuit, one of said rods including a resistor element, arms projecting from each of said rods toward each other, flat insulating members disposed on opposite sides of said arms and uniting said rods, contact elements projecting from said arms, and a shell having projections secured to said insulating members and cooperating with said contact elements to form a socket for an indicating lamp.

4. In a device of the class described, a plurality of terminal rods adapted to be connected to electrical conductors, one of said rods including a resistance element, an arm extending from each rod, flat insulating members disposed on opposite sides of said arms and connected to said rods, a contact element projecting from each arm, a shell mounted on said insulating members and cooperating with said contact elements to form a lamp socket, a housing enclosing said socket and resistor element, and means to mount said housing on a panel.

5. In a device of the character described, a housing having a reduced neck portion, a lamp socket within said housing, terminal rods connected to said socket and projecting from the confines of said housing for connection to electrical conductors, one of said terminal rods including a resistor within said housing connected in series with said socket, a collar overlying said neck portion, and an escutcheon plate mounted on said neck portion and cooperating with said collar to mount the housing upon a panel, said housing completely enclosing said socket and resistor element.

6. In a device of the class described, a housing having a chamber therein, said chamber being provided with opposed recesses at one end thereof, a terminal rod disposed in one of said recesses, a terminal rod including a resistor element disposed in the other of said recesses, an arm extending from each rod into the chamber, a flat insulating member connecting said rods, a contact element extending from each arm, a shell disposed in said chamber and mounted on said insulating member, said shell cooperating with said contact elements to form a lamp socket, and means for mounting said housing on a panel.

7. In an indicating lamp receptacle, a housing having a chamber therein provided with opposed recesses at one end, a terminal rod in one of said recesses, a terminal rod including a resistor element in the other of said recesses, an arm extending from each rod into the chamber, a flat insulating member connecting said terminal rods, a contact element extending from each arm, a shell in said chamber mounted on said member and cooperating with said contact elements to form a lamp socket, and an escutcheon for mounting said housing on a support, said escutcheon being provided with an opening in alignment with said chamber whereby a lamp may be inserted in said socket.

8. In a device of the class described, a plurality of terminal rods adapted to be connected to an electrical circuit, arms projecting from each of said rods toward each other, flat insulating members disposed on opposite sides of said arms and uniting said rods, contact elements projecting from said arms, and a shell having projections secured to said members and cooperating with said contact elements to form a socket for an indicating lamp.

ISAAC R. LATTA.