(12) INTERNATIONAL APPLICATION PUBLISHED UNDER THE PATENT COOPERATION TREATY (PCT)

(19) World Intellectual Property Organization
International Bureau

(43) International Publication Date
11 June 2015 (11.06.2015)

WIPO | PCT

(10) International Publication Number
WO 2015/084088 A1

(51) International Patent Classification:
C09K 11/06 (2006.01) *H05B 33/10* (2006.01)

(21) International Application Number:
PCT/KR2014/011886

(22) International Filing Date:
5 December 2014 (05.12.2014)

(25) Filing Language: English

(26) Publication Language: English

(30) Priority Data:
10-2013-0150919 5 December 2013 (05.12.2013) KR

(71) Applicant: **ROHM AND HAAS ELECTRONIC MATERIALS KOREA LTD.** [KR/KR]; 56, 3gongdan 1-ro, Seobuk-gu, Cheonan-si, Chungcheongnam-do 331-980 (KR).

(72) Inventors: **JEONG, Jong-Won**; 304-911, 13, Bongmyeong 8-gil, Dongnam-gu, Cheonan-si, Chungcheongnam-do 330-930 (KR). **KIM, See-Yong**; 107-1502, 152-9, Handeul 1-ro, Seobuk-gu, Cheonan-si, Chungcheongnam-do 331-220 (KR). **KIM, Dae-Hoon**; 1403-1001, 60, Heungdeok 3-ro, Giheung-gu, Yongin-si, Gyeonggi-do 446-994 (KR). **PARK, Jung-Hwan**; A-101, Yangji 2-gil, Bongmyeong-dong, Dongnam-gu, Cheonan-si, Chungcheongnam-do 330-931 (KR).

(74) Agent: **CHANG, Hoon**; Central Intellectual Property & Law, Korean Re Bldg. 5F, 68, Jong-ro 5-gil, Jongno-gu, Seoul 110-733 (KR).

(81) Designated States *(unless otherwise indicated, for every kind of national protection available)*: AE, AG, AL, AM, AO, AT, AU, AZ, BA, BB, BG, BH, BN, BR, BW, BY, BZ, CA, CH, CL, CN, CO, CR, CU, CZ, DE, DK, DM, DO, DZ, EC, EE, EG, ES, FI, GB, GD, GE, GH, GM, GT, HN, HR, HU, ID, IL, IN, IR, IS, JP, KE, KG, KN, KP, KZ, LA, LC, LK, LR, LS, LU, LY, MA, MD, ME, MG, MK, MN, MW, MX, MY, MZ, NA, NG, NI, NO, NZ, OM, PA, PE, PG, PH, PL, PT, QA, RO, RS, RU, RW, SA, SC, SD, SE, SG, SK, SL, SM, ST, SV, SY, TH, TJ, TM, TN, TR, TT, TZ, UA, UG, US, UZ, VC, VN, ZA, ZM, ZW.

(84) Designated States *(unless otherwise indicated, for every kind of regional protection available)*: ARIPO (BW, GH, GM, KE, LR, LS, MW, MZ, NA, RW, SD, SL, ST, SZ, TZ, UG, ZM, ZW), Eurasian (AM, AZ, BY, KG, KZ, RU, TJ, TM), European (AL, AT, BE, BG, CH, CY, CZ, DE, DK, EE, ES, FI, FR, GB, GR, HR, HU, IE, IS, IT, LT, LU, LV, MC, MK, MT, NL, NO, PL, PT, RO, RS, SE, SI, SK, SM, TR), OAPI (BF, BJ, CF, CG, CI, CM, GA, GN, GQ, GW, KM, ML, MR, NE, SN, TD, TG).

Published:

— *with international search report (Art. 21(3))*

(54) **Title**: AN APPARATUS FOR PURIFYING ORGANIC ELECTROLUMINESCENCE MATERIALS AND A METHOD THEREFOR

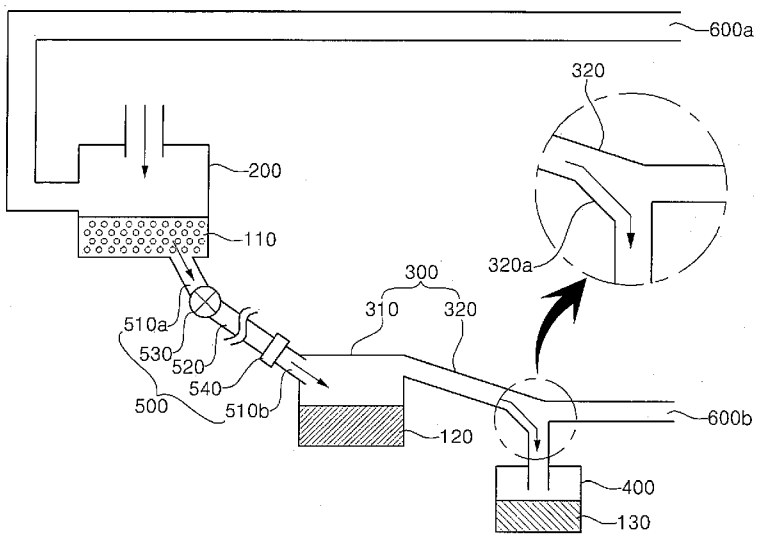

(57) **Abstract**: The present invention aims to purify organic electroluminescence materials in liquid state. Further, the present invention aims to perform the purification of organic electroluminescence materials in a simultaneous and parallel fashion.

WO 2015/084088 A1

Description

Title of Invention: AN APPARATUS FOR PURIFYING ORGANIC ELECTROLUMINESCENCE MATERIALS AND A METHOD THEREFOR

Technical Field

[1] The present invention relates to an apparatus and a method for purifying a liquid-state organic material for forming an organic light-emitting material.

Background Art

[2] Typically, materials used for an organic light-emitting diode (OLED) require purification. Purifying technology of the OLED materials is intended to extract only pure components required for electroluminescence from composite materials and to use the extracted components for thin film deposition. As the purifying technology of the OLED materials is improved, color purity and luminous efficiency are improved and the luminous lifetime of the OLED is increased. For the purpose of mass production of the OLED materials, the purifying technology for the OLED materials, which reduces the process time and improves purification efficiency, is essential.

[3] A sublimation purification method of an organic material is disclosed in a thesis by H. J. Wagner. et al., Journal of Materials Science, 17, 2781, (1982). In this thesis, a glass tube with a length of approximately 1 meter is inserted into a copper tube for thermal conduction, and a source material to be purified to produce the OLED material is disposed within a region of one end of the glass tube. A heater surrounds the copper tube containing the source material, and an interior of the glass tube maintains a vacuum state. The heater heats the source material within the glass tube, and thereby the source material is sublimated. The glass tube is made to be a temperature gradient, and thereby the sublimated material is cooled and re-crystallized at the other end of the glass tube. Thereby, re-crystallized organic material is created within the region of the other end of the glass tube.

[4] FIG. 1 illustrates a sublimation purification apparatus 100 for organic material according to the prior art. In the general sublimation purification apparatus 100, an inner tube 10 for containing a source material and an inner tube 20 for collecting a purified material are used to produce the organic material used for the organic light emitting diode.

[5] There is an outer tube 30 as a chamber in which the sublimation purification process of the organic material is performed, and a heater 40 surrounds an outer surface of the outer tube 30. The outer tube 30 may be divided into a plurality of regions, in which each of the regions may be controlled at different temperatures by the heater 40.

[6] For the sublimation purification process of the organic material, the inner tube 10 for containing source material, which contains the source material 60, and the empty inner tube 20 for collecting purified material are provided into an inside of the outer tube 30, and the heater 40 heats the source material 60. When the source material 60 is heated above the sublimation point, the source material is sublimated and thus is in a gas state. In this case, when an area of the outer tube provided with the inner tube 20 for collecting a purified material is heated by heater 40 below a sublimation point of a material to be obtained in the sublimation purification process, the purified material in the gas state is re-crystallized and is thus formed in a sold state in a form to surround an inner surface of the inner tube 20 for collecting a purified material.

[7] A conventional sublimation purification apparatus is a batch type due to restrictions of the purification process. A source material that can be used once is loaded, and then the purified material is unloaded after the sublimation purification process. Thereby, the first process is completed. A sublimation purification apparatus and a sublimation purification method using the same are disclosed in Korean Laid-Open Publication No. 10-2010-0114342. However, the conventional sublimation purification apparatus and method as disclosed in such a document have a limitation in productivity and throughput, because the process is manually performed in turn.

[8] Also, in a conventional sublimation purification apparatus, during heating a solid state source material, there is a difficulty in process managing caused by the diversity of organic material.

Disclosure of Invention

Technical Problem

[9] The present invention was made in order to solve the above problems occurring in the conventional apparatus for sublimating and purifying organic materials, and an object of the present invention is to purify and process organic materials in a liquid state.

[10] Furthermore, an object of the present invention is to perform processes simultaneously and in parallel when purifying organic materials.

Solution to Problem

[11] According to an exemplary embodiment of the present invention, an apparatus for purifying organic electroluminescence materials comprises a loading chamber for heating raw material in solid state to liquid state, a purifying chamber for heating the raw material in liquid state to transform into gas state for purification, and a collecting chamber for storing the purified material in liquid state from the purifying chamber.

[12] Furthermore, according to another exemplary embodiment of the present invention, the purifying chamber comprises a first purifying chamber for heating the raw material

in liquid state for evaporation, and a second purifying chamber in which the evaporated raw material liquefies.

[13] Furthermore, according to another exemplary embodiment of the present invention, the loading chamber, the purifying chamber, and the collecting chamber are formed of ceramic.

[14] Furthermore, according to another exemplary embodiment of the present invention, the second purifying chamber has a slope on which the purified material in liquid state flows to the collecting chamber.

[15] Furthermore, according to another exemplary embodiment of the present invention, the purifying chamber further comprises a third purifying chamber formed vertically between the first purifying chamber and the purifying second chamber, and the evaporated raw material from the first purifying chamber rises in the third purifying chamber with impurities falling down in liquid state and enters the second purifying chamber from the third purifying chamber.

[16] Furthermore, according to another exemplary embodiment of the present invention, the apparatus further comprises a connector having the raw material in liquid state transfer in air-tightness between the loading chamber and the first purifying chamber, the connector comprises a first connecting portion in the middle and a second connecting portion at both ends, and the first connecting portion has flexibility and the second connecting portion secures air-tightness between the first connecting portion and the loading chamber, and between the first connecting portion and the first purifying chamber.

[17] Furthermore, according to another exemplary embodiment of the present invention, the connector further comprises a valve, the valve regulating transfer of the raw material in liquid state between the first connecting portion and the second connecting portion.

[18] Furthermore, according to another exemplary embodiment of the present invention, the connector further comprises a fitting, the fitting coupling the first connecting portion and the second connecting portion.

[19] Furthermore, according to another exemplary embodiment of the present invention, a method for purifying organic electroluminescence materials comprises heating raw material in solid state to liquid state, heating the raw material in liquid state to transform into gas state for purification, and storing the purified material in liquid state.

[20] Furthermore, according to another exemplary embodiment of the present invention, the purification comprises a first purification heating the raw material in liquid state for evaporation, and a second purification in which the evaporated raw material liquefies.

[21] Furthermore, according to another exemplary embodiment of the present invention,

the purification further comprises a third purification in which the evaporated raw material from the first purification rises along a passage formed vertically with impurities falling down in liquid state.

Advantageous Effects of Invention

[22] In the present invention, subjects to be processed can be automatically transferred between processes because purification and processing are performed using organic materials of a liquid state, compared to the conventional apparatus for sublimating and purifying organic materials. Furthermore, the productivity and yield of organic materials can be increased through a simultaneous and parallel process because processes can be separated and processed.

Brief Description of Drawings

[23] FIG. 1 is a diagram illustrating a conventional apparatus for sublimating and purifying organic materials.

[24] FIG. 2 is a diagram illustrating an apparatus for purifying organic electroluminescence materials in accordance with an embodiment of the present invention.

[25] FIG. 3 is a diagram illustrating an apparatus for purifying organic electroluminescence materials in accordance with another embodiment of the present invention.

[26] FIG. 4 is a block diagram illustrating a method for purifying organic electroluminescence materials in accordance with an embodiment of the present invention.

[27] FIG. 5 is a block diagram illustrating a method for purifying organic electroluminescence materials in accordance with another embodiment of the present invention.

Mode for the Invention

[28] <Apparatus for purifying organic electroluminescence materials>

[29] FIG. 2 is a diagram illustrating an apparatus for purifying organic electroluminescence materials in accordance with an embodiment of the present invention.

[30] As may be seen from FIG. 2, the apparatus for purifying organic electroluminescence in accordance with an embodiment of the present invention comprises a loading unit 200, a purification unit 300, a collection unit 400, a connection unit 500, and vacuum lines 600a, 600b.

[31] Raw materials 110 of a solid state are input to the loading unit 200 through an inlet formed at the top of the loading unit 200. The raw materials 110 of a solid state injected into the loading unit 200 are pre-heated and converted into a liquid state before they move to the purification unit 300. A heating band (not illustrated) surrounding the loading unit 200 may be used as means for the pre-heating. A temperature for the pre-heating may be the melting point or higher of purified materials comprised in the raw materials and the boiling point or lower thereof.

[32] The purification unit 300 comprises a first chamber 310 and a second chamber 320.

The raw materials 120 of a liquid state that have been pre-heated in the loading unit 200 are moved through the connection unit 500 and are stored in the lower part of the first chamber 310. The raw materials 120 of a liquid state stored in the lower part of the first chamber 310 are heated for evaporation. A temperature for such heating may be the evaporation point or higher of purified materials comprised in the raw materials and may be lower than the evaporation point of impurities comprised in the raw materials. A heating mantle (not illustrated) may be used as means for heating the first chamber 310. The configuration of the second chamber 320 is described later.

[33] In this case, the connection unit 500 allows the raw materials of a liquid state to be moved in an airtight state between the loading unit 200 and the first chamber 310. Furthermore, the connection unit may comprise a first connection unit 520 that has flexibility at the center of the connection unit and second connection units 510a, 510b that guarantee an airtight state between the first connection unit 520 and the loading unit 200 and between the first connection unit 520 and the first chamber 310 at both ends of the connection unit.

[34] The first connection unit 520 may be made of flexible materials so that it may withstand a high-temperature and decompression state because heating is performed in the loading unit 200 and the first chamber 310 and processes are also performed in a decompression state through the vacuum lines 600a, 600b. The first connection unit 520 may be configured to have a metal filament or mesh structure made of steel use stainless (SUS) so that it has both airtightness and flexibility.

[35] As will be described later, the loading unit 200 and the first chamber 310 may be made of ceramics, and the first connection unit 520 may be made of metal. Accordingly, the second connection units 510a, 510b are formed to guarantee airtightness when the raw materials of a liquid state pre-heated in the loading unit 200 move between the loading unit 200 and the first chamber 310 and the first connection unit 520 having different coefficients of thermal expansion. To this end, the second connection units 510a, 510b may comprise an O-ring.

[36] Furthermore, the connection unit 500 may comprise a valve 530 for controlling the movement of the raw materials of a liquid state between the loading unit 200 and the first chamber 310. In particular, the valve 530 may be formed between the second connection unit 510a and the first connection unit 520. Accordingly, organic materials can be formed in parallel and simultaneously because processes can be separated and performed.

[37] Furthermore, the connection unit 500 may comprise a fitting 540 between the second connection unit 510b and the first connection unit 520. The fitting 540 is formed to mechanically fasten the second connection unit 510b and the first connection unit 520.

[38] The second chamber 320 may be horizontally extended and formed between the first

chamber 310 and the collection unit 400. One side of the second chamber 320 is connected to the first chamber 310 so that the raw materials evaporated in the first chamber 310 are introduced into the second chamber 320. The other side of the second chamber 320 is formed so that purified materials 130 liquefied in the second chamber 320 are drained to the collection unit 400. A temperature within the second chamber 320 may maintain the freezing point or lower of the purified materials comprised in the raw materials. The second chamber 320 may be heated by heating means. A heating band (not illustrated) may be used as the heating means.

[39] In this case, the second chamber 320 may be formed to have an inclined plane 320a in which the purified materials of a liquid state are floated and guided to the collection unit 400. That is, if the purified materials of a liquid state liquefied in the second chamber 320 flow into and are collected by the collection unit 400, the purified materials can be easily collected by such an inclined plane structure and efficiently compared to a structure in which the second chamber is horizontally formed.

[40] The collection unit 400 is connected to the second chamber 320. The purified materials 130 of a liquid state purified in the second chamber 320 are stored in the collection unit 400.

[41] The aforementioned loading unit 200, purification unit 300, and collection unit 400 may be damaged if they are made of metal materials because organic materials are processed in a high-temperature and decompression state in each unit process. Accordingly, the loading unit 200, the purification unit 300, and the collection unit 400 may be made of ceramic materials so that they have low reactivity with organic materials.

[42] The loading unit 200, the purification unit 300, and the collection unit 400 may be connected to the vacuum lines 600a, 600b. Each process may be performed in a decompression state in order to prevent a phenomenon in which evaporated organic materials and oxygen are combusted through a reaction if the organic materials are heated in the atmosphere.

[43] FIG. 3 is a diagram illustrating an apparatus for purifying organic electroluminescence materials in accordance with another embodiment of the present invention.

[44] The apparatus for purifying organic electroluminescence materials in accordance with another embodiment of the present invention is similar to the apparatus for purifying organic electroluminescence materials in accordance with an embodiment of the present invention other than a third chamber 1330, and thus a description of the same elements is described in brief.

[45] As may be seen from FIG. 3, the apparatus for purifying organic electroluminescence materials in accordance with another embodiment of the present invention comprises a loading unit 1200, a purification unit 1300, a collection unit 1400, a connection unit

1500, and vacuum lines 1600a, 1600b.

[46] Raw materials 1110 of a solid state are input to the loading unit 1200 through an inlet formed at the top of the loading unit 1200. The raw materials 1110 of a solid state injected into the loading unit 1200 are pre-heated and converted into a liquid state before they move to the purification unit 1300.

[47] The purification unit 1300 comprises a first chamber 1310, a second chamber 1320, and a third chamber 1330. The raw materials 1120 of a liquid state pre-heated in the loading unit 1200 are stored in the lower part of the first chamber 1310 through the connection unit 1500. The raw materials 1120 of a liquid state stored in the lower part of the first chamber 1310 are heated for evaporation.

[48] The third chamber 1330 may be vertically extended and formed between the first chamber 1310 and the second chamber 1320. The raw materials heated and evaporated in the first chamber 1310 rise and pass through the third chamber 1330, and they are introduced into the second chamber 1320. Impurities that belong to the evaporated raw materials and that are other than purified materials are liquefied while passing through the third chamber 1330, and they drop in a liquid state. Accordingly, the purity of the purified materials can be further increased because the third chamber 1330 is used.

[49] In this case, the connection unit 1500 allows the raw materials of a liquid state to move between the loading unit 1200 and the first chamber 1310 in an airtight state. Furthermore, the connection unit may comprise a first connection unit 1520 that has flexibility at the center of the connection unit and second connection units 1510a, 1510b that guarantee an airtight state between the first connection unit 1520 and the loading unit 1200 and between the first connection unit 1520 and the first chamber 1310 at both ends of the connection unit.

[50] Furthermore, the connection unit 1500 may comprise a valve 1530 for controlling the movement of the raw materials of a liquid state between the loading unit 1200 and the first chamber 1310.

[51] Furthermore, the connection unit 1500 may comprise a fitting 1540 between the second connection unit 1510b and the first connection unit 1520.

[52] The second chamber 1320 may be horizontally extended and formed between the first chamber 1310 and the collection unit 1400.

[53] In this case, the second chamber 1320 may be formed to have an inclined plane 1320a in which the purified materials of a liquid state are floated and guided to the collection unit 1400.

[54] The collection unit 1400 is connected to the second chamber 1320. The purified materials 1130 of a liquid state liquefied in the second chamber 1320 are stored in the collection unit 1400.

[55] <A method for purifying organic electroluminescence materials>

[56] FIG. 4 is a block diagram illustrating a method for purifying organic electroluminescence materials in accordance with an embodiment of the present invention.

[57] As may be seen from FIG. 4, the method for purifying organic electroluminescence materials in accordance with an embodiment of the present invention comprises a converting step S100, a purification step S200, and a storage step S300. The purification step S200 comprises an evaporation step S210 and a liquefaction step S220.

[58] First, raw materials of a solid state are heated and converted into a liquid state (S100). Subjects to be processed can be automatically transferred between processes because purification and processing are performed using organic materials of a liquid state, compared to the conventional apparatus for sublimating and purifying organic materials. Furthermore, the productivity and yield of organic materials can be increased through a simultaneous and parallel process because processes can be separately processed.

[59] Next, the raw materials of a liquid state are heated, evaporated, and purified (S200). The purification step comprises the first purification step S210 of evaporating the raw materials of a liquid state by heating the raw materials of a liquid state and the second purification step S220 of liquefying the evaporated raw materials. In the first purification step S210, purified materials comprised in the raw materials of a liquid state may be evaporated, and impurities comprised in the raw materials of the liquid state may remain in the liquid state. In the second purification step S220, purified materials comprised in the evaporated raw materials may be liquefied, and impurities comprised in the evaporated raw materials may remain in a gaseous state. The impurities of the gaseous state may be discharged using the vacuum lines.

[60] Next, the purified materials of the liquid state are stored (S300). In accordance with the present invention, organic materials of the liquid state can be obtained compared to the conventional apparatus for sublimating and purifying organic materials, in which re-crystallized organic materials of the solid state are collected. Accordingly, further improved phase change efficiency can be obtained if organic electroluminescence light-emitting diodes are fabricated through a deposition process after the state of organic materials is converted into a gaseous state using purified organic materials.

[61] FIG. 5 is a block diagram illustrating a method for purifying organic electroluminescence materials in accordance with another embodiment of the present invention.

[62] The method for purifying organic electroluminescence materials in accordance with another embodiment of the present invention is similar to the method for purifying organic electroluminescence materials in accordance with an embodiment of the present invention other than the step S2200 of separating impurities, and thus the same steps are described in brief.

[63] As may be seen from FIG. 5, the method for purifying organic electroluminescence

materials in accordance with another embodiment of the present invention comprises a converting step S1000, a purification step S2000, and a storage step S3000. The purification step S2000 comprises an evaporation step S2100, the separation step S2200, and a liquefaction step S2300.

[64] First, raw materials of the solid state are heated and converted into the liquid state (S1000).

[65] Next, the raw materials of the liquid state are heated, evaporated, and purified (S2000). The purification step comprises the first purification step S2100 of evaporating the raw materials of a liquid state by heating the raw materials of a liquid state and the second purification step S2300 of liquefying the evaporated raw materials.

[66] In this case, the method for purifying organic electroluminescence materials in accordance with another embodiment of the present invention further comprises the third purification step S2200 of liquefying, dropping, and separating impurities comprised in the raw materials of the liquid state. The impurities that belong to the raw materials evaporated in the first purification step S2100 and that are other than purified materials are liquefied and dropped in a liquid state while rising along a passage that is vertically formed, thereby being capable of further increasing the purity of the purified materials.

[67] Next, the purified materials of a liquid state are stored (S3000).

[68] [Description of Reference Numerals]

[69] 110: Raw materials of the solid state

[70] 120: Raw materials of the liquid state

[71] 130: Purified materials of the liquid state

[72] 200: Loading unit

[73] 300: Purification unit

[74] 310: The first chamber

[75] 320: The second chamber

[76] 320a: Inclined plane

[77] 400: Collection unit

[78] 500: Connection unit

[79] 510a, 520a: Second connection units

[80] 520: The first connection unit

[81] 530: Valve

[82] 540: Fitting

[83] 600a, 600b: Vacuum lines

[84] 1110: Raw materials of the solid state

[85] 1120: Raw materials of the liquid state

[86] 1130: Purified materials of the liquid state

[87] 1200: Loading unit

[88] 1300: Purification unit

[89] 1310: The first chamber

[90] 1320: The second chamber

[91] 1320a: Inclined plane

[92] 1330: The third chamber

[93] 1400: Collection unit

[94] 1500: Connection unit

[95] 1510a, 1520a: Second connection units

[96] 1520: The first connection unit

[97] 1530: Valve

[98] 1540: Fitting

[99] 1600a, 1600b: Vacuum lines

Claims

[Claim 1] An apparatus for purifying organic electroluminescence materials, comprising:
a loading chamber for heating raw material in solid state to liquid state;
a purifying chamber for heating the raw material in liquid state to transform into gas state for purification; and
a collecting chamber for storing the purified material in liquid state from the purifying chamber.

[Claim 2] The apparatus of claim 1, wherein the purifying chamber comprising:
a first purifying chamber for heating the raw material in liquid state for evaporation; and
a second purifying chamber in which the evaporated raw material liquefies.

[Claim 3] The apparatus of claim 1, wherein the loading chamber, the purifying chamber, and the collecting chamber are formed of ceramic.

[Claim 4] The apparatus of claim 2, wherein the second purifying chamber has a slope on which the purified material in liquid state flows to the collecting chamber.

[Claim 5] The apparatus of claim 2, wherein the purifying chamber further comprising a third purifying chamber formed vertically between the first purifying chamber and the purifying second chamber, wherein the evaporated raw material from the first purifying chamber rises in the third purifying chamber with impurities falling down in liquid state and enters the second purifying chamber from the third purifying chamber.

[Claim 6] The apparatus of claim 2 further comprising a connector having the raw material in liquid state transfer in air-tightness between the loading chamber and the first purifying chamber, the connector comprising a first connecting portion in the middle and a second connecting portion at both ends, wherein the first connecting portion has flexibility and the second connecting portion secures air-tightness between the first connecting portion and the loading chamber, and between the first connecting portion and the first purifying chamber.

[Claim 7] The apparatus of claim 6, wherein the connector further comprising a valve, the valve regulating transfer of the raw material in liquid state between the first connecting portion and the second connecting portion.

[Claim 8] The apparatus of claim 6, wherein the connector further comprising a fitting, the fitting coupling the first connecting portion and the second

connecting portion.

[Claim 9] A method for purifying organic electroluminescence materials, comprising:
heating raw material in solid state to liquid state;
heating the raw material in liquid state to transform into gas state for purification; and
storing the purified material in liquid state.

[Claim 10] The method of claim 9, wherein the purification comprising:
a first purification heating the raw material in liquid state for evaporation; and
a second purification in which the evaporated raw material liquefies.

[Claim 11] The method of claim 10, wherein the purification further comprising a third purification in which the evaporated raw material from the first purification rises along a passage formed vertically with impurities falling down in liquid state.

[Fig. 1]

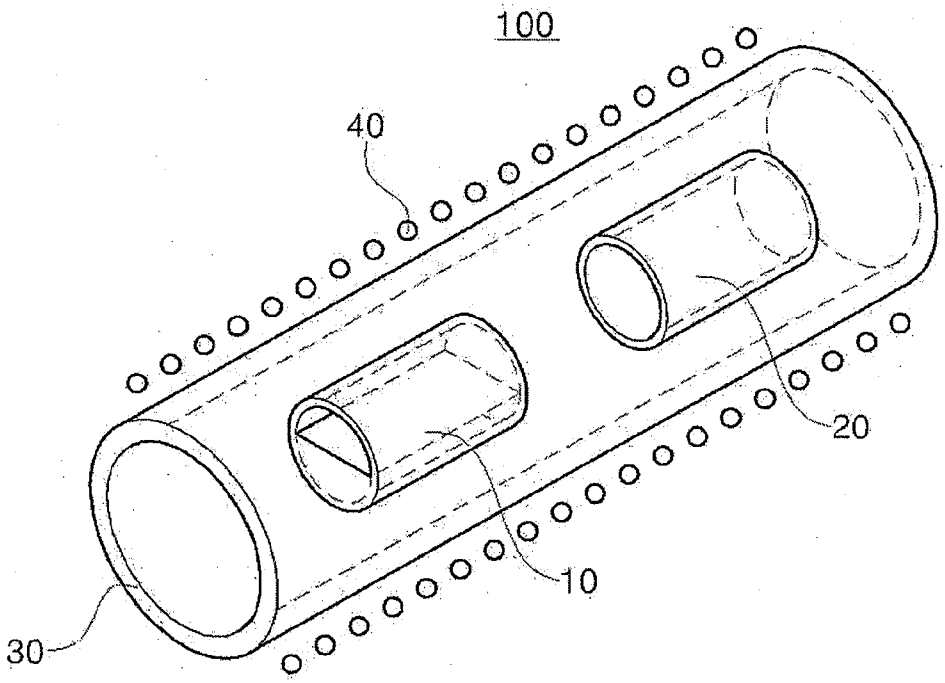
100
40
20
10
30

[Fig. 2]

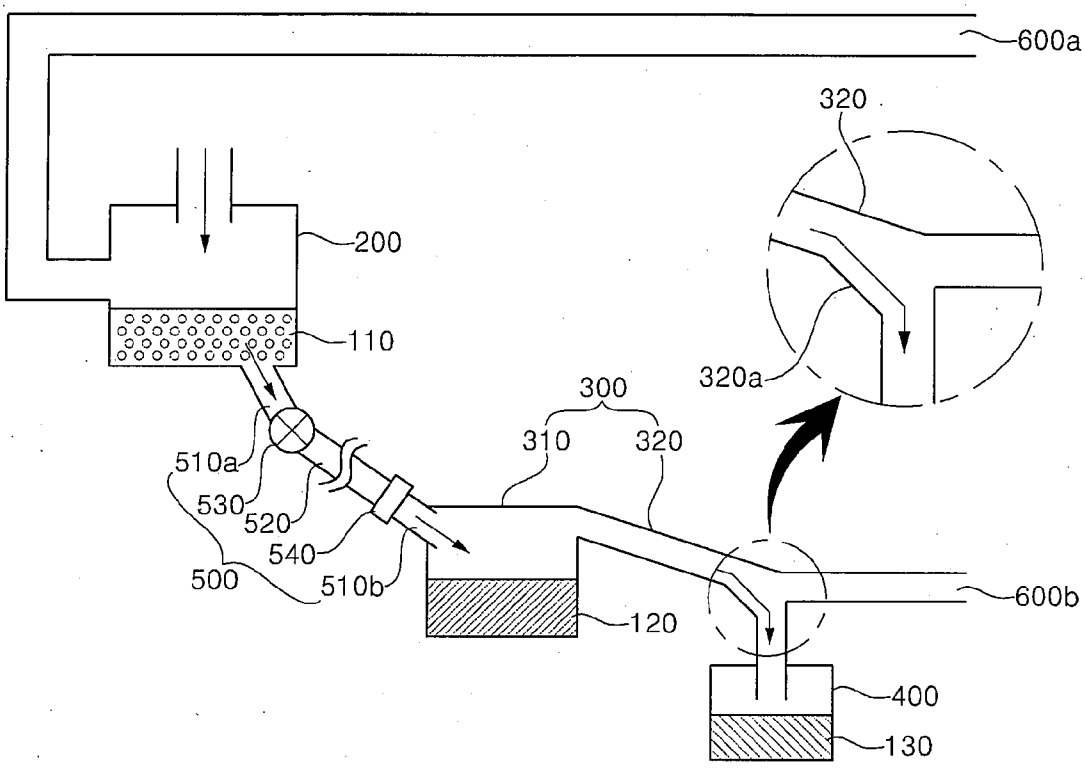
600a
320
200
110
320a
300
310
320
510a
530
520
540
500
510b
120
600b
400
130

[Fig. 3]

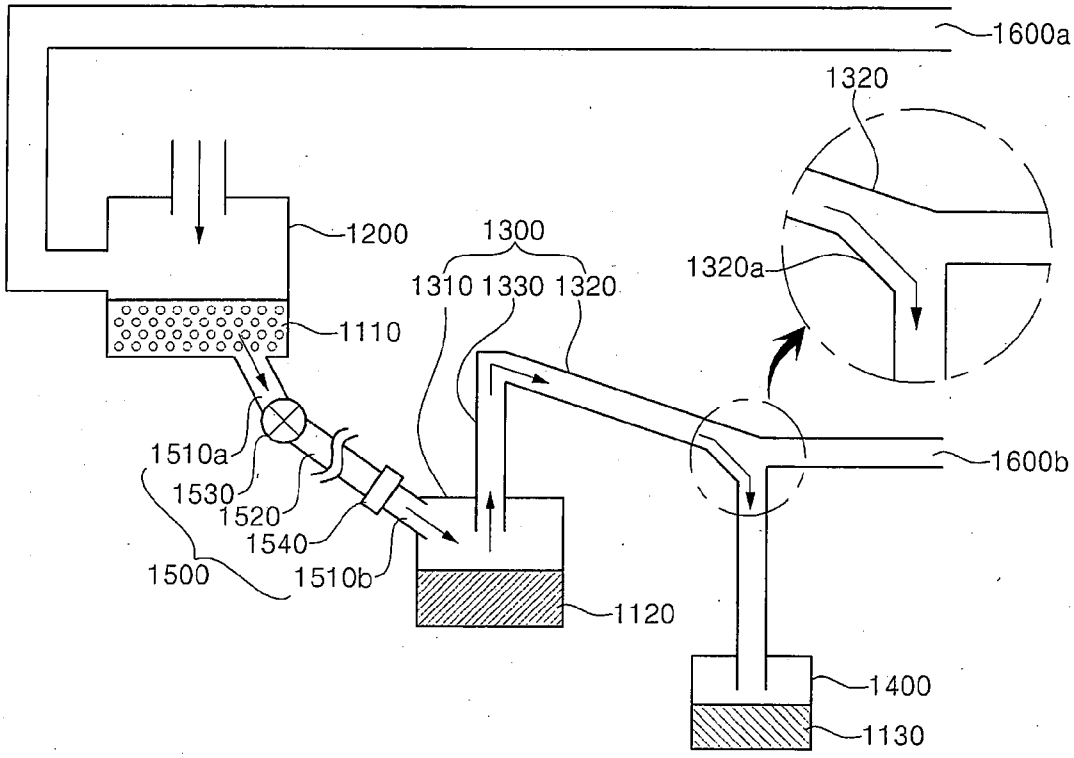
1600a
1320
1200
1300
1310 1330 1320
1320a
1110
1510a
1530
1520
1540
1500
1510b
1120
1600b
1400
1130

[Fig. 4]

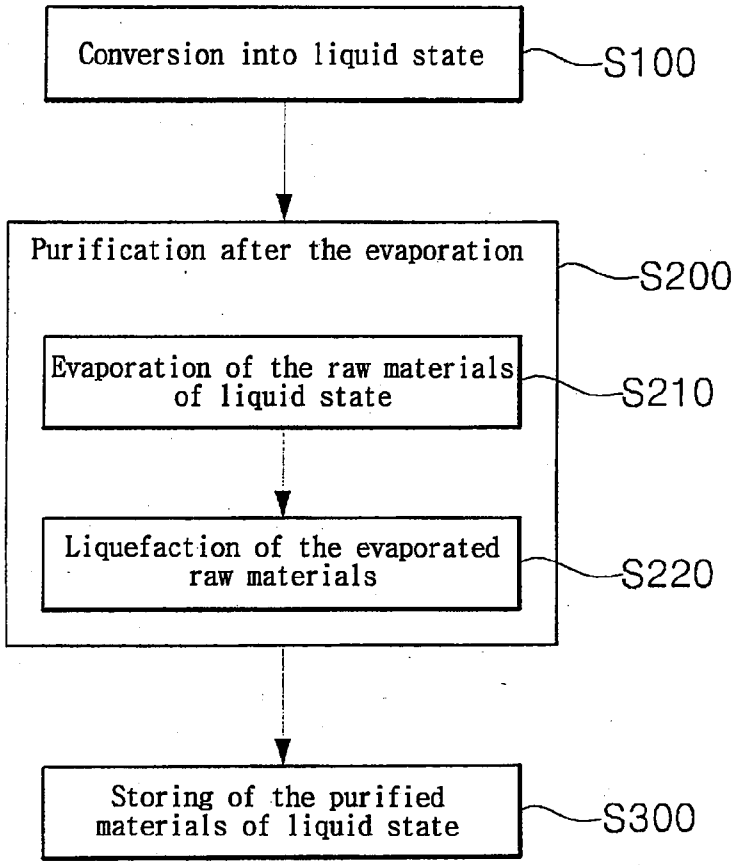
Conversion into liquid state
S100
Purification after the evaporation
S200
Evaporation of the raw materials of liquid state
S210
Liquefaction of the evaporated raw materials
S220
Storing of the purified materials of liquid state
S300

[Fig. 5]

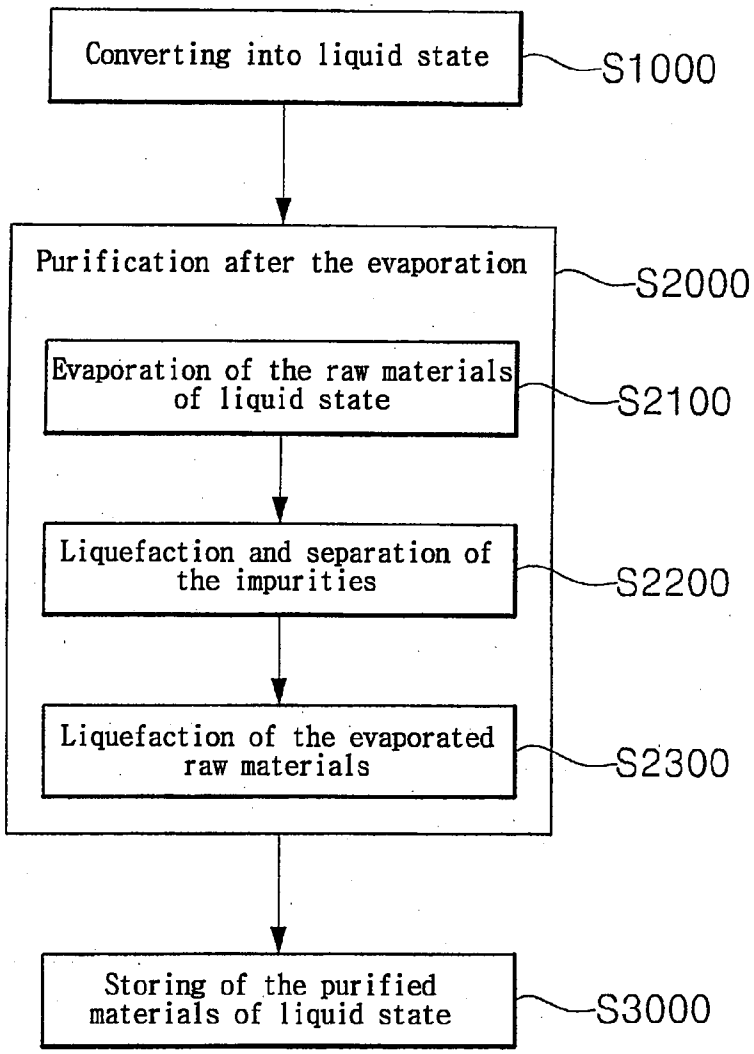
Converting into liquid state
S1000
Purification after the evaporation
S2000
Evaporation of the raw materials of liquid state
S2100
Liquefaction and separation of the impurities
S2200
Liquefaction of the evaporated raw materials
S2300
Storing of the purified materials of liquid state
S3000

INTERNATIONAL SEARCH REPORT

International application No.
PCT/KR2014/011886

A. CLASSIFICATION OF SUBJECT MATTER

C09K 11/06 (2006.01) H05B 33/10 (2006.01)

According to International Patent Classification (IPC) or to both national classification and IPC

B. FIELDS SEARCHED

Minimum documentation searched (classification system followed by classification symbols)

Documentation searched other than minimum documentation to the extent that such documents are included in the fields searched

Electronic data base consulted during the international search (name of data base and, where practicable, search terms used)

WPIAP, EPODOC: (C09K11/06/LOW/IC/CC, C09K11/01/IC/CC, H05B33/10/IC/CC,H01L51/50/IC/CC) AND KEYWORDS (SOLID, LIQUID AND GAS), (H05B33/10/IC/CC) AND KEYWORDS (SOLID, LIQUID, GAS, HEAT, EVAPORATION, COOL, CHAMBER AND SIMILAR WORDS), (B01D5/006/IC/CC) AND (SOLID, WAX, LUMINESCENCE, OLED). TXPEA, TXPEB, TXPEC, TXPEE, TXPEF, TXPEH, TXPEI, TXPEP, TXPEPEA, TXPES, TXPUSE0A, TXPUSE1A, TXPUSEA, TXPUSEB, TXPWOEA, EPODOC, WPIAP: KEYWORDS ONLY SEARCH: (ELECTROLUMINESCENCE, SOLID, LIQUID, GAS, COLLECTION, ORGANIC), (C09K11/06/LOW/IC/CC, C09K11/01/IC/CC) AND KEYWORDS (ELECTROLUMINESCENCE, ORGANIC, HEAT, SOLID, LIQUID, GAS, PURIFY AND SIMILAR WORDS. KEYWORDS SEARCH ONLY : ORGANIC, ELECTROLUMINESCENCE, SOLID, LIQUID, GAS, PURIFY, CHAMBER, IMPURITIES AND SIMILAR TERMS. ESPACENET SEARCH: KEYWORDS:PURIFY,ELECTROLUMINESCENCE, LIQUID, GAS, SOLID, HEAT, CHAMBER, COLLECT. GOOGLE AND AUSPAT SEARCH: KEYWORDS: PURIFYING, ORGANIC, ELECTROLUMINESCENCE, CHAMBER, HEAT, SOLID, LIQUID, GAS, COLLECT AND SIMILAR TERMS, KEYWORDS: APPLICANT/INVENTOR.

C. DOCUMENTS CONSIDERED TO BE RELEVANT

Category*	Citation of document, with indication, where appropriate, of the relevant passages	Relevant to claim No.
	Documents are listed in the continuation of Box C	

[X] Further documents are listed in the continuation of Box C [X] See patent family annex

* Special categories of cited documents:

"A" document defining the general state of the art which is not considered to be of particular relevance

"E" earlier application or patent but published on or after the international filing date

"L" document which may throw doubts on priority claim(s) or which is cited to establish the publication date of another citation or other special reason (as specified)

"O" document referring to an oral disclosure, use, exhibition or other means

"P" document published prior to the international filing date but later than the priority date claimed

"T" later document published after the international filing date or priority date and not in conflict with the application but cited to understand the principle or theory underlying the invention

"X" document of particular relevance; the claimed invention cannot be considered novel or cannot be considered to involve an inventive step when the document is taken alone

"Y" document of particular relevance; the claimed invention cannot be considered to involve an inventive step when the document is combined with one or more other such documents, such combination being obvious to a person skilled in the art

"&" document member of the same patent family

Date of the actual completion of the international search	Date of mailing of the international search report
17 March 2015	17 March 2015
Name and mailing address of the ISA/AU	**Authorised officer**
AUSTRALIAN PATENT OFFICE PO BOX 200, WODEN ACT 2606, AUSTRALIA Email address: pct@ipaustralia.gov.au	Ashish Tayshetye AUSTRALIAN PATENT OFFICE (ISO 9001 Quality Certified Service) Telephone No. 0262832535

INTERNATIONAL SEARCH REPORT C (Continuation). DOCUMENTS CONSIDERED TO BE RELEVANT		International application No. **PCT/KR2014/011886**
Category*	Citation of document, with indication, where appropriate, of the relevant passages	Relevant to claim No.
X	JP 2013-116879 A (IDEMITSU KOSAN CO LTD) 13 June 2013 Patent Abstract of Japan, Abstract, Description paragraph [0002], [0007], [0018]-[0021], [0024]-[00226], [0030]-[0033], [0039] -[0043], [0048] - [0053], [0074] - [0094], claims 1 -8, figures 1 - 10	1 - 11
A	WO 2003/080893 A1 (AIXTRON AG) 02 October 2003	
A	US 2010/0154712 A1 (TAMURA et al.) 24 June 2010	

INTERNATIONAL SEARCH REPORT Information on patent family members	International application No. **PCT/KR2014/011886**

This Annex lists known patent family members relating to the patent documents cited in the above-mentioned international search report. The Australian Patent Office is in no way liable for these particulars which are merely given for the purpose of information.

Patent Document/s Cited in Search Report		Patent Family Member/s	
Publication Number	**Publication Date**	**Publication Number**	**Publication Date**
JP 2013-116879 A	13 June 2013	JP 2013116464 A	13 Jun 2013
		KR 20140084165 A	04 Jul 2014
		KR 20140084166 A	04 Jul 2014
		TW 201323044 A	16 Jun 2013
		TW 201323045 A	16 Jun 2013
		WO 2013065626 A1	10 May 2013
		WO 2013065627 A1	10 May 2013
WO 2003/080893 A1	02 October 2003	WO 03080893 B1	18 Dec 2003
		AU 2003215669 A1	08 Oct 2003
		DE 10212923 A1	08 Jan 2004
		EP 1488023 A1	22 Dec 2004
		JP 2005520687 A	14 Jul 2005
		KR 20040104527 A	10 Dec 2004
		TW 200304959 A	16 Oct 2003
		US 2005109281 A1	26 May 2005
US 2010/0154712 A1	24 June 2010	JP 2010144221 A	01 Jul 2010
		KR 20100070993 A	28 Jun 2010

End of Annex

Due to data integration issues this family listing may not include 10 digit Australian applications filed since May 2001.