Oct. 23, 1956 E. J. LEONARD 2,768,240

CROSSBAR-SWITCH LINE-FINDER SYSTEM

Filed Nov. 12, 1954 3 Sheets-Sheet 1

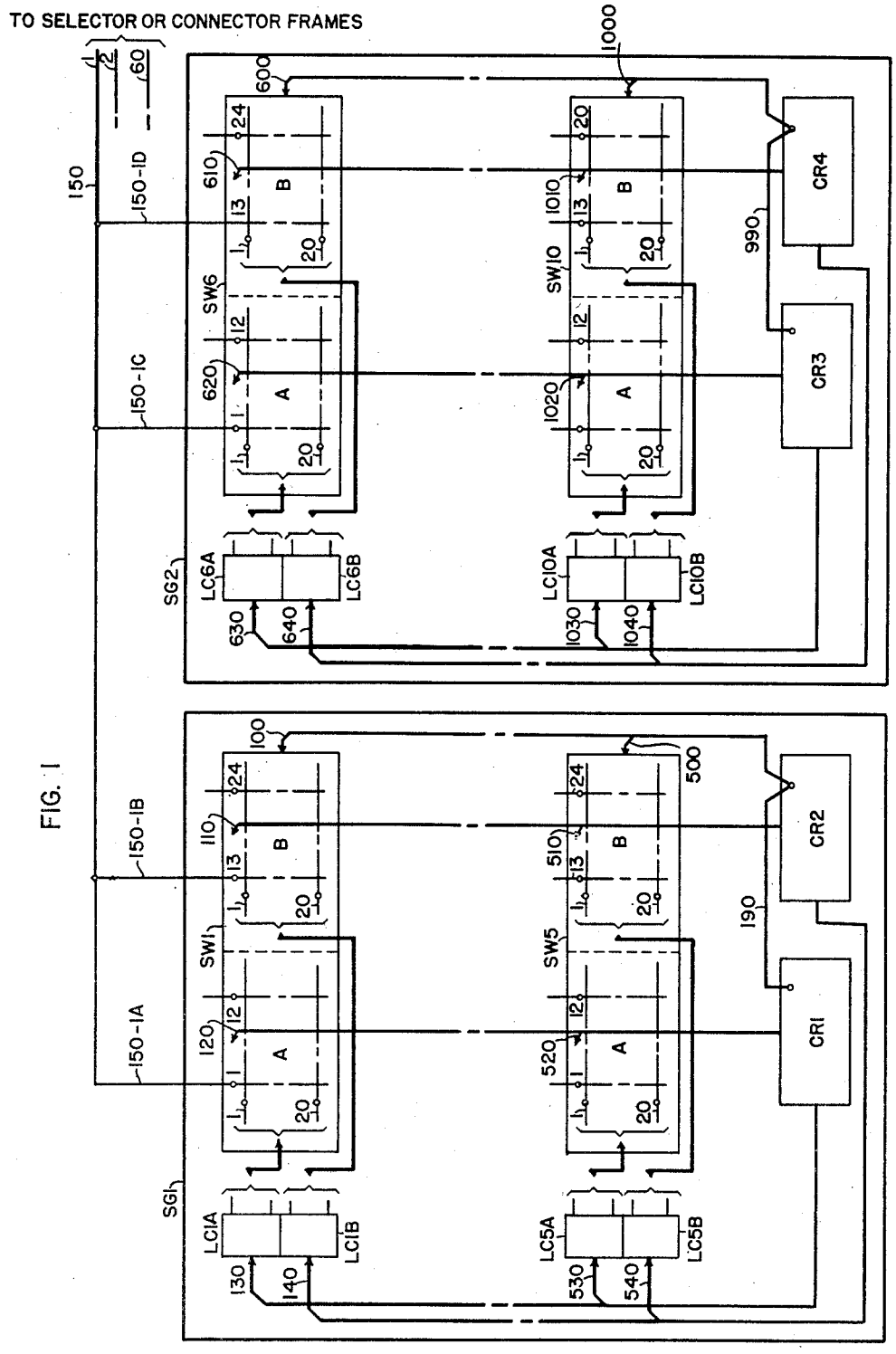

FIG. 1

Oct. 23, 1956 E. J. LEONARD 2,768,240

CROSSBAR-SWITCH LINE-FINDER SYSTEM

Filed Nov. 12, 1954 3 Sheets-Sheet 2

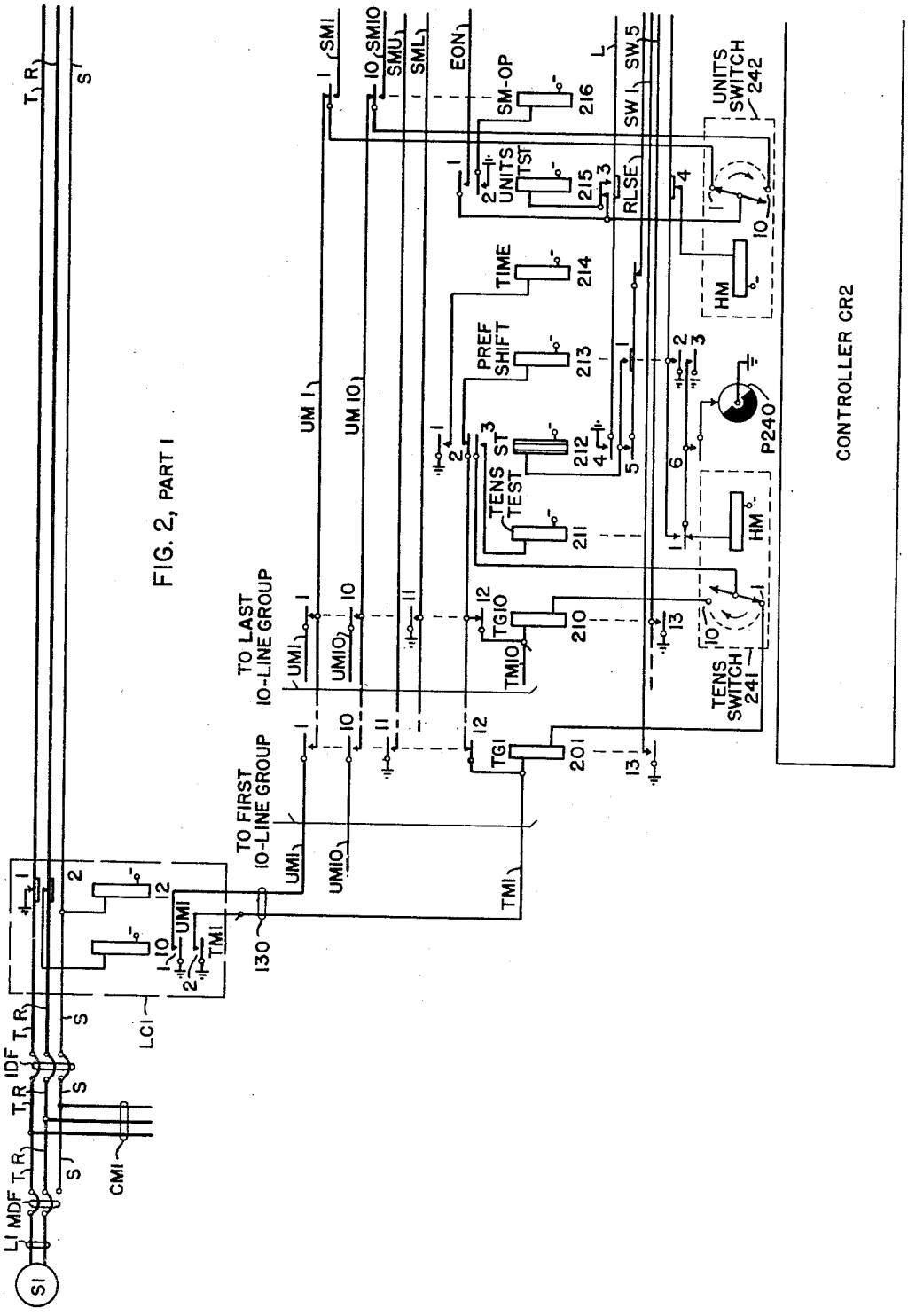

FIG. 2, PART I

Oct. 23, 1956 E. J. LEONARD 2,768,240

CROSSBAR-SWITCH LINE-FINDER SYSTEM

Filed Nov. 12, 1954 3 Sheets-Sheet 3

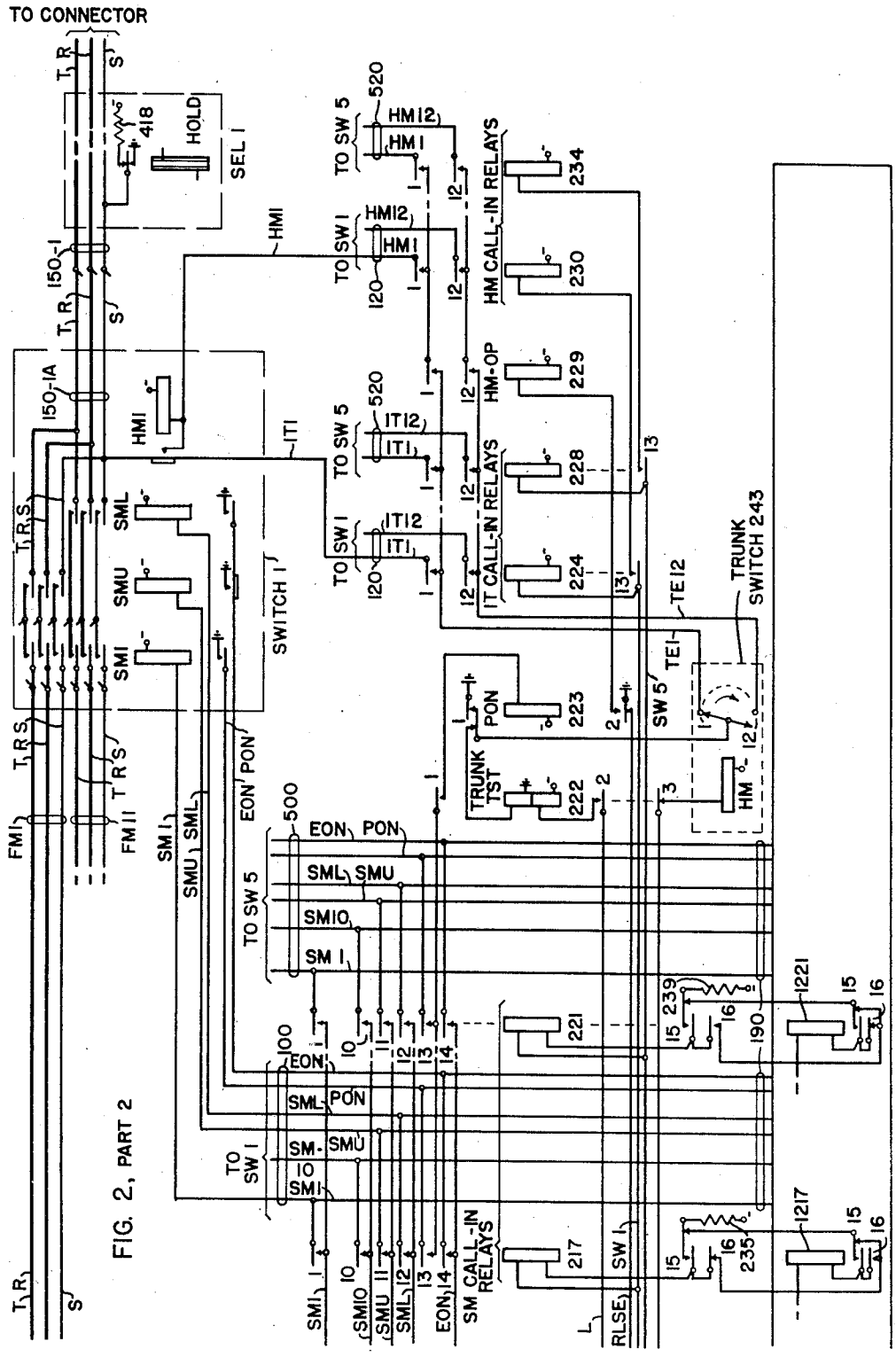

FIG. 2, PART 2

United States Patent Office 2,768,240 Patented Oct. 23, 1956

2,768,240

CROSSBAR-SWITCH LINE-FINDER SYSTEM

Edward J. Leonard, Chicago, Ill., assignor to International Telephone and Telegraph Corporation, New York, N. Y., a corporation of Maryland

Application November 12, 1954, Serial No. 468,443

5 Claims. (Cl. 179—18)

This invention relates generally to a crossbar-switch line-finder system but is concerned more particularly with a line-finder system of that type wherein the trunks are given direct access, as distinct from link access, to the calling lines. Its principal object is to provide a new and improved switchboard arrangement of standardized crossbar switches to comprise separate economical finder groups, together with new and improved controllers for the respective finder groups arranged to avoid false operations when separate controllers are associated with respective sections of sectionalized crossbar switches, or when trunks are connected in common to two or more finder groups having separate controllers.

A group of divided, or two-section switches are commonly used to give access to twice as many lines as an equal number of undivided switches. With the usual number of such crossbar switches (such as ten) mounted on a frame, the total number of lines is more than many authorities deem should be served by a single common controller. Moreover, the number of switches involved may be such that the most desirable number of lines served by one controller cannot be assigned thereto without dividing the lines served by at least one switch into two controller groups, which has not heretofore been considered feasible because a switch has but one set of selecting apparatus and cannot, therefore, be set in but one selecting position at a time.

Further, it is common practice to suitably multiple the trunks serving a frame of finder switches among the several switches according to the traffic load and irrespective of the controller groups. Thus, when the most desirable multipling arrangement is used, two or more controllers may simultaneously test and thereafter select the same idle trunk, which cannot be tolerated, since it often results in two or more lines being connected to the same trunk.

According to the invention, the first part of the foregoing problem is solved by arranging that two controllers serving respective sections of a sectionalized crossbar finder switch have mutually exclusive interlocking arrangements which become effective only when both try at the same time to control the selecting apparatus of the same switch, and without affecting the access of either controller to the non-selective parts of the switch which comprise the sections.

Further, according to the invention, the trunks and the controllers are so arranged and equipped with respect to idle tests of the trunks by the controllers that the successful idle testing of a trunk by any controller depends upon no other controller attempting at that time to test that trunk.

The above-mentioned and other features and objects of this invention and the manner of attaining them will become more apparent and the invention itself will be best understood, by reference to the following description of an embodiment of the invention taken in conjunction with the accompanying drawings comprising Figs. 1 and 2, wherein:

Fig. 1 shows diagrammatically the sectionalized crossbar switches and associated apparatus on a switchboard frame serving four hundred lines divided into four 100-line control groups; and

Fig. 2 shows in circuit diagram the essential circuit details of the apparatus of Fig. 1.

Fig. 1

Referring now to Fig. 1 of the drawings, a line-finder frame is shown, comprising switch groups SG1 and SG2. Each such group, serving two 100-line groups of lines, is associated with selector or connector frames (not shown) by a common group of trunks **150**, comprising trunks **150–1** to **150–60**. The switch groups SG1 and SG2 while being shown arranged side by side may be mounted one above the other on a ten-switch frame.

The line-finder frame in response to a calling condition on any line of the four groups of lines, functions to identify the calling line and associated switch, selects an idle trunk accessible to such line, and exercises control over the switch groups to extend a connection from the calling line to the selected trunk.

Switch group SG1, similar to switch group SG2, mounts five switches SW1 to SW5 and associated controllers CR1 and CR2. Each of the switches, only the first and last ones of each switch group being shown, is similar to those disclosed in United States Patent 2,577,067 of R. P. Arthur.

In such a switch, it is well-known that severing the horizontal multiple between any two adjacent verticals provides two similar groups of horizontal multiples with each group having the original number of termination points and being accessible by a portion of the original number of verticals. The number of verticals having access to each horizontal multiple group being determined by the adjacent verticals selected as the point for severing the horizontal multiple.

In this disclosure, the horizontal multiple of a 25×20 switch is severed between the twelfth and thirteenth verticals, thereby effectively providing two 12×20 sections. In direct-access line-finder systems wherein the lines are terminated on the horizontals and the trunks are terminated on the verticals, the use of a 25×20 switch with the multiple severed as above stated, provides termination points for forty lines and twenty-four trunks, each section serving twenty lines and twelve trunks.

It has been chosen to provide a frame serving four 100-line groups of lines, each group having a common controller. Since the number of lines (40) served by a sectionalized switch is not a multiple of the number of lines (100) in a group, portions of the lines of two separate groups must be terminated on the same switch, resulting in two controllers each controlling respective sections of the same switch.

Rather than assigning the lines of a 100-line group to five sections (each section terminating 20 lines) of three switches, it has been chosen to assign the lines of one 100-line group to the first section of five switches, another 100-line group of lines to the second section of such switches, the third group to the first section of another five switches, and so forth. In this manner, each switch is served by two controllers rather than certain switches being so controlled.

As illustrated, the subscriber lines in any switch group are grouped into ten blocks of twenty lines each and are designated LC1A to LC5B. Therefore, for switch group SG1, comprising five switches SW1 to SW5, with each switch section serving 20 lines, switch group SG1 serves 200 lines, section A of each of the switches terminating 100 lines and section B terminating another 100 lines.

The originating trunks **150–1** to **150–60** are shown multipled between switch groups and between switch sec-

tions of the switches in each group. The disclosed multipling arrangement has been chosen for simplicity in describing the invention, numerous other multipling schemes being readily applicable. As illustrated, trunk 150–1 over its branch 150–1A is terminated on vertical 1 of section A of switch 1; branch 150–1B is terminated on vertical 1 of section B of switch 1; branch 1C on vertical 1 of section A of switch 6 (switch group SG2); and branch 1D on vertical 1 of section B of switch 6. Trunk 150–2 is terminated on verticals 2 of both sections of switches 1 and 6; and trunk 150–60 is terminated on the last vertical of both sections of switches 5 and 10. In this manner, each trunk is accessible from four groups of twenty lines, for a cumulative total of eighty lines, and the four hundred lines (four 100-line groups) of a line-finder frame have access to sixty different trunks. Other trunking arrangements may increase the number of trunks serving each frame or increase the number of lines accessible to each.

In switch group SG1, being similar to switch group SG2, two controllers CR1 and CR2 are provided for the two 100-line groups of lines. Controller CR1 is associated with the line circuits LC1A to LC5A of the 100 lines terminated on section A of switches 1 to 5 by conductors in cable groups 130 to 530, and controller CR2 is associated with the line circuits LC1B to LC5B of the 100 lines terminated on section B of such switches by conductors in cable groups 140 to 540.

Controller CR1 exercises control over the trunks and hold magnets associated with the twelve verticals of section A of switches 1 to 5 over respective cable groups 120 to 520, while controller CR2 exercises control over the trunks and hold magnets associated with the twelve verticals of section B of switches 1 to 5 over respective cable groups 110 to 510.

As hereinbefore noted, since the selecting apparatus (select magnets) of each switch are common to both sections A and B, controllers CR1 and CR2 are interconnected by conductors in cable group 190 to permit one-at-a-time switch association and each are accordingly associated with the same select magnets control wires of switches 1 to 5 over respective cable groups 100 to 500.

From the above, it will be observed that the controllers CR1 and CR2 separately control their own 100-line groups of lines and their associated switch verticals, while both controllers cooperate in controlling the select magnets of the switches.

In the disclosed multipling arrangement, an originating trunk, such as trunk 150–1, is accessible from lines associated with controllers CR1 to CR4 and consequently may be simultaneously tested by two or more controllers. In order to prevent two lines served by different controllers from being connected to the same trunk, each controller includes a trunk test relay (not shown in Fig. 1) which is marginal in operation so that in the event the same trunk is tested by more than one controller, the resistance of the windings of the two or more test relays in parallel limits the current flow over the testing circuit, preventing the operation of any test relay. Upon failure of any test relay to operate, the associated controllers thereupon test the next succeeding trunk, the multipling arrangement being such that the next trunk being tested by one controller is not the same trunk being tested by another because of randomization. With such testing arrangements in the controllers, it is apparent that any desired multipling arrangement may be utilized.

When a line served by section A of switch 1 of switch group SG1 originates a call, the associated line circuit LC1A transmits a tens and units mark to the associated controller CR1 over conductors in cable group 130. Controller CR1 thereupon identifies the switch serving the calling line, determines the horizontal (principal and extension) terminating such line, and proceeds to call-in for test the trunks accessible thereto, such trunks being associated with verticals 1 to 12 of section A of switch 1.

Controller CR1, in response to the tens mark, identifies the switch containing the calling line and individualizes itself with the tens line group containing the calling line. Following such individualization, controller CR1 operates the upper or lower auxiliary select magnet of switch 1 corresponding to the tens group of lines containing the calling line; operates the principal select magnet corresponding to the calling line in the selected tens group responsive to the units mark; and calls-in the test conductors of the trunks accessible to such lines and tests them for selection of an idle one.

The test circuit for selecting an idle trunk includes conductors in cable group 120 which are tested simultaneously with the units-mark line-identifying operation in order to reduce the testing time of the controller.

Responsive to the completion of the auxiliary and principal select magnet setting and the testing of the trunks associated with verticals 1 to 12 of section A of switch 1, controller CR1 operates the hold magnet associated with the selected idle trunk, the operating circuit being over conductors in cable group 120. At such time the calling line is extended through the contact bank of section A of switch 1 to an idle trunk extending to the selector or connector frame.

Controller CR1, in response to the selector being taken for use, clears out permitting controller CR2 to become associated therewith in the event a call in the associated 100-line group is present.

When a call is originated in section A of switch 1 simultaneously with another call from a line in section B of switch 1, controllers CR1 and CR2 both respond to the tens and units marks from their respective lines to identify the line and to extend a connection therefrom to an idle trunk. However, since only one controller can be individualized with a single switch at any one time, one controller must wait for switch access, the controllers being arranged with a fixed order of preference in favor of controller CR1.

During the time in which controller CR1 is individualized with the selecting mechanism of a switch, controller CR2 responds to the tens and units marks from calling lines in its associated section to identify the switch serving the calling line, to determine the principal and auxiliary select magnet terminating such line; and to test and select an idle trunk accessible thereto. In this manner, the waiting controller completes its line-finding action up to the point of switch operation and when it has access to the selecting mechanism of the switch, the extension of a calling connection is completed with a minimum of delay.

Fig. 2

Referring now to Fig. 2, parts 1 and 2 of the drawings, the general operation of controller CR1 in extending a connection from a calling station S1 on a calling line L1 (terminated on upper horizontal 1 of section A of switch 1) to an idle connector or selector will now be described.

The 34 relays (201 to 234) of controller CR1 have principal functions assigned thereto as follows:

Relays 201 to 210 (tens-group relays) operate to individualize the calling tens-group of lines with controller CR1 and to identify the calling line switch location as regards to the principal and auxiliary select magnets serving such line.

Relay 211 (tens-test) operates in series with the calling tens-group relay when the tens-test switch is positioned on such relay;

Relay 212 (start) operates responsive to a calling condition appearing on any line in the 100-line group served by controller CR1 to start the controller into its line-finding operation;

Relay 213 (preference shift) operates on the initiation of each call to advance each of the switches 241 to 243

one step to shift the tens, units, and trunk preference;

Relay **214** (time) operates responsive to controller seizure to control the time which the controller can be individualized with one line;

Relay **215** (units-test) operates when the units switch is positioned on the calling-line units-mark wire, and functions to control the operation of the principal select magnet associated with the calling line;

Relay **216** (select-magnet operate) operates under control of the units-test relay to transfer the units switch from association with the units-mark wires to the select magnet operate wires;

Relays **217** to **221** (select-magnet call-in relays) are associated with respective five switches and operate to individualize the controller with the switch serving the calling line to the exclusion of the other controller associated with the same switch;

Relay **222** (trunk-test) is marginal in operation and operates responsive to the trunk switch being positioned on an idle trunk;

Relay **223** (principal off-normal) is controlled by the trunk-test relay and is operated responsive to an off-normal mark from the principal select magnet to indicate that the hold magnet associated with the selected trunk may be operated as the selecting operation is complete;

Relays **224** to **228** (idle-test call-in relays) are associated respectively with the five switches and are operated to call-in the idle-test conductors of the trunks associated with the switch section serving the calling line;

Relay **229** (hold-magnet operate) is controlled by the trunk-test relay to prepare an operate circuit for the hold magnets associated with the selected idle trunk; and

Relays **230** to **234** (hold-magnet call-in relays) are associated respectively with the five switches and are operated to call-in the hold-magnet operate wires associated with the trunks of the switch section serving the calling line.

Switches **241** to **243** are rotary switches of the well-known type which are operated step-by-step in response to stepping pulses generated by interrupter **P240**. Tens switch **241** is operated step-by-step into engagement with the ten (10) tens mark wires of the ten-line groups; the units switch **242** is operated step-by-step into engagement with the ten (10) units mark wires of the selected tens group; and trunk switch **243** is operated step-by-step into engagement with the twelve (12) idle-test wires associated with the trunks accessible to the calling line. As illustrated, switches **241** and **242** have ten selecting positions while trunk switch **243** has twelve selecting positions.

The detailed operation of controller CR1 in extending a connection from a calling line L1 to an idle selector SEL1 by way of its associated switch and an idle trunk **150** will now be described.

Responsive to the removal of the receiver (not shown) at station S1 on line L1, the usual line loop is closed across the tip and ring conductors T and R. This closed loop is extended through MDF and IDF jumpers to operate line relay **10** of the associated line circuit LC1 through contacts **1** and **2** of cutoff relay **12**.

Line relay **10**, at its contacts **1** and **2** ground the associated units-mark conductor UM1 and the tens-mark conductor TM1. The units-mark conductor UM1 is individual to the calling line while the tens-mark conductor TM1 is common to ten lines in the calling ten-line group of lines.

Ground on the tens-mark wire TM1 is extended over the associated conductor in cable group **130** to the battery-connected winding of preference shift relay **213** through break contacts **12** of the associated tens group relay **201** and the break contacts **2** of start relay **212**.

Preference shift relay **213** operates and at its make contacts **2** and **3** extend ground potential to the battery-connected winding of each of the motor-magnets of switches **241**, **242**, and **243** causing these switches to advance their brushes to the next succeeding position. Contacts **1** of relay **213** extend ground potential from break contacts **2** of off-normal relay **223** through break contacts of time relay **214** to the battery-connected winding of start relay **212**.

Start relay **212** operates and at its make contacts **1** extends ground potential to the battery-connected winding of time relay **214**; its break contacts **2** open the operate circuit of preference shift relay **213**; its make contacts **3** prepare an operate circuit for tens-test relay **211**; its make contacts **4** ground the lock wire L; its make contacts **5** completes a self-locking circuit to normally-grounded release wire RLSE independent of relay **213**; and its make contacts **6** extend pulsing ground from interrupter **P240** to the battery-connected winding of the motor magnet of tens switch **241**.

Time relay **214** is a slow-operating relay of any type suitable for providing a delay time of approximately one-tenth of a second. After such period of time, relay **214** operates and at its contacts opens the operate circuit of start relay **212**, causing the controller to clear out by removal of ground from the lock wire L.

Preference shift relay **213** restores and removes ground from the winding of the motor magnet of each of the stepping switches **241** to **243**. At such time, switch **241** is under control of the interrupter **P240** through contacts **6** of relay **212**.

The ground appearing on the tens-mark conductor TM1 is extended to one side of the winding of the tens-group relay associated with the tens group containing the calling line and the other side of each tens-group relay is connected to separate positions on the bank of switch **241**. The brush of tens switch **241**, having battery potential from the winding of the tens-test relay **211** appearing thereon, advances under control of interrupter **P240** across the switch bank, successively engaging the tens-mark wires. Assuming the preference shift relay **213** to have advanced the brushes of switch **241** to position **1**, and the tens-mark wire TM1 is grounded, the battery potential appearing on the brush is extended through the winding of the tens-group relay **201** to the ground appearing on the tens-mark conductor TM1, operating the tens group relay **201** and tens-test relay **211** in series.

In the event that the calling line is served by a ten-line group other than the first, switch **241** advances step-by-step from ground pulses generated by interrupter **P240** until the brushes become positioned on a group relay having the associated tens-mark conductor grounded.

Responsive to the operation of the first tens-group relay **201**, make contacts **1** to **10** extend the units-mark conductors associated with the ten lines in the calling ten-line group through break contacts of the select-magnet operate relay **216** to the contact bank of units switch **242**; its contacts **11** ground the upper select magnet wire SMU to identify the calling line as one in the upper ten-line groups of lines; its contacts **12** restore relay **213**, as noted; and its make contacts **13** ground the switch wire SW1 to identify the calling line as one served by switch **1**.

Tens-test relay **211** at its break-make contacts transfers the pulsing ground from the motor magnet of tens switch **1** to the motor magnet of units switch **242** and trunk switch **243** causing them to advance their brushes step-by-step across the switch bank. At such time switch **241** is positioned on the tens wire corresponding to the calling ten-line group.

Responsive to the grounding of wire SW1, an operate circuit is extended to the battery-connected windings of select magnet call-in relay **217**, idle-test call-in relay **224**, and hold magnet call-in relay **230**.

Idle-test call-in relay **224**, associated with the idle-test wires of the trunks terminated on the verticals of section A of switch **1**, operates and at its contacts **1** to **12** connect the idle-test wires IT1 to IT12 to corresponding contacts on the switch bank of trunk switch **243** in preparation for testing operations to select an idle trunk. Contacts **13** of relay **224** completes an operate circuit for the hold-magnet call-in-relay **230**.

Hold magnet call-in relay **230**, associated with the hold magnet operates wires of the trunk verticals of section

A of switch 1, operates and at its contacts 1 to 12, connects the hold magnet wires HM1 to HM12 to corresponding contacts 1 to 12 on relay 229 in preparation for operating the hold magnet serving the selected idle trunk.

The operation of select magnet call-in relay 217 in response to the grounding of wire SW1 will be described hereinafter.

The battery-connected winding of units-test relay 215 is connected to the brush of units switch 242 and the battery-connected upper winding of trunk-test relay 222 is connected to the brush of switch 243. As units switch 242 and trunk switch 243 advance their brushes across their respective switch banks under control of interrupter P240, the brush of switch 242 engages the units mark wires UM1 to UM10 and the brush of switch 243 engages the idle-test wire extensions TE1 to TE12 associated with the twelve trunks served by the switch sections.

Responsive to the engagement of the brush of units switch 242 with the switch bank contact associated with the units wire UM1, units wire UM1 being grounded responsive to the calling condition on line L1, units test relay 215 operates and locks to the ground on lock lead L at its make contacts 3.

Make contacts 1 of units test relay 215 connect the brush of units switch 242 to the extension off-normal wire EON independent of the units-test relay winding; at its make contacts 2 closes an operate circuit for select-magnet operate relay 216; and at its break contacts 4 disconnects the pulsing wire of interrupter P240 from the motor magnet of switch 242, leaving switch 242 positioned in accordance with the grounded units mark wire UM1.

Responsive to the operation of the tens-test relay 211 and the noted transfer of the pulsing ground from the motor magnet of switch 241 to the motor magnet of switch 243, trunk switch 243 advances its brush step-by-step across its contact bank. At such time, as hereinbefore noted, idle-test call-in relay 224 is operated and the idle-indicating battery potential (resistor 418 of selector SEL1) or ground potential (make contacts 1 of selector SEL1) appearing on the idle-test conductor IT1, depending upon whether the selector is idle or busy, is extended through the brush and engaged bank contact of switch 243 and through break contacts 1 of primary off-normal relay 223 to the upper winding of trunk-test relay 222.

The upper winding of trunk test relay 222 is marginal in that if a trunk-test relay of another controller is in parallel with relay 222, such condition arising when two controllers test the same trunk simultaneously, the current flow through the marginal winding is limited to a non-operate value, and neither of the two test relays operate. The multipling and grading distribution is randomized so that in the event that two controllers test the same trunk at the same time and then advance to the next position, the testing of the same trunk again will not ordinarily occur.

Assuming the brush of trunk switch 243 is in engagement with the bank contact 1 which is associated with trunk branch 150–1A, and assuming selector SEL1, associated with trunk 151 is idle, battery potential from the current-limiting resistor 418 of selector SEL1 appears on the ground-connected winding of trunk test relay 222.

Trunk test relay 222 operates and locks operated through its make contacts 2 to the ground potential appearing on the lock conductor L. At its make contacts 1, trunk test relay 222 extends the principal off-normal wire PON to the battery-connected winding of relay 223; and at its break contacts 4 removes the pulsing ground from the motor magnet of trunk switch 243, stopping it with its brush in associated with the selected idle trunk.

At this point, assuming select magnet call-in relay 217 has not yet operated, units switch 242 is positioned on the select magnet wire corresponding to the calling line and switch 243 is positioned on the hold magnet wire associated with a selected idle trunk. Normally, however, select magnet call-in relay 217 is operated simultaneously with the idle-test call-in relay 224 and select magnet operation occurs coincidentally with the trunk test operation just described.

Following the operation of units test relay 215, select-magnet operate relay 216 operates and at its break-make contacts 1 to 10 transfers the switch bank wires from the units-mark wires to the select-magnet wires SM1 to SM10 in preparation for operating the select magnet serving the calling line, when the select magnet call-in relay operates.

In the event that controller CR2 is idle, an operate circuit for select-magnet in relay 217 is complete from battery through current-limiting resistor 235, break contacts 16 of relay 217, break contacts 16 of the relay 217 in controller CR2, if such controller is idle, break contacts 17 of relay 217, and the winding of relay 217 to the ground appearing on wire SW1.

Select magnet call-in relay 217 thereupon operates and at its make contacts 1 to 10 closes an operate circuit for the principal select magnet SM1 to SM10 of the associated switch; at its contacts 11 and 12 extends the grounded one of the auxiliary select magnet wires SMU and SML to their associated magnets; at its make contacts 13 and 14 extend the off-normal wires from the principal magnets SM1 to SM10 and the auxiliary magnets SMU and SML to respective wires PON and EON; at its make contacts 15 locks relay 217 operated independently of controller CR2; and at its break contacts 15 and 16 removes operating potential from the call-in relay of controller CR2.

The ground from make contacts 11 appearing on wire SMU is thereupon extended through make contacts 11 of relay 217 to the battery-connected winding of the upper select magnet SMU.

Select magnet SMU operates to select the upper ten horizontals of switch 1 and at its off-normal contacts grounds the extension off-normal wire EON.

The ground appearing on the extension off-normal wire EON is extended through make contacts 14 of relay 217 to make contacts 1 of the units test relay 215. Assuming units-test relay 215 is operated and switch 242 is positioned in its illustrated position, ground on wire EON is extended to the brush on units switch 242 and over the engaged switch bank contact 1, through contacts 1 of relay 216, and through the corresponding contact on relay 217 to the battery-connected winding of principal select magnet SM1.

Principal select magnet SM1 operates to select the horizontal in the selected group of ten upper horizontals terminating the calling line, and to close its off-normal contacts, grounding the primary off-normal wire PON.

Ground on the off-normal wire PON is extended through make contacts 13 of operated select magnet call-in relay 217 to make contacts 1 of the trunk-test relay 222. At such time, assuming trunk-test relay 222 to be operated and switch 243 positioned as illustrated, the ground potential on wire PON is extended to the battery-connected winding of the primary off-normal relay 223.

Primary off-normal relay 223 operates and at its make contacts 2 extends ground potential to the battery-connected winding of relay 229, which operates and connects hold magnet operate wires HM1 to HM12 to respective test conductors TE1 to TE12, and at its make-before-break contacts extends ground potential through the brush of switch 243 and engaged bank contact to the battery-connected winding of the hold magnet HM1 associated with the selected trunk 150. At the same time, its break contacts 2 remove ground potential from the release wire RLSE.

Hold magnet HM1 operates and closes the crosspoints selected by the principal and auxiliary select magnets

and the hold magnet, thereby extending the connection from the calling line L1 to the selected idle trunk 150.

Responsive to the operation of hold magnet HM1, its operating ground is further extended through its off-normal contacts to the sleeve conductor S of the associated trunk, such ground being extended rearwardly to operate the cutoff relay of the calling line circuit, causing line relay 10 to restore and remove ground potential from the units-mark and tens-mark wires.

Responsive to the seizure of selector SEL1, the operation of the usual hold relay therein grounds the sleeve conductor S to maintain the hold magnet HM1 and the cutoff relay 12 operated after the controller CR1 is restored, and removes idle-indicating battery potential from the sleeve as a current-saving operation.

At the time that relay 223 operates, its break contacts 2 remove ground potential from the release conductor RLSE as noted, thereby open-circuiting start relay 212 which due to the copper sleeve surrounding its core, is slow-restoring. After a slight delay, start relay 212 restores to remove ground potential from the lock conductor L thereby restoring units-test relay 215 and trunk-test relay 222. Responsive to the removal of ground from the units-mark and tens-mark wire by the restoration of line relay 10, the tens-group relay, tens-test relay, the operated select magnets, and the call-in relays are restored, thereby returning the controller to common use.

In the event that the controller CR1 fails to find an idle trunk within a predetermined time, slow-operating time relay 214 operates and open-circuits the start relay 212 which restores to clear out the controller in the manner above described.

In the event that controller CR1 and controller CR2 each receive a call from lines served by switch 1, the hereinbefore described operation takes place giving select magnet call-in relay 217 of controller CR1 preference over the corresponding relay of controller CR2. In this manner no interference between the common elements, such as the select magnets of switch 1 is encountered.

At such time, however, the tens switch, units switch, and trunk switches of the waiting controller are positioned to identify the calling line and to select an idle trunk irrespective of the operation of the select magnet call-in relay of the waiting controller. In this manner, the delay time of the waiting call is minimized and when the switch become idle, as regards the waiting controller, the associated select magnet call-in relay of the waiting controller operates to complete the switch horizontal and vertical selection to extend the calling connection.

Time relay 214 is shown under direct control of start relay 212 but arrangements may be provided wherein the timing is discontinued in a controller waiting for switch individualization so that a more critical adjustment of the timing relay is possible, the timing then beginning anew responsive to the operation of the associated select magnet call-in relay.

I claim:

1. In a switching system for interconnecting lines and trunks, crossbar switches each including two sections and having select magnets common to both sections, each section including a set of horizontal multiples corresponding respectively to the common select magnets and including a set of vertical multiples intersecting the associated horizontal multiples, each section further including hold magnets and associated crosspoint means for connecting any horizontal multiple of the section to any vertical multiple thereof under the joint control of the hold magnets of the section and the common select magnets, lines connected to one set of the multiples of any said section and trunks connected to the other set of the multiples thereof, whereby the crosspoint means of any such section can interconnect any associated trunk with any desired associated line, switch controllers associated with respective groups of the said sections with each controller being common to the sections of its associated group of sections, the sections of at least one switch lying in separate groups and being assigned to separate switch controllers, first means in any switch controller for temporarily individualizing that controller with any associated section, second means in any switch controller for temporarily individualizing that controller with the select magnets of the switch containing the individualized section, each switch controller including means for selectively controlling the individualized common select magnets and the hold magnets of the individualized section to connect any desired associated trunk with any desired associated line, means in each of the switch controllers which are associated with respective sections of the same switch for insuring that not more than one switch controller can become effectively individualized with the select magnets of the same switch at the same time.

2. In a switching system according to claim 1, wherein a first switch controller is associated with one section of each switch of a group of switches of which the other section of each is associated with another switch controller, means contained in the said means for individualizing the switch controllers for permitting the said first switch controller to become effectively individualized with its associated section and with the common select magnets of any switch of said group irrespective of the state of individualization as to any other switch of the group and another switch controller.

3. In a switching system according to claim 1, means included in the said individualizing means for permitting a switch controller to become individualized with its associated section of a switch irrespective of the concurrent individualization of the select magnets of that switch with another switch controller.

4. In a switching system according to claim 1, wherein the switches are line-finder switches with the lines connected to respective horizontal multiples and with the trunks connected to respective vertical multiples of any section, means responsive to a calling condition on any line for controlling the said first and second individualizing means of the associated switch controler to individualize that controller with the hold magnets of the switch section containing the calling line and with the select magnets of that switch, means in the switch controller for selecting the calling line and for selecting an idle trunk associated with the pertaining switch section, means in the switch controller for operating the select magnet corresponding to the horizontal multiple connected to the selected calling line, and for operating the hold magnet associated with the selected idle trunk, to control the corresponding crosspoint means to connect the selected trunk to the selected calling line.

5. In a switching system according to claim 4, wherein certain of the trunks are connected to vertical multiples of separate sections which may be associated with separate switch controllers, temporary means in any controller for applying a first distinctive marking potential to a conductor of the selected trunk to mark such trunk unavailable to any other controller before it has been connected to the calling line, and means responsive to the connection of the selected trunk to the calling line for substituting a second distinctive marking potential on the said conductor.

References Cited in the file of this patent

UNITED STATES PATENTS

2,674,657	Bellamy et al.	Apr. 6, 1954
2,683,773	Diesen	July 13, 1954
2,686,841	Boyer	Aug. 17, 1954