May 2, 1933. E. W. BALLENTINE 1,906,897

HEATING UNIT

Filed March 11, 1932

Fig. 1.

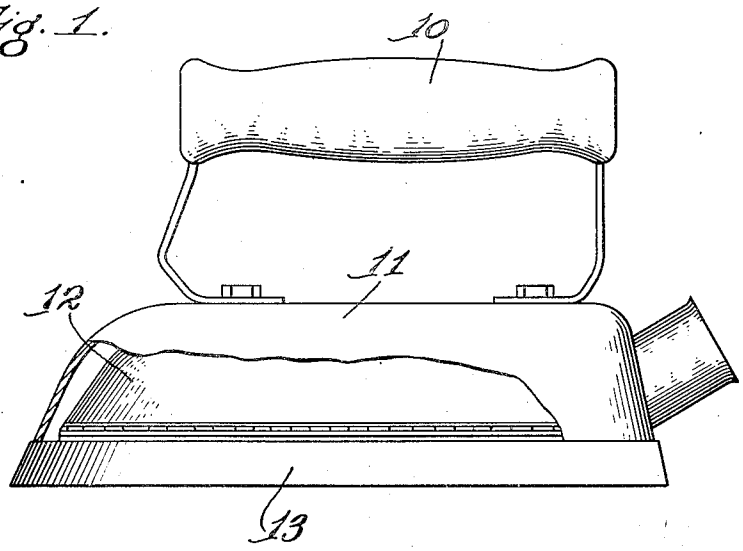

Fig. 2.

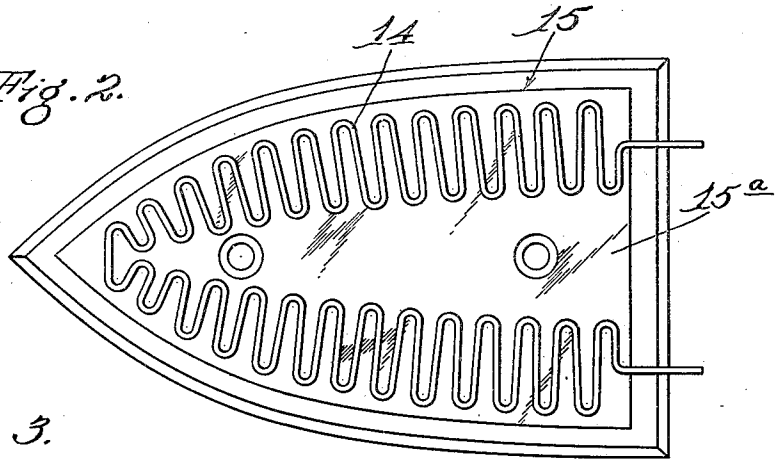

Fig. 3.

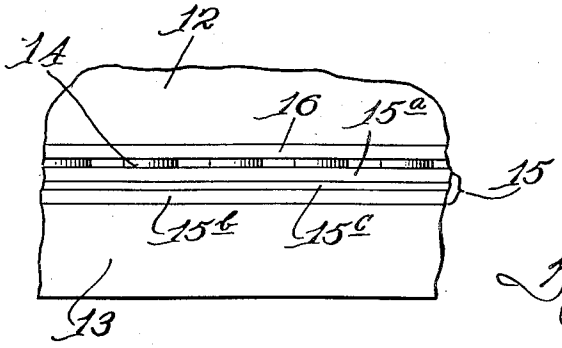

Inventor.
Earle W. Ballentine.
By Dyrenforth, Lee, Christy, Sweet & Wilks
Attys.

Patented May 2, 1933 1,906,897

UNITED STATES PATENT OFFICE

EARLE W. BALLENTINE, OF CHICAGO, ILLINOIS, ASSIGNOR TO SOLAR INDUSTRIES, INC., OF CHICAGO, ILLINOIS, A CORPORATION OF ILLINOIS

HEATING UNIT

Application filed March 11, 1932. Serial No. 598,271.

This invention relates to improvements in heating units and, more especially, to a heating unit including insulating material made of mica.

One of the features of my invention is the provision of a duplex or double sheet of mica including different kinds of mica to form the insulating material.

It is well known that mica possesses excellent properties as a dielectric at high temperatures but that there is a certain temperature at which it fails. This temperature at which it fails or decomposes is called its calcining point. This failure is very detrimental to a heating element because the decomposition products of mica are extremely corrosive to metals. When the resistor of a heating element reaches the calcining point, it reacts with the decomposition products of the mica and is thereby destroyed.

There are two distinct varieties of mica, namely, muscovite, sometimes called white mica, and phlogopite, sometimes called amber mica. These two varieties differ in composition and properties. Muscovite mica possesses higher dielectric strength and greater hardness. It also possesses greater insulating resistance than phlogopite. In fact, at high temperature, the insulation resistance of phlogopite is so low that a very considerable leakage current will flow through it and thereby cause its failure by puncturing. There is also considerable lack of uniformity in the electrical properties of phlogopite mica. In other words, muscovite mica is a very good electrical insulator for electric heating elements, except for the fact that it calcines at a relatively low temperature, substantially somewhere between 1100° F. and 1200° F. Phlogopite mica, however, has a relatively high calcining point. Some varieties will stand temperatures ranging from 1800° to 2200° F. This form of mica, however, has a relatively low insulation resistance and high negative temperature coefficient at elevated temperatures. When leakage occurs, the heating effect of the leakage current tends to accelerate the decrease of resistance and as soon as this becomes low enough, rupture of the dielectric occurs.

It is difficult to cover the whole surface of a heating plane with a resistor. Because of this, the energy density or temperature of the resistor is considerably higher than the energy density or temperature of the heating plane. This means that in the ordinary heating unit, the temperature of the resistor is higher than the temperature of the dielectric at points removed a short distance from the resistor.

In the practice of my invention, I make use of the properties of the different kinds of mica above referred to and construct a heating element of two layers of mica, one layer being muscovite mica and the other, phlogopite mica. In the use of the insulator, the phlogopite mica is placed in contact with the resistor and the muscovite mica is placed in contact with the sheath or surface to be heated. For example, the phlogopite mica may consist of a single sheet or multiplicity of films aggregating a total thickness of from .002 to .005 inch and the muscovite mica may consists of a single sheet or multiplicity of films having a total thickness of from .007 to .010 inch.

In the accompanying drawing, I have illustrated my improved heating unit embodied in an electric heating appliance, for example, an electric iron, in which—

Figure 1 is a view in side elevation with a portion of the casing broken away; Fig. 2 is a top plan view of the heating unit; and Fig. 3 is an enlarged fragmentary view of the heating unit.

As shown in the drawing, an electric iron is illustrated, the same including the handle 10, casing 11, casting 12 and heating member or sole plate 13.

The heating unit is placed between the members 12 and 13 and adapted for heating the latter. Such heating unit is shown more in detail in Fig. 3. The same includes the resistor or resistance wire 14 on top of a duplex or double sheet or layer of mica 15. This duplex layer of mica includes an upper layer 15^a of phlogopite mica and a lower layer 15^b of muscovite mica. As here shown, the two layers may preferably be bonded or cemented together by a layer of cement 15^c.

A layer of suitable insulating material 16 may be employed above the resistance wire 14 to insulate the same from the member 12.

While I have shown and described certain embodiments of my invention, it is to be understood that it is capable of many modifications. Changes, therefore, in the construction and arrangement may be made without departing from the spirit and scope of the invention as disclosed in the appended claim, in which it is my intention to claim all novelty inherent in my invention as broadly as permissible, in view of the prior art.

What I regard as new, and desire to secure by Letters Patent, is:

A heating unit including a resistor and a double layer of mica including a layer of phlogopite mica and a layer of muscovite mica, the layer of phlogopite mica being located adjacent the resistor.

In witness whereof, I have hereunto set my hand, this 7th day of March, 1932.

EARLE W. BALLENTINE.