Nov. 28, 1961 W. G. FRANKE 3,010,119

THERMOSTATIC MEANS FOR CONTROLLING TOILET ROOM FIXTURES

Filed March 9, 1959

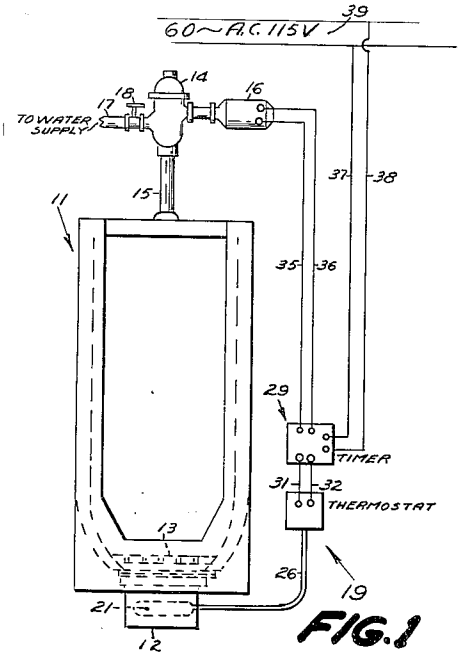

FIG. 1

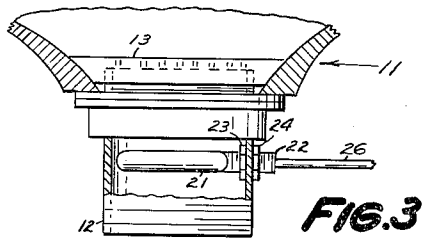

FIG. 3

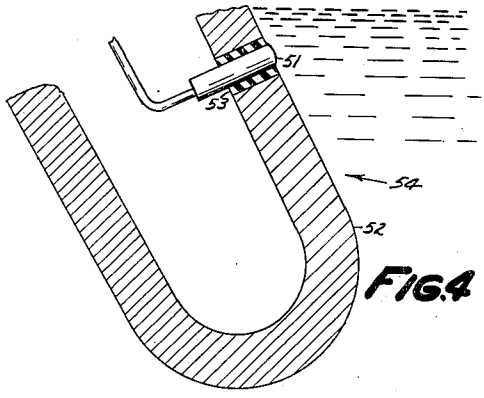

FIG. 4

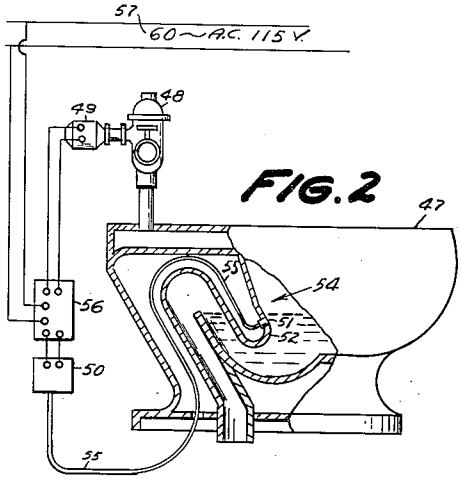

FIG. 2

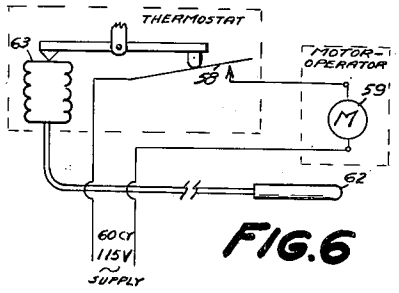

FIG. 6

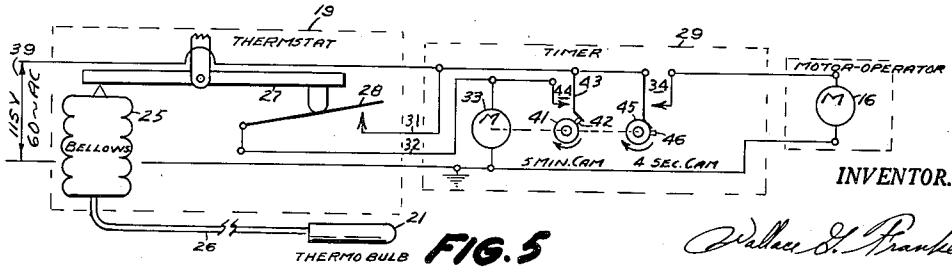

FIG. 5

INVENTOR.

Wallace G. Franke

United States Patent Office 3,010,119 Patented Nov. 28, 1961

3,010,119
THERMOSTATIC MEANS FOR CONTROLLING TOILET ROOM FIXTURES

Wallace G. Franke, 803 S. Story St., Appleton, Wis.
Filed Mar. 9, 1959, Ser. No. 797,915
3 Claims. (Cl. 4—249)

This invention relates to a thermostatic means for automatically operating flushing valves of urinals and/or water-closets.

The purpose of this invention is to provide a "user" operated automatic flushing system for urinals or water-closet fixtures whereby a considerable amount of water is saved. Such a system is entirely automatic. It is "user" operated without his knowledge and the system remains "dead" as long as nobody uses said toilet room fixtures. The system thereby utilizes a minimum amount of water. This invention applies to toilet room fixtures such as urinals, water-closets, or the like.

An object of this invention is the provision of a thermostatic means for controlling a flushing system.

Another object is to provide a urinal or water-closet with temperature responsive means for controlling the flushing thereof.

Still another object of this invention is the provision of gaseous thermostat means including a remote sensing gaseous thermo bulb, associated with a urinal or water-closet fixture, for controlling the flushing of said urinal or water-closet fixtures.

Other specific objects and many of the attendant advantages of this invention will be more readily appreciated as the same becomes better understood by reference to the following detailed description when considered in connection with the accompanying drawings in which like reference numerals designate like parts throughout the figures thereof and wherein:

FIG. 1 shows a front elevation of the invention as applied to a urinal;

FIG. 2 illustrates a side elevation of the invention, partly in section, as applied to a water-closet bowl;

FIG. 3 is an enlarged fragmentary view of the discharge outlet spud portion of the urinal shown in FIG. 1, showing the thermo bulb mounted therein;

FIG. 4 is an enlarged fragmentary view of the built-in trap forming shell portion of the water closet bowl shown in FIG. 2, showing the sensing thermo bulb mounted on the lip thereof;

FIG. 5 is a wiring diagram of the circuited thermostatic switch timer, and flush valve motor-operator, said diagram showing the elements thereof positioned at the commencement of a cycle of operation; and

FIG. 6 shows a modified circuit wherein the timer is omitted.

Referring now to the drawings, wherein like reference characters designate like or corresponding parts throughout the several views, there is shown a urinal, generally indicated at 11, including at its lower end a discharge outlet or spud 12 having a flat metal strainer 13 thereacross, and having a trap, not shown, communicating therewith.

A flush valve 14 operatively communicates with the upper portion of said urinal 11 through means of flush connection pipe 15. Said flush valve 14 is equipped with a motor-operator 16 to operate said flush valve 14.

Flush water is conducted to the flush valve 14, from a supply source not shown, through means of a supply pipe 17 controlled by a shut-off valve 18.

A conventional gaseous thermostatic switch means, generally indicated at 19, includes a remote gaseous thermo bulb 21, toroidal or ring shaped which is mounted in the spud 12 below the strainer 13 so as to expose the thermo

bulb to the temperature of warm body urine as said urine flows through said spud and over said bulb.

The spud wall is apertured to receive the threaded bulb stem 22 therethrough. Nuts 23 and 24 are threadedly engaged on said stem, on each side of the spud wall, and drawn tightly thereagainst, for rigidly securing said thermo bulb on said spud. Obviously, gasket means can be used adjacent said nuts to water seal said thermo bulb on said spud.

The thermo bulb 21 communicates with the bellows 25 of the thermostatic switch through means of capillary tube 26.

The effect of the expansion of gas in the thermo bulb bellows system is utilized to expand and longitudinally extend said bellows and to actuate pivoted arm 27 for controlling enclosed snap switch 28. The expansion of the gas in the thermo bulb bellows system is an effect resulting from the change of temperature of said gas when said gaseous filled thermo bulb 21 is subjected to the warm urine flowing thereover.

The thermostatic switch 19 is electrically connected to a timer mechanism generally indicated at 29 through means of conductors 31 and 32.

The timer mechanism 29 is of conventional construction, suitable for the purpose, responsive to thermostatic switch 19 and operative to energize motor-operator 16 with an electrical pulse of a short predetermined duration following a long time delay interval of a predetermined duration beginning with the closing of thermostatic switch means 19, that is, beginning with a signal from said switch that the urinal is being used. It is preferred that the short pulse be about 4 seconds in duration, while the time delay period be about 5 minutes in duration.

The closing of the snap switch 28 in the thermostat starts the timer motor 33 to operate for 5 minutes, after which the timer stops. However, just before the timer stops it closes an electric switch 34 and causes a short pulse of electricity to energize the motor-operator 16 which in turn actuates the flush valve 14. The timer 29 is readily adjustable so that the motor-operator is in tune with the timer. A short pulse is adequate to rotate the motor-operator and therefore trip the flush valve.

The electrical output of the timer mechanism is fed to the motor-operator 16 through means of conductors 35 and 36.

The electrical input to the timer mechanism 29 is provided through conductors 37 and 38 connected across an electrical supply potential 39 of alternating current of 115 volts and of 60 cycle frequency.

Operation

Assume a starter position and relation of elements such as shown in FIG. 5. When a "user" uses the urinal, the warm body urine is conducted through the strainer 13 and into the spud 12 where some of it flows onto and over the thermo bulb 21 and thence is discharged from said spud into a trap not shown.

The effect of the warm urine on the thermo bulb is to expand the gas therein. As a result of such gas expansion, bellows 25 is expanded and extended longitudinally upwardly, thereby actuating pivoted arm 27 to close snap switch 28 and closing an initial electrical circuit through timer motor 33 and causing said motor to be energized and to rotate.

Mounted to be rotated by said timer motor 33 is a homing cam means 41 having a sharp tooth 42. Said cam means 41 requires 5 minutes to make one complete revolution.

As timer motor 33, and its associated homing cam 41, commence to rotate, poised switch armature 43 is released from cam tooth 42 thereby closing switch means 44. This

switch closing establishes a holding circuit through motor 33 and functions to maintain timer motor 33 energized and operating for about 5 minutes, even though the "user" walks away from the urinal and the initial circuit through the timer motor 33 is opened as a consequence of the effect of the resulting temperature drop change on the gas in the thermo bulb 21.

After the lapse of said 5 minutes of motor operation, the cam tooth 42 engages switch armature 43 and actuates it into an open poised posiiton, at which instant the timer motor stops, completing a cycle of operation.

Motor-operator cam 45, mounted to rotate with homing cam 41, is likewise provided with a sharp tooth 46. Said cam 46 closes switch 34 for about 4 seconds just before timer motor is stopped, thereby energizing motor-operator 16 with a 4 second pulse to operate and actuate flush valve 14. The 4 second pulse if sufficiently long to produce one complete operation of the motor-operator 16 and therefore trip and open the flush valve 14.

FIG. 2 shows a water-closet bowl 47 having mounted thereon a flush valve 48 controlled by a motor-operator 49. Said bowl is provided with a built-in trap, although a water-closet having separate trap means is also contemplated within the scope of this invention.

A conventional gaseous thermostatic switch means 50, such as generally indicated diagrammatically at 19, FIG. 5, includes a remote gaseous thermo bulb 51 mounted in the lip 52 of the trap forming shell generally indicated at 54, of said bowl 47. Said shell lip is apertured to receive a rubber gasket sleeve 53 in which is press fit the thermo bulb 51 for seal purpose. The bulb is preferably, though not necessarily, disposed about one inch below the normal bowl water-line.

The communicating capillary tube 55 is directed upwardly within the shell interior, thence downwardly through the hollow structure of the bowl 47, thence through the bottom of said bowl, and to bellows in thermostat 50.

The output of said thermostat 50 is fed into a timer mechanism 56, such as indicated diagrammatically at 29, FIG. 5, and the output from the timer mechanism 56 is fed into motor-operator 49.

The electrical input to the timer 56 is supplied through means of supply potential 57 being alternating current of 115 volts and of 60 cycle frequency.

In view of the fact that the elements and circuitry for the bowl of FIG. 2 is the same as the elements and circuitry for the urinal of FIG. 1, the operation thereof is the same as described above for said urinal arrangement, and therefore will not be repeated.

If desired the timer mechanism can be omitted from the circuit and the thermostat switch means connected directly to the motor-operator thereby causing operation of the flush valve immediately upon the temperature responsive bulb means being thermally effected, see FIG. 6 diagram. In this modified circuit a thermostat switch 58 and a flush valve motor-operator 59 are connected in series with electric supply source 61. A thermo bulb

62, mounted and disposed such as thermo bulb 21 in FIG. 1 or thermo bulb 52 in FIG. 2, communicates with a bellows 63 for actuating switch 58 thereby energizing flush valve motor operator 59.

Some characteristic features of this invention are temperature responsive means for automatiaclly operating flushing means for a urinal; the provision of a remote sensing gaseous thermo bulb, disposed in a urinal, for automatically operating flushing means for said urinal; and the provision of thermostatic means for automatically controlling the flushing system of a water-closet.

Obviously many modifications and variations of the present invention are possible in the light of the above teachings. It is therefore to be understood that, within the scope of the appended claims, the invention may be practiced otherwise than as specifically described.

What is claimed and desired to be protected by Letters Patent of the United States is:

1. A water-closet provided with hollow interior structure, and temperature responsive means associated with said water-closet, said temperature responsive means being disposed in said water-closet to be affected by the temperature of excrement discharged in said water-closet, and said temperature responsive means extending into said hollow interior structure for connection with exterior means.

2. A water-closet provided with a hollow trap forming shell, and a wall of said shell being apertured at the normal water line in said water-closet, and temperature responsive means associated with said water-closet, said temperature responsive means being received in said aperture and extending into said hollow trap forming shell for connection with external means.

3. A water-closet provided with a hollow trap forming shell communicating with hollow interior structure in said water-closet, said hollow interior structure communicating with the atmosphere through means of an opening in the bottom of said water-closet, a wall of said shell being apertured at the normal water line in said water-closet, and temperature responsive means associated with said water-closet, said temperature responsive means comprising a sensing element and transmitting means connected thereto for transmitting the temperature effects of said sensing element, said sensing element being received in said aperture, and said transmitting means extending in said hollow trap forming means, in said interior structure, and in said opening.

References Cited in the file of this patent

UNITED STATES PATENTS

702,536	Bunting	June 17, 1902
1,441,007	Littlefield	Jan. 2, 1923
1,532,905	Lawler	Apr. 7, 1925
1,942,269	Davies et al.	Jan. 2, 1934
2,041,962	Robertson	May 26, 1936
2,635,691	Filliung	Apr. 21, 1953
2,649,591	McRae	Aug. 25, 1953