(No Model.) 3 Sheets—Sheet 1.

J. H. MARVEL & W. H. PEIRSOL.

TRUCK.

No. 590,437. Patented Sept. 21, 1897.

Fig. 2.

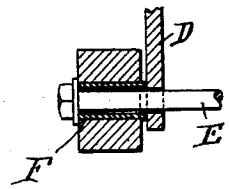

Fig. 1.

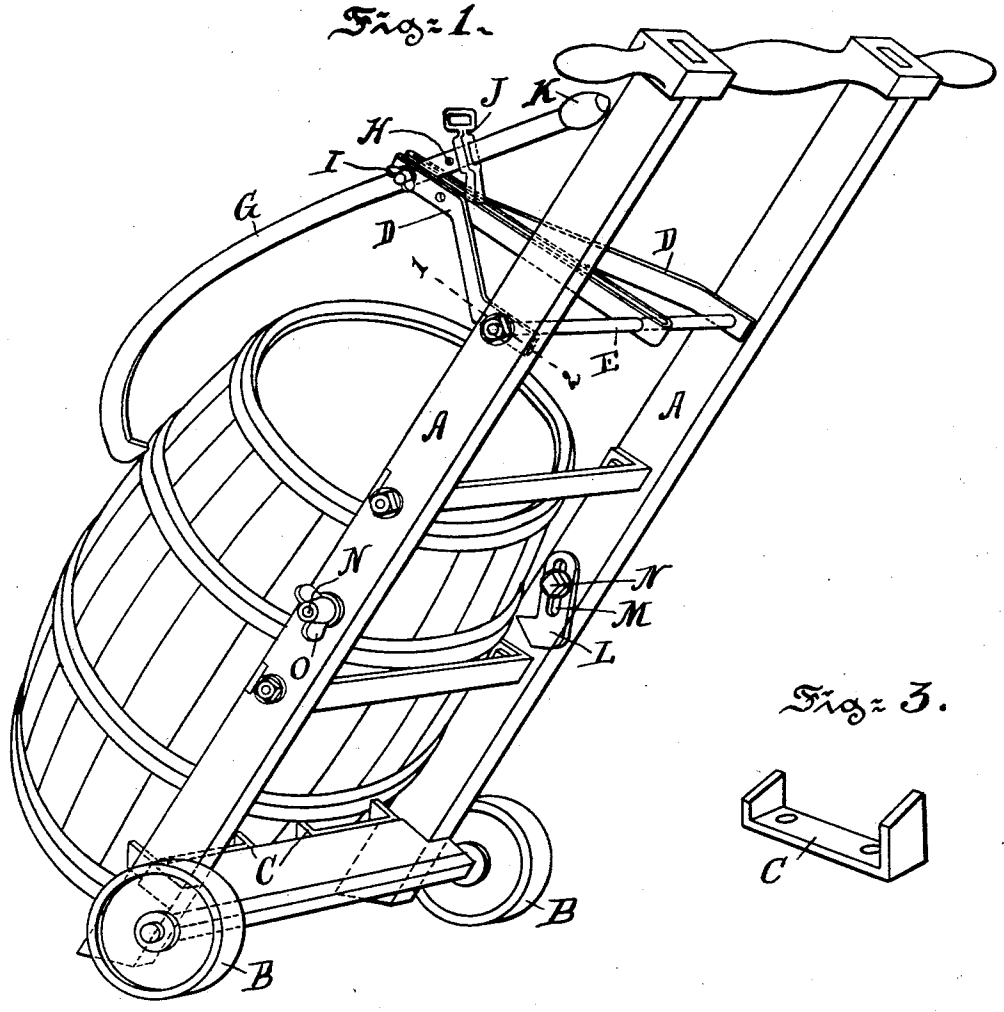

Fig. 3.

Witnesses:
W. A. Schaefer.
Wm R. Webster

Inventors.
Joseph H. Marvel
William H. Peirsol
by their attorney
Chas A. Reiter.

THE NORRIS PETERS CO., PHOTO-LITHO., WASHINGTON, D. C.

(No Model.) 3 Sheets—Sheet 2.

J. H. MARVEL & W. H. PEIRSOL.

TRUCK.

No. 590,437. Patented Sept. 21, 1897.

Fig. 5.

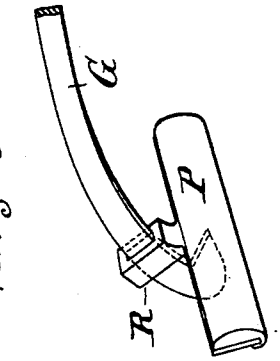

Fig. 6.

Fig. 4.

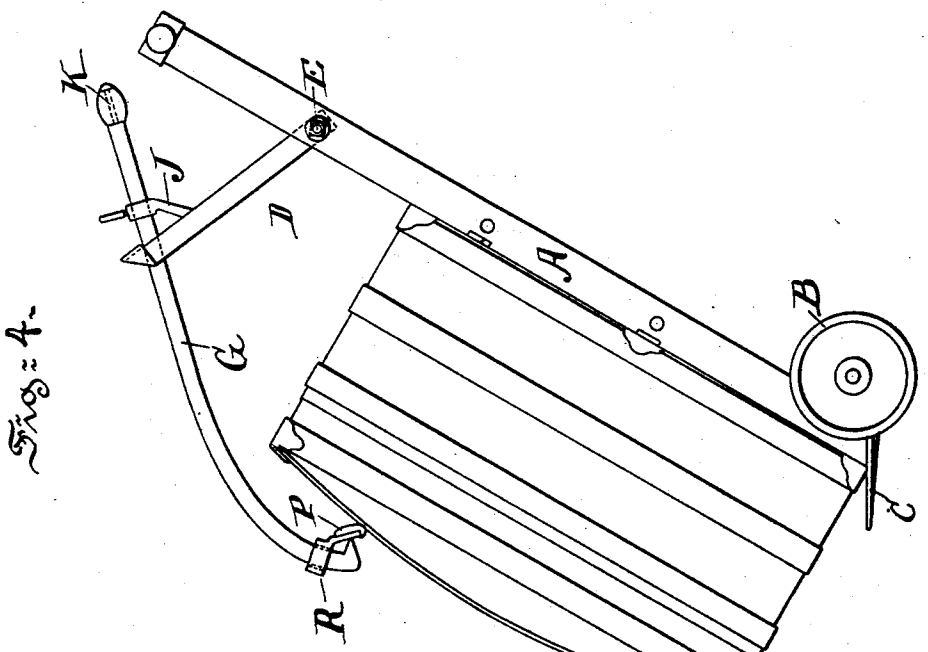

Witnesses:
W. A. Schaupp.
Wm R. Webster

Inventors.
Joseph H. Marvel
William H. Peirsol
by their attorney
Chas L. Butler

THE NORRIS PETERS CO., PHOTO-LITHO., WASHINGTON, D. C.

(No Model.) 3 Sheets—Sheet 3.

J. H. MARVEL & W. H. PEIRSOL.

TRUCK.

No. 590,437. Patented Sept. 21, 1897.

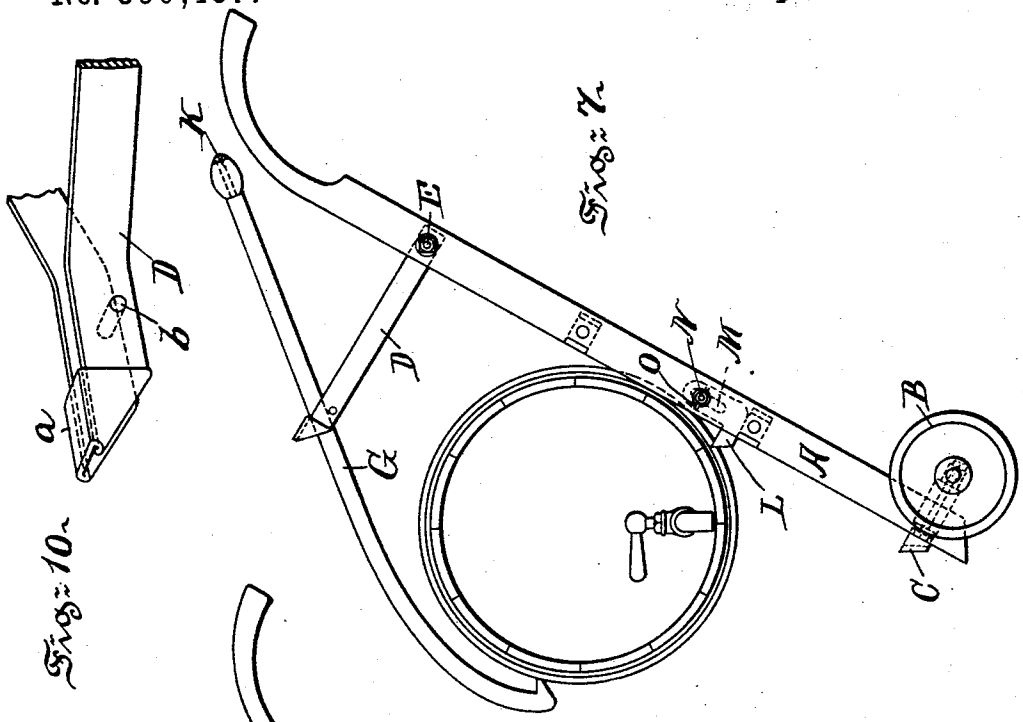

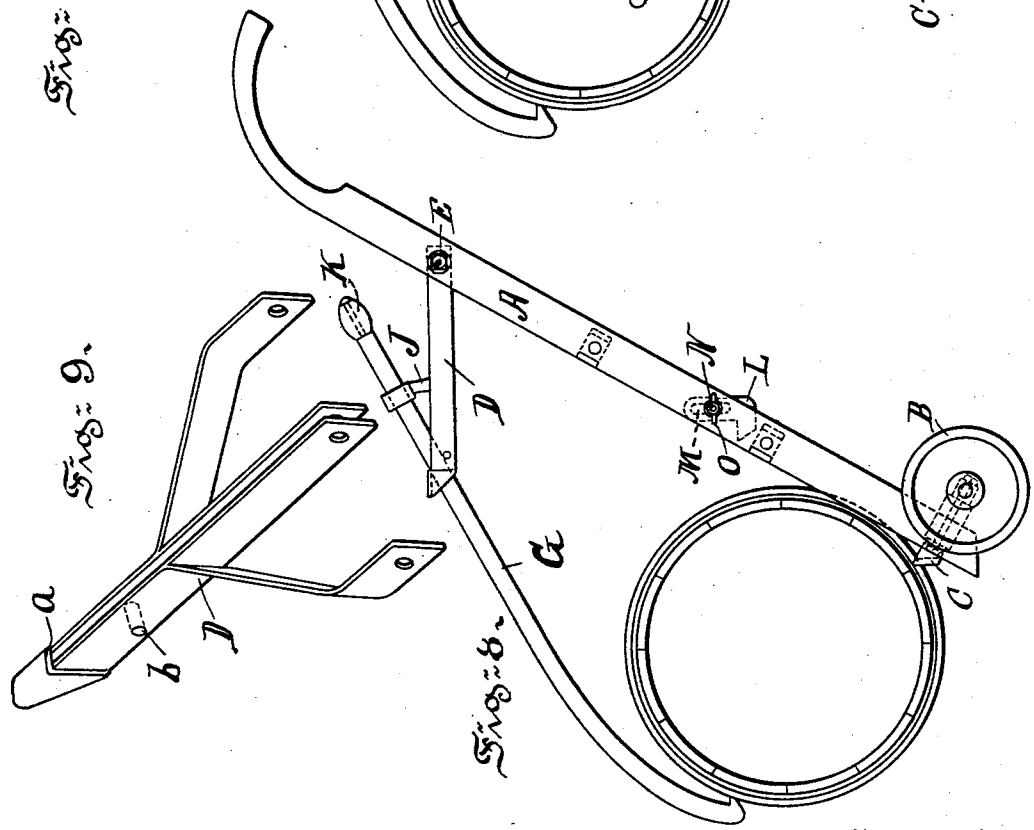

Witnesses:
W. A. Schaefer.
Wm R. Webster

Inventors:
Joseph H. Marvel
William H. Peirsol
by their attorney
Chas A. Potter.

THE NORRIS PETERS CO., PHOTO-LITHO., WASHINGTON, D. C.

UNITED STATES PATENT OFFICE.

JOSEPH H. MARVEL AND WILLIAM H. PEIRSOL, OF ATLANTIC CITY, NEW JERSEY.

TRUCK.

SPECIFICATION forming part of Letters Patent No. 590,437, dated September 21, 1897.

Application filed January 16, 1896. Serial No. 575,683. (No model.)

To all whom it may concern:

Be it known that we, JOSEPH H. MARVEL and WILLIAM H. PEIRSOL, citizens of the United States, and residents of Atlantic City, county of Atlantic, and State of New Jersey, have invented certain new and useful Improvements in Trucks, of which the following is a specification.

Our invention relates to improvements in trucks for handling and transporting packages, as barrels, boxes, or the like; and our invention consists in a novel arrangement of hook or grapple attached to the truck to assist in loading a package upon the same.

In the accompanying drawings, forming part of this specification and in which similar letters of reference indicate similar parts throughout the several views, Figure 1 is a perspective view of a truck fitted with our attachment, showing it in the act of loading a barrel thereon; Fig. 2, a transverse section through one of the side rails of the truck on line 1 2, Fig. 1; Fig. 3, a perspective view of one of the cleats or shoes on the bottom of truck; Fig. 4, a side elevation of truck lifting a trunk; Fig. 5, a perspective view of part of hook or grapple and device for covering point of same in order to prevent the point from tearing a trunk or other package; Fig. 6, a side elevation of truck in position to raise a barrel from the ground to about the center of the truck; Fig. 7, a similar view, the barrel being raised up to the center of the truck; Fig. 8, a side view of the truck, Figs. 6 and 7, showing a barrel upon its lower end; Fig. 9, a perspective view of rocking lever, Figs. 6, 7, and 8; and Fig. 10, a perspective view of the upper end of this lever.

A A are the side rails of a truck; B B, the wheels upon the forward end of the truck.

C are cleats or shoes carried by the forward end of the truck, which are preferably made of a flat piece of metal, the ends of which are bent upward at right angles, as best shown in Figs. 1 and 3, and which are secured to the truck by means of screws, bolts, or other suitable devices.

D is a rocking arm pivoted upon a rod or shaft E, which passes through the side rails A A. As these side rails are usually made of wood we preferably furnish them with a metal bushing F, Fig. 2, through which the shaft E passes in order to prevent wear.

G is a hook or grapple carried by the upper end of arm D. This hook or grapple may be furnished with holes H, Fig. 1, through which a pin I passes, and also through holes in the arm D, in order to secure it to said arm. J is a sliding dog carried by the inner end of the grapple-arm G. This dog is adapted to engage the arm D, so as to prevent the outer end of the grapple from being raised.

In operation the truck is brought up to the article to be placed upon it. The operator raises its rear end and advances its forward end until the cleats or shoes C engage the article to be lifted. The hook or grapple G and the arm D are now rocked forward, and the former is caused to engage the far end of the package. The sliding dog is now moved forward until its lower end engages the arm D, preventing any upward movement of the forward end of the hook. The operator now bears down upon the handles of the truck, and as he does so the package is lifted from the floor upon the truck.

Instead of the sliding-dog arrangement the arm D may be closed at one end, as shown best at *a*, Figs. 9 and 10, and furnished with a pin *b*, the grapple being placed between *a* and *b*, as shown in Figs. 4, 6, 7, and 8. The distance between the pin *b* and the end *a* of the frame D is somewhat greater than the width of the grapple. Therefore the grapple may be moved back and forth at will in order that its hook may be adjusted to engage packages of different sizes; but when the end of the grapple is in engagement with the package to be lifted it is canted, as shown, the upper side binding against the end *a*, the lower against the pin *b*. This securely locks the grapple and prevents it from having any movement so long as it is under the strain of holding the package.

When it is desired to unload the package from the truck, the inner end of the grapple, which is preferably furnished with a knob or handle K, is grasped and lowered, raising the forward or hook end out of contact with the package. If the grapple be furnished with

the sliding dog, this dog has to be moved out of contact with the arm D before the grapple can be operated, as above described.

The dog J may be used in connection with the grapple-jamming device illustrated in Figs. 4, 6, 7, and 8, if desired, although its use is not obligatory with this device.

When the sliding dog is used, we prefer to construct the arm D as shown in Fig. 1—that is, of a single piece of metal bent substantially in an M shape, the shaft E passing through the lower part of the arm four times, as shown, and the grapple G between the insides of the central folds of the arm. The dog J is adapted to bear against the edges of the central parts of the arm.

When the jamming device is used, we prefer to form the upper bearing *a* by folding over the central pieces of the arm D, as shown in Figs. 8 and 10.

L, Figs. 1, 6, 7, and 8, are catches which are furnished with slots M, through which bolts N pass, which also pass through the side bars A A of the truck.

O are nuts by means of which the bolts N may be operated to draw the catches firmly against the side bars A.

By setting the catches L out, as shown in Figs. 6 and 7, and inclining the truck forward, as shown in Fig. 6, a barrel or other package may be engaged by the catches L and the grapple G, the truck then rocked backward, and the package raised upon the truck, as shown in Fig. 7, from which elevation it may be deposited upon a shelf or platform of an equal height from the floor where it originally was placed.

In Figs. 4 and 5 we show an attachment with which we cover the hook end of the grapple when we handle trunks or other articles which might be injured by the sharp hook. This attachment consists of a sleeve R, which is adapted to be carried by the grapple G and a palm P, the face of which is preferably covered with wood, rubber, or some other suitable material which will bind against the trunk or other article to be lifted.

By means of our locking devices the swinging arm D and the grapple G are, when locked together, for all practical purposes a single piece pivoted to the shaft E. By means of the arm D we are able to obtain a greater reach of the grapple than would be possible without this arm and we are also able to lift a larger and higher article than would be possible without it.

Our attachment may readily be applied to any of the hand-trucks of the kind substantially as illustrated at present in use.

When our attachment is not in use, it may be dropped down entirely out of the way, so that the truck may be used as it would were it not furnished with our device.

Having thus described our invention, we claim—

1. The combination with a truck, substantially as illustrated, of a swinging arm pivoted at its lower end, a hook or grapple carried by the upper end of said arm and capable of being vertically rocked thereon, and means whereby said grapple will be locked to said arm and prevented from rocking when said grapple is in operation.

2. The combination with a truck, substantially as illustrated, of a swinging arm pivoted at its lower end, a grapple pivoted to the upper part of said arm, and a sliding dog carried by the inner end of said grapple adapted to engage said swinging arm to prevent said grapple from turning upon its pivot, substantially as and for the purposes set forth.

3. The combination with a truck of a swinging arm pivoted at its lower end, an arm forming a grapple pivotally carried by the upper end of said swinging arm, means for locking said grapple to said swinging arm, and catches carried by the sides of said truck adapted to be thrown into or out of operative position substantially as described.

JOSEPH H. MARVEL.
WILLIAM H. PEIRSOL.

Witnesses:
JAS. H. MASON, Jr.,
WILLIAM T. LECK.