May 13, 1924. 1,493,675

G. IMMAND

SELF DISCHARGING CAR

Filed Jan. 10, 1923 3 Sheets-Sheet 1

Fig. 1.

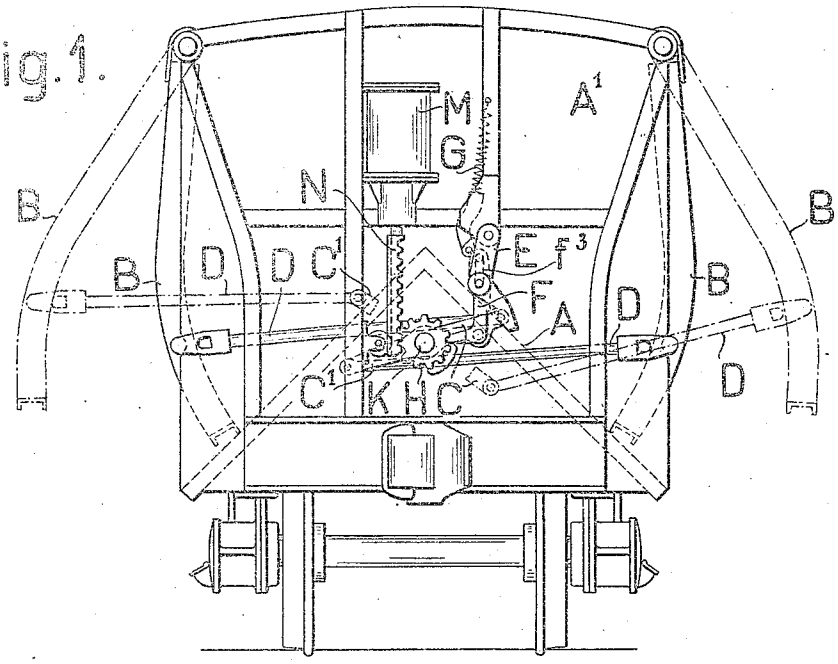

Fig. 2.

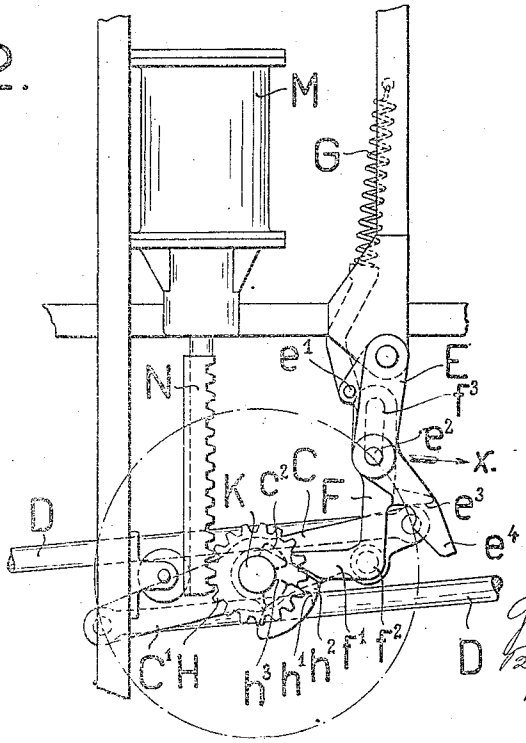

Inventor:
Gerhard Immand
By Kenyon & Kenyon
Attys

May 13, 1924. 1,493,675

G. IMMAND

SELF DISCHARGING CAR

Filed Jan. 10, 1923 3 Sheets-Sheet 2

Fig. 3.

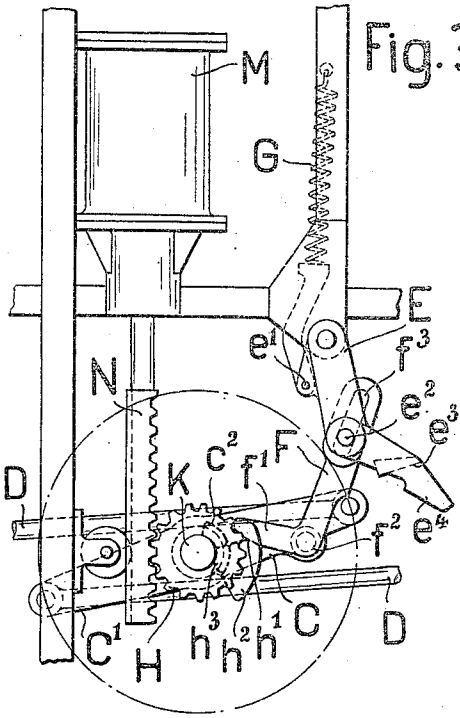

Fig. 4.

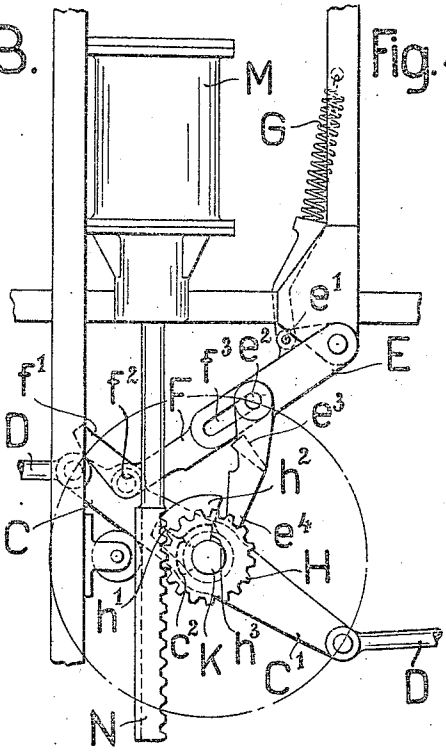

Fig. 5.

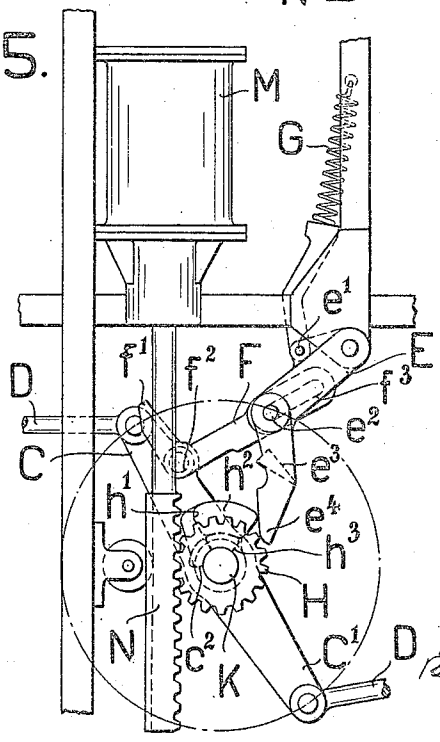

Inventor:
Gerhard Immand
By Kenyon & Kenyon
Attys

May 13, 1924. 1,493,675

G. IMMAND

SELF DISCHARGING CAR

Filed Jan. 10, 1923 3 Sheets-Sheet 3

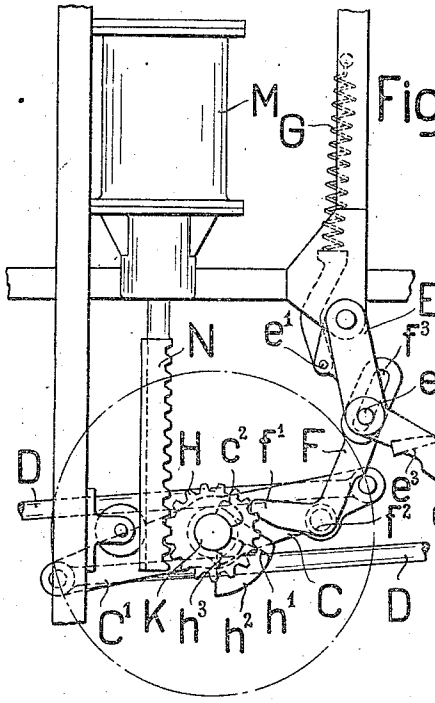

Fig. 6.

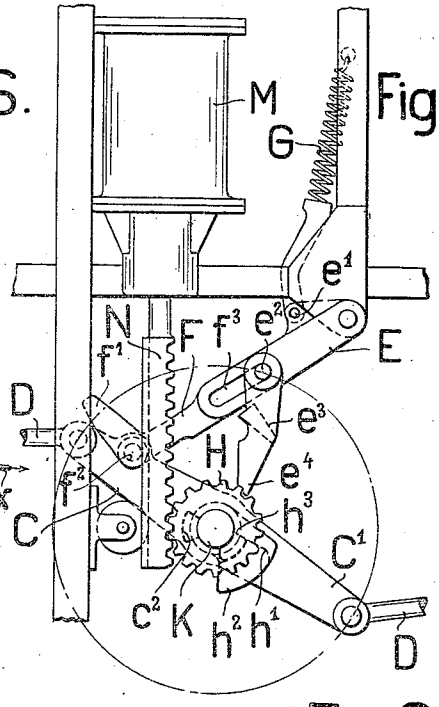

Fig. 7.

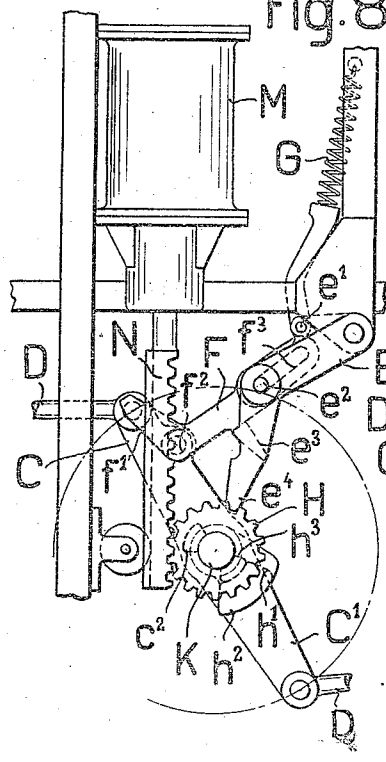

Fig. 8.

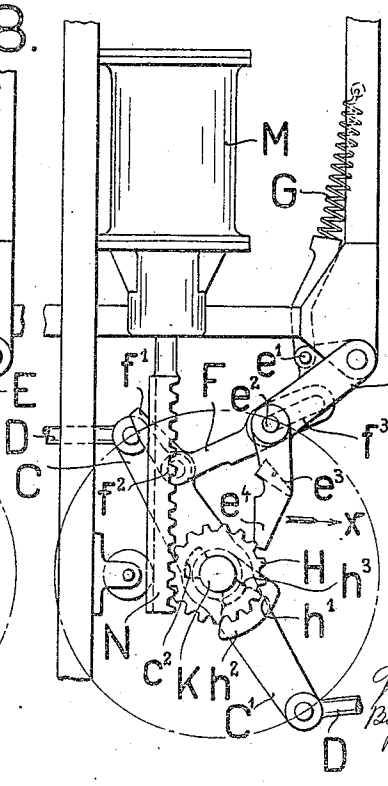

Fig. 9.

Inventor:
Gerard Immand
By Knight Bros
Attys

Patented May 13, 1924. 1,493,675

UNITED STATES PATENT OFFICE.

GERHARD IMMAND, OF ESSEN, GERMANY, ASSIGNOR TO FRIED. KRUPP AKTIEN-GESELLSCHAFT, OF ESSEN-ON-THE-RUHR, GERMANY.

SELF-DISCHARGING CAR.

Application filed January 10, 1923. Serial No. 611,899.

To all whom it may concern:

Be it known that I, GERHARD IMMAND, residing at Essen, Germany, a citizen of the German Republic, have invented a certain new and useful Improvement in Self-Discharging Cars, of which the following is a specification.

This invention relates to self-discharging cars of the kind comprising discharging flaps automatically moving into open position under the action of the weight of the load and into closed position under the action of their own weight, and it has more particularly reference to self-discharging cars of the character described and shown in the Letters-Patent of the United States No. 1,429,056 of 12th September, 1922, according to which patent means are provided for locking the discharging flaps in closed and open position against any unintentional movement.

The present invention has for its object to provide a self-discharging car of the character stated in which the means for locking the discharging flap in closed and open position are released by the aid of a driving element actuated by compressed air or the like without interfering with the possibility of directly operating the flap by hand.

The accompanying drawing illustrates, as an embodiment of the subject matter of the invention, a self-discharging car comprising a saddle-shaped bottom and two side-walls swingingly suspended at their upper edge and forming each a discharging flap.

Fig. 1 a total view of the parts of the discharging car that come into question.

Figs. 2 to 5 are views illustrating the means for operating the flaps by compressed air, and

Figs. 6 to 9 are views illustrating the means for operating the flaps by hand.

A designates the saddle shaped bottom which is rigidly connected to the underframe of the car, A^1 are the end walls which are likewise in rigid connection with the underframe, and B designates the two side walls which are swingingly suspended at the upper edge on the end walls A^1 and which form each a discharging flap. Mounted underneath the saddle shaped bottom A is a shaft K each end of which carries a double-armed lever, one arm of which is denoted by C and the other by C^1. The arms C and C^1 are connected by rods D to the side walls B. One arm C of the two levers C C^1 forms together with a crank arm E mounted on the underframe of the car, and with a coupling rod F connecting the crank arm E with the arm C, a double crank gear, the crank arms E and C of which have two positions of reverse. The coupling rod F is provided with an oblong slot f^3 which is engaged by the crank pin e^2 establishing connection between the crank arm E and the coupling rod F. When the discharging flaps formed by the side walls are in the closed position (Figs. 1 and 2), the crank arm E, which is under the action of a spring G connected to a stud e^1 of the crank arm E, will assume an angular position with relation to the coupling rod F, in which position it has passed beyond its dead position by a small angle in a direction opposite to the arrow x (see particularly Fig. 2) and will bear, by means of a stop e^3 formed at one side of the crank arm E, against the coupling rod F in such a manner as to prevent a further rotation in the direction opposite to the arrow x. The spring G holds the stop e^3 in force-closed engagement with the coupling rod F. At the same time, the pin e^2 of the crank arm E will bear against the coupling rod F at the inner end of the slot f^3. The shaft K carries a driven element formed by a toothed pinion H which is in mesh with a rack bar N which, in turn, is connected to the piston of a compressed air cylinder M. When the pinion H is rotated by the rack bar N in counter-clockwise direction, a stop h^1 of the pinion H will strike against an angular bent extension f^1 of the coupling rod F (see Fig. 3) and cause the link support E F to collapse. When the levers C C^1 are rotated, another stop h^2 of the pinion H will prevent the link supports from moving into the dead position before the pinion H has rotated by a corresponding amount, the said stop h^2 clearing the path of a stop e^4 of the crank arm E for moving into the dead position no sooner than it has completely moved out of the path of the stop e^4, this being shown in Fig. 4. On the other hand, when the pinion returns from the open position (Fig. 5), the stop h^2 will cause the collapse of the link supports by moving the stop e^4 of the crank arm E in counter-clockwise direction. A third stop h^3 of the

pinion H is adapted to enter into engagement with a stop c^2 of the lever C C^1, these two stops will cause the flaps to be kept open when working with compressed air without preventing the free rotation of the levers C C^1 when operating the flaps manually, and they will allow the collapse of the link supports when blowing-off the compressed air from the cylinder M.

When the discharging flaps B are in the closed position, illustrated in Figs. 1 and 2, the load of the car exerts forces on the flaps, which forces are transmitted through the intermediary of the rods D to each lever C C^1 in such a manner that the coupling rod F will bear with pressure against the pin e^2 of the crank arm E. The coupling rod will thus exert in its longitudinal direction a force on the crank arm E, which force tends to impart to the latter a rotation in a direction opposite to the arrow x. This rotation is, however, prevented by the stop e^3 abutting against the coupling rod F. The flaps B are therefore secured in their closed position in a self-locking manner by the pressure of the load.

When the car should be discharged by means of compressed air, the pinion H will be rotated through the intermediary of the rack bar N in counter-clockwise direction, the cam h^1 of the pinion H striking against the extension f^1 of the coupling rod F and turning the same in clockwise direction around its axis of rotation f^2. The crank arm E is thereby caused to positively pass beyond its dead position by a further amount, and as soon as this has taken place it will continue its rotation independently of the pinion H in the direction of the arrow x under the action of the forces exerted by the pressure of the load, whereupon it will change its direction while the levers C C^1 are further rotating in counter-clockwise direction at a lead with relation to the pinion H. The crank arm E will execute this reverse in a position situated between the positions according to Figs. 3 and 4, and it will finally reach its second dead position (Fig. 4) when the pinion H will have been moved, in the meantime, by compressed air by an amount such as to cause the stop h^2 of the pinion H to clear the path for the stop e^4 of the crank arm E. If the flaps B should not tend to open automatically, such as for instance in case a moist load should have got frozen, the stop h^3 of the pinion H will, upon unlocking the link support E F, enter into engagement with the stop c^2 of the lever C C^1 and carry the lever C C^1 along with it, so that the flaps will be opened. The stops h^3 of the pinion H and c^2 of the lever C C^1, by their relative engagement, will hold the flaps B in wide-open position and the levers and link supports in the position illustrated by Fig. 4.

For the purpose of returning the flaps B into the closed position, the cylinder M is emptied from the compressed air. The weight of the flaps will then rotate the lever C C^1 and return the pinion H in clockwise direction through the intermediary of the stops c^2 and h^3. When this takes place the stop h^2 of the pinion H will strike against the stop e^4 of the crank arm E and move the same around its fulcrum in counter-clockwise direction. During this movement, the crank pin e^2 will glide in the slot f^3 of the coupling rod F until it will abut against the lower end of the said slot.

At that moment, the crank arm E has already passed beyond its dead position by a small amount. It will now further rotate positively together with the coupling rod F under the action of their own weight of the flaps in the direction of the arrow x, until it reaches its position of reverse. While the flaps approach to their closed position under the action of their own weight, the crank arm E will rotate beyond its first dead position and thus return into the position according to Figs. 1 and 2 which were mentioned when starting the description of the operation. The automatic passage of the crank arm beyond the dead position is again secured by the tension of the spring G which at the same time causes the stop e^3 to abut against the coupling rod F with force-closure during the return rotation of the crank arm E. When charging the car again, the pin e^2 of the crank arm E will again bear against the coupling rod F at the inner end of the slot f^3.

If the car should be discharged by hand instead of by compressed air, the crank arm E is rotated according to Fig. 6 in the direction of the arrow x by means of a manually moved pulling rod, not shown in the drawing, thereby causing the link support E F to be released as described before. The lever C C^1 is thereby permitted to rotate again in counter-clockwise direction under the action of the forces exerted by the pressure of the load, until it reaches the position shown in Fig. 7, without its stop c^2 contacting with the stop h^3 of the pinion H. The spring G will cause the crank arm E to pass beyond the dead position and the stop e^3 to abut against the coupling rod F, thus limiting the rotation of the crank arm E. After the crank arm E has reached its second dead position, the flaps B still continue their swinging movement in the opening direction by an amount corresponding to the length of the slot f^3 of the coupling rod F, and then they return into the position shown in Fig. 8 under the action of their own weight, in which position the pin e^2 of the crank arm E rests again on the coupling rod F at the inner end of the slot f^3. In this position (Fig. 8), the link supports E F prevent the

flaps from dropping into the closed position. In order to return the flaps into the closed position, the crank arm E is turned, by means of the corresponding pulling rod, from the position according to Fig. 8 in the direction of the arrow x according to Fig. 9, whereby the stop e^3 of the crank arm E is lifted from the coupling rod F and each lever C C^1 caused to execute, after a slight rotation in the counter-clockwise direction, a clockwise rotation. As soon as the crank arm E has passed beyond its dead position by a small amount, it will continue its rotation automatically under the action of the weight of the flaps, in the direction of the arrow x until it reaches the position of reverse. From this position, the crank arm will pass beyond its first dead position into the initial position shown in Figs. 1 and 2, while the flaps B continue to approach to their closed position under the action of their own weight. This last-mentioned movement of the crank arm will take place without the stops h^1 h^2 and h^3 of the pinion H having entered into engagement with the corresponding stops of the crank arm E of the coupling rod F and the lever C C^1, respectively. The automatic passage beyond the dead position of the crank arm E is, in this case too, caused by the spring G. The initial position, from which the description of the operation has been started, is thus reached again.

Claims:

1. In a self-discharging car, comprising a discharging flap adapted to move automatically in opening under the action of the pressure of the load and in closing under the action of its own weight, and a gear for locking the discharging flap in the open and closed position, a driving element, a driven element operated by said driving element and connected with said locking gear, releasing members on the driven element and releasing members on the locking gear, the releasing members of the driven element and those of the locking gear being adapted to co-operate with one another in certain angular positions of the driven element, for the purpose of releasing the discharging flap.

2. In a self-discharging car, comprising a discharging flap adapted to move automatically in opening under the action of the pressure of the load and in closing under the action of its own weight, and a crank gear, consisting of two crank arms, for locking the discharging flap in the open and closed position, a driving element, a driven element operated by said driving element and connected with said locking gear, the driven element carrying two stops adapted to act as releasing members, and the crank arms of the locking crank gear being provided each with a stop adapted to act as releasing members, one stop of the driven element being arranged to project, in the closed position, into the path of the stop of one crank arm, and the other stop of the driven element being arranged to project, in the open position, into the path of the stop of the other crank arm of the locking crank gear.

3. In a self-discharging car, comprising a discharging flap adapted to move automatically in opening under the action of the pressure of the load and in closing under the action of its own weight, and a crank gear, including two crank arms, for locking the discharging flap in the open and closed position, a driving element, a driven element operated by said driving element and connected with said locking gear, two stops on the driven element, said stops being adapted to act as releasing members, and a stop on each of the arms of the locking crank gear, the stops of the driven element being arranged for co-operation with the stops of the crank gear, and a third stop on the driven element adapted to couple the driven element with an actuating member which is in positive connection with the discharging flap.

4. In a self-discharging car, comprising a discharging flap adapted to move automatically in opening under the action of the pressure of the load and in closing under the action of its own weight, and a crank gear, consisting of two crank arms, for locking the discharging flap in the open and closed position, a driving element, a driven element operated by said driving element and connected with said locking gear, the driven element carrying two stops adapted to act as releasing members, and the crank arms of the locking crank gear being provided each with a stop adapted to act as releasing members, one stop of the driven element being arranged to project, in the closed position, into the path of the stop of one crank arm, and the other stop of the driven element being arranged to project, in the open position, into the path of the top of the other crank arm of the locking crank gear, the last-mentioned stop of the driven element being of a shape such as to be able to prevent any lead of the last-mentioned stop of the locking crank gear with relation to the driven element during the transition of the mechanism from the closed to the open position.

5. In a self-discharging car, comprising two discharging flaps adapted to move autotomatically in opening under the action of the pressure of the load and in closing under the action of their own weight, a shaft mounted on the car, double-armed levers carried by said shaft, connecting rods between the discharging flaps and the double-armed levers, and a crank gear for

locking the discharging flaps in the open and closed position, a driving element, a driven element operated by said driving element, said driven element being connected with said locking crank gear and mounted for free rotation on said shaft, releasing members on the driven element and releasing members on the locking crank gear, the releasing members of the driven element and those of the locking crank gear being adapted to cooperate with one another in certain angular position of the driven element, for the purpose of releasing the discharging flaps.

The foregoing specification signed at Köln, Germany, this 7th day of December, 1922.

GERHARD IMMAND.