A. C. THORSEN.

RAIL JOINT.

APPLICATION FILED MAY 15, 1912.

1,068,948.

Patented July 29, 1913.

Fig. 1.

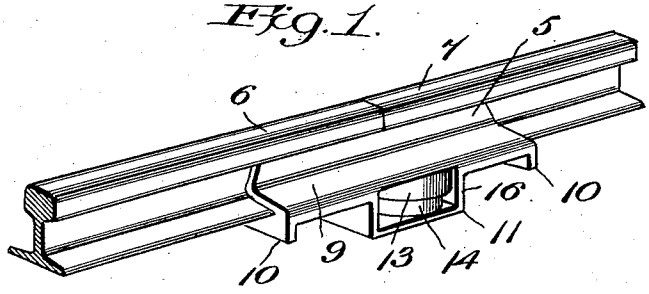

Fig. 2.

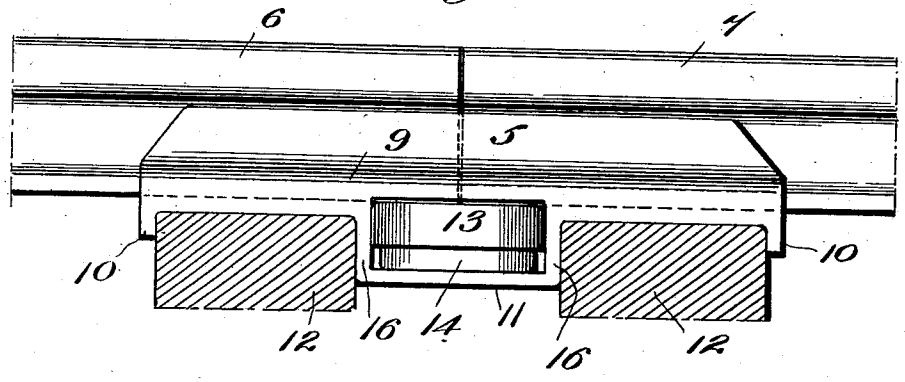

Fig. 3.

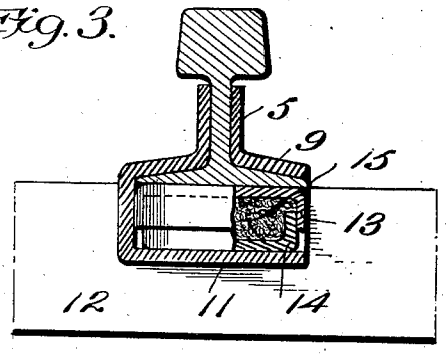

Fig. 4.

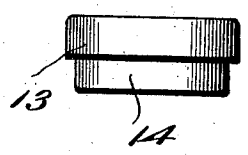

Witnesses

C. James Cronin

C. C. Kemper.

Inventor

Arthur C. Thorsen

By Victor J. Evans

Attorney

UNITED STATES PATENT OFFICE.

ARTHUR C. THORSEN, OF WEEHAWKEN, NEW JERSEY.

RAIL-JOINT.

1,068,948. Specification of Letters Patent. Patented July 29, 1913.

Application filed May 15, 1912. Serial No. 697,530.

To all whom it may concern:

Be it known that I, ARTHUR C. THORSEN, a citizen of the United States, residing at Weehawken, in the county of Hudson and State of New Jersey, have invented new and useful Improvements in Rail-Joints, of which the following is a specification.

This invention relates to rail joints and more especially to cushions at and supporting the two abutting ends of the rails to relieve the road of the consequent shock and jar as a train passes over the rails at that point, the cushion consisting of telescopic boxes inclosed within a chair and fish plates which are carried between the ties as will be more fully explained in the following specification, set forth in the claims and illustrated in the drawings, wherein;—

Figure 1 is a perspective view of the joint and the improvement applied thereto. Fig. 2 is a side elevation of the joint and cushion. Fig. 3 is a cross sectional view of the same. Fig. 4 is a side view of the cushion.

The device shown in the drawings is adapted to prevent the dropping of the end of a rail at the joint as a wheel passes over the same which not only injures the wheel but wears off the end corner of the rail, causing a constant thumping on the car as it moves over the track.

The invention consists of the fish plates 5 embracing the joint and extending any desired length along the ends of the rails 6 and 7 to which it may be secured by the bolts if found necessary. The fish plates form the upper portions of a chair 9 passing around and under the flanges of the rails and having end flanges 10 and a centrally disposed housing 11, the flanges and side walls of the housing being adapted to receive between them the ties 12.

The housing 11 is designed to contain a cushion comprising the telescopic cups 13 and 14 containing the cotton, wool or similar packing 15. This housing for the cushion also comprises the side walls 16, which abut against the adjacent ties 12 and assist in holding the chair 9 firmly in place and against longitudinal movement. Other attaching means may be employed such as spikes on each side of the chair, to prevent the outward movement of the chair and rails, thus firmly anchoring the chair to the tie, and tie rods may connect the rails on each side of the track to properly space them.

This device thus firmly locks the rails against movement and dislocation and secures the rail to the tie, and cushions the joint against the injury which results from the heavy work imposed upon rail roads. The chair and fish plates also protect the flanges and web of the rails and the dislocation of either rail is prevented to a large degree by this secure joint.

It is obvious that the parts may be modified and otherwise arranged without departing from the essential features above described.

What I claim as new is:—

1. In a rail joint, the combination with railroad ties and rails; of a chair having its upper side portions forming fish-plates, the said chair being provided with a central downwardly extending portion forming a pocket, the said chair being further provided with downwardly projecting ends, the said ends being in spaced relation to the pocket and forming with the pocket a socket to fit the tie, and a cushion fitted in the pocket and supporting the abutting ends of the rails substantially as described.

2. In a rail joint, the combination with railroad ties and rails; of a chair having its upper side portions forming fish-plates, the said chair being provided with a central downwardly extending portion forming a pocket, the said chair being further provided with downwardly extending ends, the said ends being in spaced relation to the pocket and forming with the pocket a socket to fit the tie, and a cushion comprising a telescope cup fitted within the pocket and resilient packing fitted within the cup for the purposes set forth.

In testimony whereof I affix my signature in presence of two witnesses.

ARTHUR C. THORSEN.

Witnesses:
C. JAMES CRONIN,
GEO. A. BYRNE.

Copies of this patent may be obtained for five cents each, by addressing the "Commissioner of Patents, Washington, D. C."