Aug. 11, 1936. F. X. MALOCSAY 2,050,711

CIGAR MACHINE

Filed April 1, 1931 5 Sheets-Sheet 1

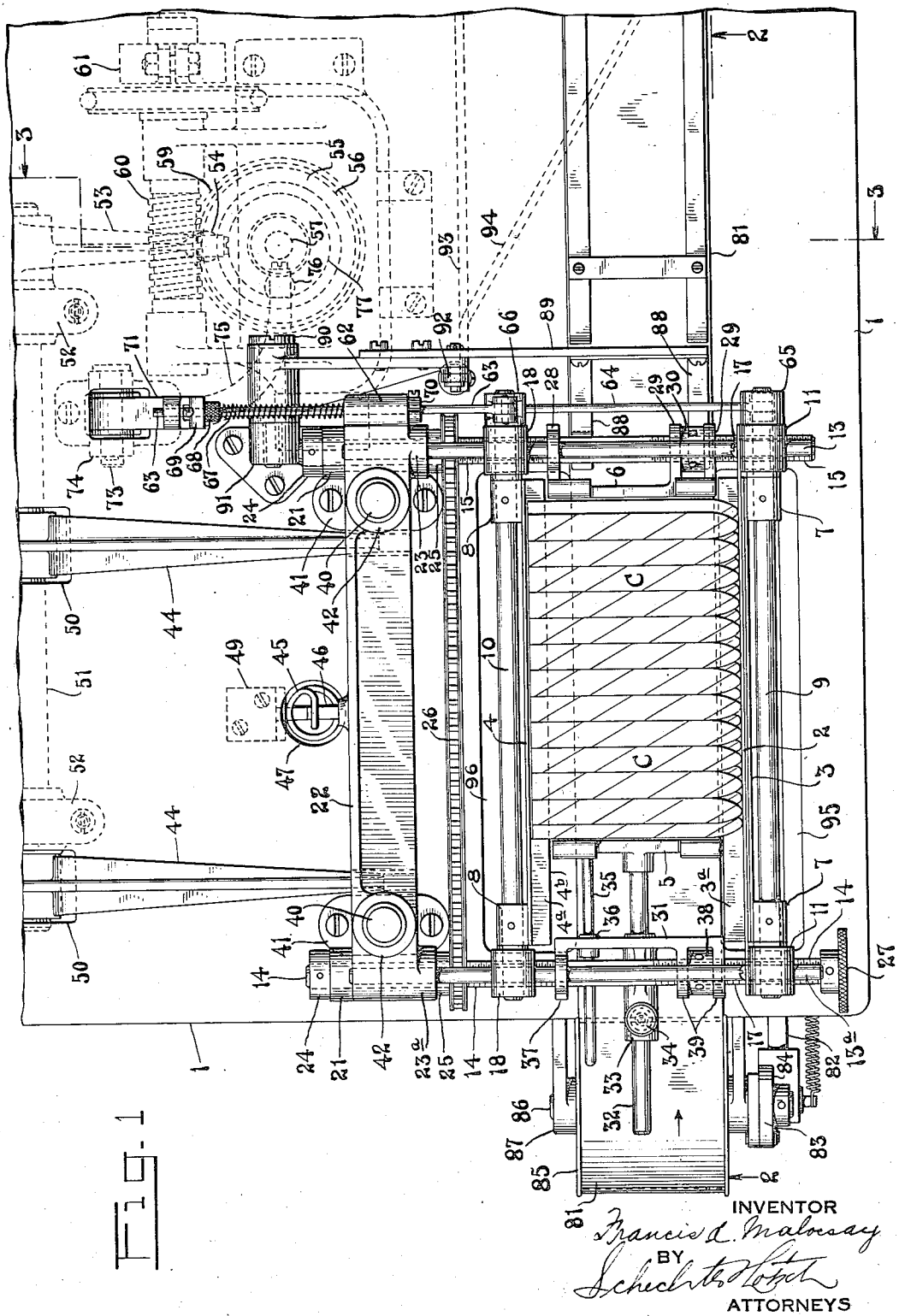

Fig. 1

INVENTOR
Francis X. Malocsay
BY
Schechter & Hotsch
ATTORNEYS

Aug. 11, 1936. F. X. MALOCSAY 2,050,711

CIGAR MACHINE

Filed April 1, 1931 5 Sheets-Sheet 2

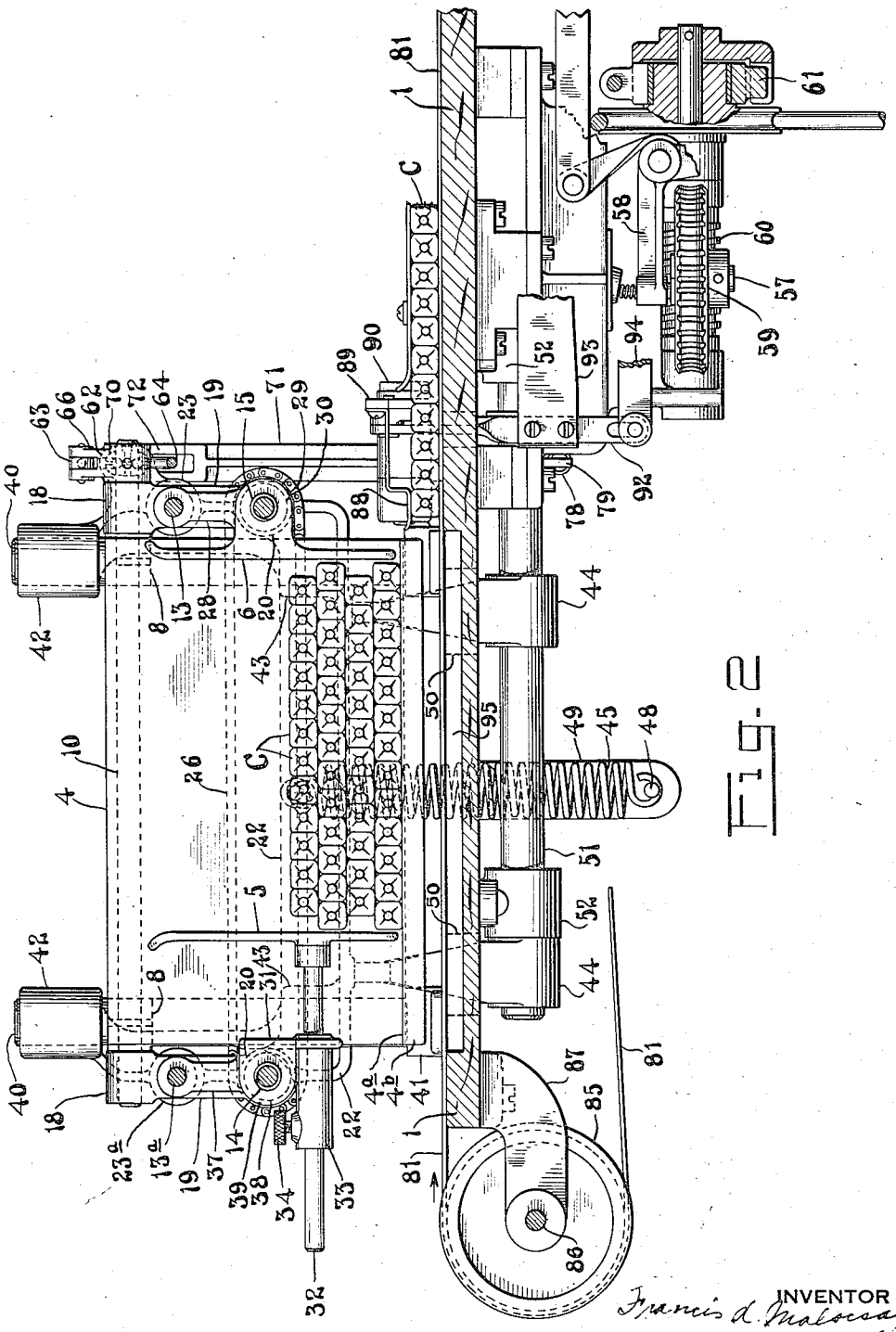

Fig. 2

INVENTOR
Francis X. Malocsay
BY
Schechter & Lotsch
his ATTORNEYS

Aug. 11, 1936. F. X. MALOCSAY 2,050,711

CIGAR MACHINE

Filed April 1, 1931 5 Sheets-Sheet 3

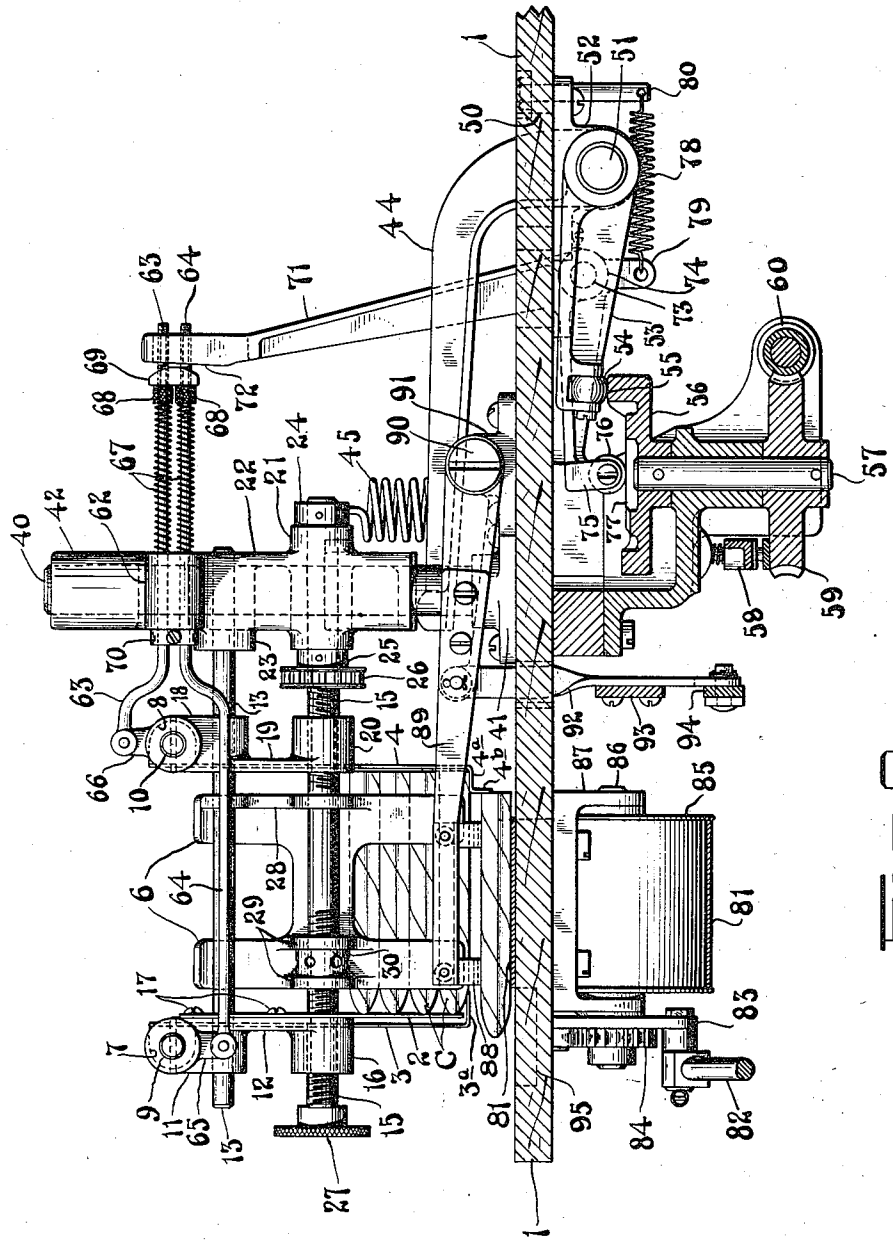

Fig. 3

INVENTOR
Francis X. Malocsay
BY
Schlitz & Lobato
his ATTORNEYS

Aug. 11, 1936. F. X. MALOCSAY 2,050,711

CIGAR MACHINE

Filed April 1, 1931 5 Sheets-Sheet 4

Fig. 6

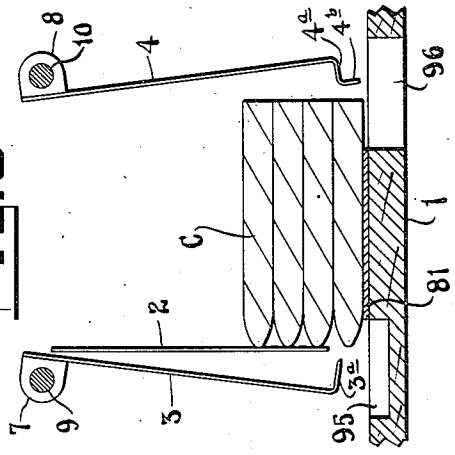

Fig. 5

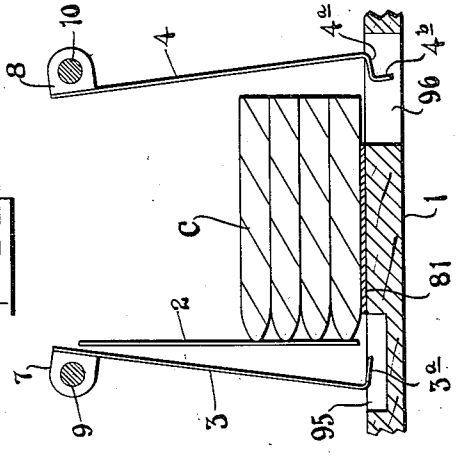

Fig. 4

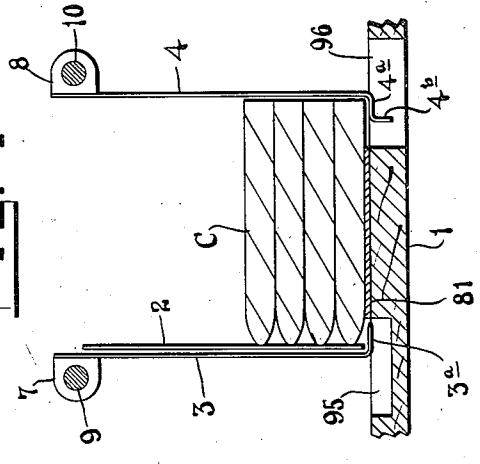

Fig. 8

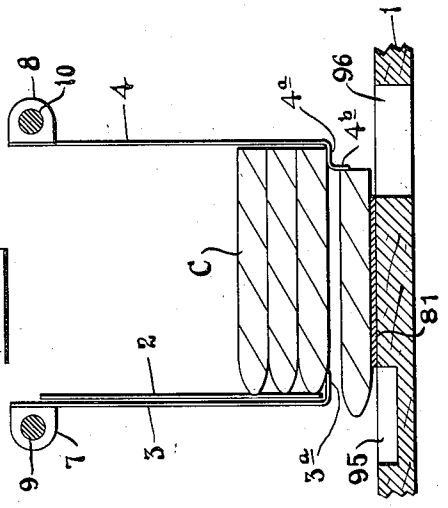

Fig. 7

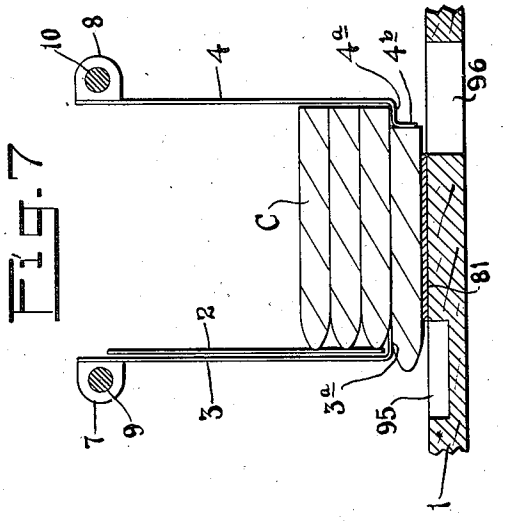

Francis X. Malocsay INVENTOR

BY Scheinbaum & Lotsch

his ATTORNEYS

Aug. 11, 1936. F. X. MALOCSAY 2,050,711

CIGAR MACHINE

Filed April 1, 1931 5 Sheets-Sheet 5

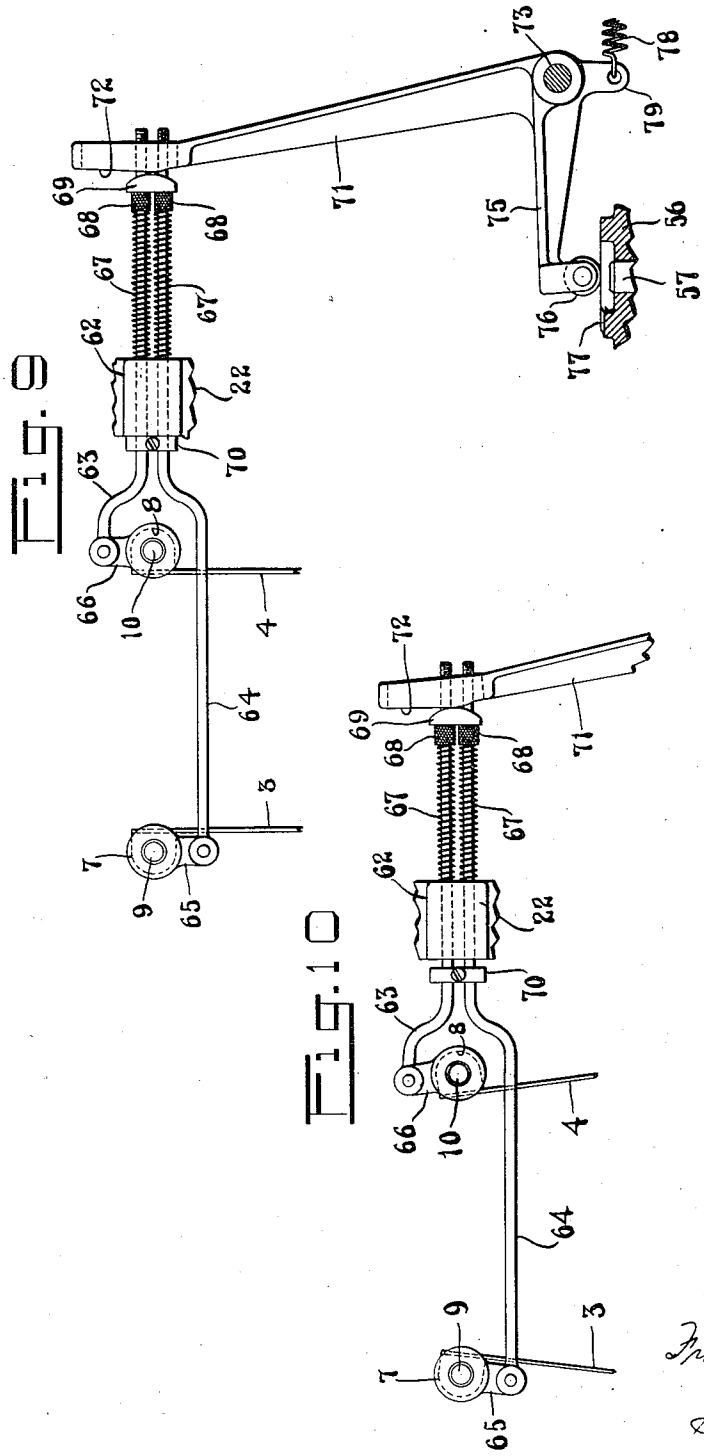

Fig. 9

Fig. 10

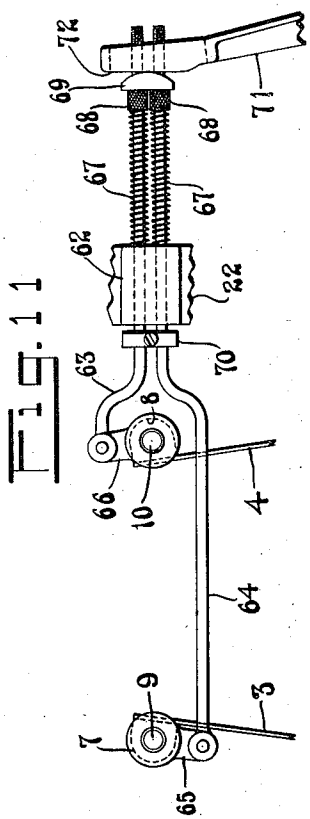

Fig. 11

INVENTOR
Francis X. Malocsay
BY
Schlechter & Lobit
his ATTORNEYS

Patented Aug. 11, 1936 2,050,711

UNITED STATES PATENT OFFICE

2,050,711

CIGAR MACHINE

Francis X. Malocsay, Upper Saddle River, N. J., assignor, by mesne assignments, to Consolidated International Corporation, a corporation of New York

Application April 1, 1931, Serial No. 526,788

7 Claims. (Cl. 131—39)

It is among the general objects of the present invention to provide an automatic hopper feed mechanism for cigars which will deposit cigars upon a conveyor, and in which hopper the mechanism will synchronize with the respective actions of the conveyor and a cigar banding or wrapping mechanism.

Another object of the invention is to provide a cigar handling mechanism which will retain the cigars in proper conformation and deposit them in rows from a stack upon a conveyor.

Another object of the invention is to provide a cigar handling mechanism which is capable of adjustment to receive and deposit rows of cigars of various shapes and sizes upon a conveyor, and which is also adjustable to receive and deposit rows of cigars varying in the number of individual cigars upon said conveyor.

A further object of the invention is to provide a wholly coordinated and combined assembly which will automatically deposit a row of cigars upon a conveyor after the last cigar of the previously deposited row has been discharged to a cooperating mechanism.

A further object of the invention is to provide a cigar handling or hopper mechanism which is capable of being lowered and raised and which, when lowered will deposit a row of cigars upon a conveyor, and when raised will support the remainder of the stack until the last cigar of the deposited row passes from underneath it; when it will automatically lower again to deposit another row of cigars.

Other more specific objects and advantages of the apparatus will appear as the nature of the improvements is better understood, the invention consisting substantially in the novel arrangement and corelation of instrumentalities herein fully described and illustrated in the accompanying drawings wherein similar reference characters are used to describe corresponding parts throughout the several views and then finally pointed out and specifically defined and indicated in the appended claims.

The disclosure made the basis of exemplifying the present inventive concept suggests a practical embodiment thereof, but the invention is not to be restricted to the exact details of this disclosure, and the latter, therefore, is to be understood from an illustrative, rather than a restrictive standpoint. It will be understood that the various features of the invention may be separately applicable despite their cooperation herein shown.

The invention is adapted to be used in connection with a banding machine which is not illustrated in the drawings but which was broken away at the right hand sides of Figures 1 and 2, but which is fully described and illustrated in my Patent No. 1,261,832, dated April 9th, 1918; or the invention may be used in connection with a cigar wrapping mechanism which is fully described and illustrated in my application filed November 29th, 1930, Serial Number 498,992.

In the embodiment of the invention as herein disclosed there is provided a hopper in which rows of cigars may be placed to form a stack which is supported on inwardly projecting ledges or flanges which are a part of the front and rear walls or plates of the hopper. These front and rear plates are adjustably mounted so that the distance between them may be increased or decreased to accommodate cigars of various lengths, and they are also pivotly hung in their adjustable mountings so that they can be swung outward and away from the stack of cigars. The hopper is slidably mounted and is automatically lowered toward a conveyor belt which passes directly underneath it, the belt moving with a stop and start motion. The downward movement of the hopper brings the lowermost row of cigars of the stack into contact with the conveyor during one of its stop periods; at which time the front and rear plates are swung outward to clear the ends of the cigars. The hopper then moves upward a distance equal to the height of one cigar, and the plates then swing inward to their normal positions. This causes the inwardly extending flanges on the bottom of the plates to pass under the lower surface of the succeeding row of cigars. With the plates in this position, the hopper again moves upward supporting the remainder of the stack on the plate flanges. This final upward movement of the hopper leaves the original bottom row of cigars deposited upon the conveyor with a clearance above them, and free to move with the conveyor which starts to move again at this point.

Feeler fingers are provided under which the cigars must pass. As the last cigar of the deposited row passes thereunder, the fingers drop. This causes a clutch mechanism to be released to rotate a pair of concentric cam surfaces, which operate a combination of levers that lower and raise the hopper, and swing the front and rear walls away from and back into position again as already described herein. The clutch control is not dependent upon the number of cigars in a row or the fact that some may have been removed. The surface speed of the conveyor is slightly greater than is necessary to feed the

cigars to a cooperating banding or wrapping mechanism or a combination of both, and it is because of this, that any space between the individual cigars is gradually eliminated, and the cigars kept in close contact with one another as they approach the banding or wrapping mechanism, a slight slippage being caused at this point between the cigars and the conveyor to insure their close contact.

The clutch is also controlled by means associated with the band or wrapper supply or both when used in tandem in such a manner as to stop the hopper feed upon failure of either supply.

In connection with the features hereinafter specifically pointed out, it will be understood that the invention is also concerned with the specific mechanical means by which the advantageous functions are achieved, which features combine, cooperate and interrelate in synchronous manner to provide a wholly automatic, simple, inexpensive, rugged and durable apparatus.

The inventive idea involved is capable of receiving a variety of mechanical expressions, one of which for the purpose of illustration is shown in the accompanying drawings, in which—

Fig. 1 is a top plan view of my improved cigar hopper;

Fig. 2 is a sectional view taken on line 2—2 of Fig. 1;

Fig. 3 is a sectional view taken on line 3—3 of Fig. 1;

Fig. 4 is a detailed view illustrating the lowermost position of the front and rear cigar supporting hopper plates after having deposited the stack of cigars upon the conveyor belt;

Fig. 5 is a similar view showing the front and rear hopper plates swung outward to clear cigar stack;

Fig. 6 illustrates the hopper plates in their outward position as illustrated in Fig. 5 after having been moved upward a distance equal to the height of a row of cigars;

Fig. 7 illustrates the hopper plates after they have been swung inward upon their reaching the position illustrated in Fig. 6;

Fig. 8 illustrates the hopper plates in their normal position; supporting the remainder of the cigar stack and leaving the bottom row of cigars free upon the conveyor belt;

Fig. 9 is a detailed view illustrating the position of the operating mechanism for the front and rear cigar supporting hopper plates when the plates are in the position illustrated in Fig. 4;

Fig. 10 is a similar view illustrating the position of the plate operating mechanism when the plates are in the position illustrated in Fig. 5; and

Figure 11 is another view of the plate operating mechanism illustrating their position with the plates in the raised position illustrated in Fig. 6.

With particular reference to Figures 1, 2 and 3, numeral 1 represents a table upon which my hopper is mounted and which is broken away at the right hand side. The continuation of the table at the right hand side leads to cooperating banding or wrapping mechanisms which are not shown but which support said table and supply the power to drive the hopper mechanism illustrated in the drawings.

The hopper in general is defined by the front aligning plate 2, the front swinging plate 3 having the inwardly attending flange 3a, the rear swinging plate 4, having the inwardly extending ledge 4a and the downwardly extending flange 4b, the left hand adjustable side frame 5, and the right hand side frame 6. The front and rear swinging plates 3 and 4 have securely fastened to their upper corners the supporting blocks 7—7 and 8—8 respectively. The blocks 7—7 are pinned on the shaft 9 and the blocks 8—8 are pinned on the shaft 10. The shaft 9 is pivotally mounted at its extremities in the bosses 11—11 of the front plate supporting brackets 12—12 which are slidably mounted on the rods 13 and 13a, and threaded on the right and left hand threaded screw shafts 14 and 15 at 16—16. The front aligning plate 2 is fastened to the inner surfaces of the supporting brackets 12—12 by means of the screws 17, (see Figs. 1 and 3) and are drilled to allow the rods 13 and the screw shafts 14 and 15 to pass through it. The shaft 10 is pivotally mounted at its extremities in the bosses 18—18 of the rear plate supporting brackets 19—19 which are also slidably mounted on the rods 13—13 and threaded on the screw shafts 14 and 15 at 20—20. The rear ends of the screw shafts 14 and 15 are rotatably mounted in the bearings 21—21 which are a part of the main hopper supporting frame 22, and the rods 13 and 13a are secured in the bosses 23 and 23a respectively of the supporting frame. The screw shafts 14 and 15 are retained in position in their bearings 21 by the collars 24—24 and the sprockets 25—25, both of which are pinned in position upon the shafts, which is most clearly illustrated in Fig. 3. The sprockets 25—25 are of like pitch diameters and are connected to each other by the chain 26. Upon the front end of the screw shaft 14 I have provided a knurled band wheel 27; which when rotated, causes both screw shafts to revolve through the medium of the chain and sprockets, and with the use of the right and left hand threads at opposite ends of the screw shafts, the end plates can be adjusted in a simple manner and yet remain parallel.

Interposed between the aligning plate 2 and the rear plate 4, and adjustably mounted on the screw shaft 15 is the end frame 6. Referring to Fig. 3 it will be seen that this frame is in the form of an H; and is held in its perpendicular position by the integral upward extending arm 28 through the top of which passes the rod 13. The rod passes through the arm with a sliding fit as likewise does the screw shaft 15 pass through the lower end of the arm. At the left hand side of the frame 6 are the two lugs 29—29 through which the screw shaft 15 also passes with a sliding fit; but interposed between them and on the shaft is the capstan nut 30; the purpose of which is for adjustment of the frame when the front and rear plates are moved.

The adjustable end frame 5 is also of H construction and is supported in the bracket 31 by means of its adjusting rod 32 which is slidably mounted in the bearing 33 integral with the underside of the bracket. (See Figs. 1 and 2.) The thumb screw 34 prevents the end frame from moving after it has been adjusted. The rod 35 prevents the end frame from turning on the axis of the rod 32 by being slidably mounted in the bracket 31 at 36. The bracket 31 has integral with it the upward extending arm 37 which retains the end frame 5 in its perpendicular position by being slidably mounted on the rod 13a and the screw shaft 14, and is adjusted by the capstan nut 38 interposed between the lugs 39—39.

The main hopper supporting frame 22 is free to slide upon the perpendicular guide bars 40—40 which are held in position on the table 1 by means of the flanged supports 41—41. The guide bars have for their bearings the integral bosses

42—42 at the top of the supporting frame, and the bosses 43—43 located at the bottom of the frame. This supporting frame is caused to move up and down by the action of the levers 44—44 which bear against the under surface of the frame; and this contact between the levers and the frame is insured by the tension spring 45. This spring is secured at its upper end to the frame by the pin 46 and passes downward through an aperture 47 in the table 1. The lower end of the spring is hooked over the pin 48 (see Fig. 2) carried by the angle bracket 49 which is secured to the under surface of the table 1.

The levers 44 pass downward through the apertures 50—50 cut in the table and are fastened upon the shaft 51 mounted in the bearings 52—52 secured to the under side of the table. Secured to one end of the shaft 51 is the cam lever 53 carrying the cam roller 54 which engages the cam surface 55 of the cam disc 56. (See Fig. 3.) The cam disc 56 is fastened upon the spindle 57 which is rotated by the single revolution clutch arrangement of the lever 58, the worm wheel 59, the worm 60 and clutch 61; the action of which is fully described and illustrated in my application of October 31, 1930; Serial No. 492,437.

Integral with the upper right hand side of the hopper supporting frame 22 is the boss 62 which acts as a bearing for the push rods 63 and 64. These push rods 63 and 64 serve to swing the front and rear hopper plates 3 and 4 when actuated as illustrated in Figs. 9, 10 and 11, and they are connected to the ends of the shafts 9 and 10 by the bell cranks 65 and 66 respectively. Located behind the boss 62 and encircling the extending ends of the push rods 63 and 64 are the coil compression springs 67. The knurled nuts 68 retain these springs under compression and act as adjustment nuts for the pusher plate 69 through which both rods 63 and 64 pass. This adjustment is made when the front and rear hopper plates are adjusted to meet the length of the cigars to be handled in the hopper. The split clamp 70 grips both push rods and is adjusted to hold the front and rear swinging plates 3 and 4 in their perpendicular position, as illustrated most clearly in Figs. 3 and 9, against the expansion of the coil springs 67. The rearwardly extending threaded ends of the push rods 63 and 64 pass through an elongated slot in the top of the lever 71. The purpose of this slot is to allow the push rods to be long enough for adjustment and allow for their up and down movement as illustrated in Figs. 9, 10 and 11, and allow the face 72 at the top of the lever 71 to exert a uniform pressure upon the pusher plate 69. The lower end of the lever 71 pivots on the pin 73 supported in the bearing 74 secured to the underside of the table 1. Integral with the lower end of lever 71 is the arm 75 carrying the cam roller 76 which engages the cam surface 77 integral with the cam disc 56 and concentrically located within the cam surface 55. The coil spring 78, (see Fig. 3) which is fastened to the lug 79 of the bell crank formed by the lever 71 and arm 75, is anchored to the pin 80, and is of such dimensions to exert enough power to keep the cam roller 76 in contact with its cam surface 77 and to overcome the combined resistance of the springs 67.

The conveyor belt 81 is of sufficient length to carry the cigars to a cooperating banding or wrapping mechanism. The belt slides across the top of the table 1 in the direction of the arrows shown in Figs. 1 and 2. The travel of the belt is a stop and start action which is governed by the length of time needed to band or wrap one cigar. This stop and start motion is transmitted from the banding or wrapping mechanism by the push rod 82, the pawl 83, and the ratchet 84. The rotation of the ratchet is transmitted to the conveyor pulley 85 by the shaft 86 upon which both are secured, and which is carried by the bearing bracket 87. Directly above the belt and close to the side frame 6 are the feeler fingers 88—88 which are carried by the lever 89 pivoted on the pin 90 supported in the bearing 91.

Having thus described my invention in detail, I will now describe its operation.

As the last cigar of the row previously deposited on the conveyor belt passes beneath the feeler fingers 88, they will drop with their supporting lever 89 and actuate the clutch mechanism. This causes the cam disc 56 to rotate, and the cam roller 54 follows the decline of the cam surface 55; which brings about the lowering of the forward ends of the levers 44. As these levers begin to move downward, the hopper supporting frame 22 will slide downward with them on its guides 40 due to its own weight, plus that of the hopper and the downward pull of the spring 45. During this part of the operation, the elevation of the cam roller 76 has not changed; and the lever 71 remained stationary. With this part of the operations completed, the swinging front and rear plates 3 and 4 have taken the position illustrated in Fig. 4 and the push rods 63 and 64 have taken the position illustrated in Fig. 9. It must be mentioned at this time that length or elapsed time of a stop period of the conveyor belt is equal to one complete revolution of the cam disc; and it is during one of these stop periods that this entire cigar feeding operation is completed. Referring to Fig. 4, it will be noted that the plates 3 and 4 have descended to such an extent to cause the flange 3^a and the ledge 4^a to clear the bottom row of cigars; the weight of the stack having been placed upon the conveyor belt 81. To allow the flange 3^a and the ledge 4^a with its integral depending flange 4^b to move freely, I have provided the recess 95 and the slot 96 for this purpose.

As the cam disc continues to rotate, the cam roller 54 idles but the cam roller 76 rides down a slight decline in the cam surface 77 which moves the lever 71 forward, bringing its face 70 into contact with the pusher plate 69, and pushes it forward against the compression of the springs 67 on the rods 63 and 64 until the parts have taken the position illustrated in Fig. 10. This action has swung the front plate 3 outward until its flange 3^a has cleared the cigar stack and the aligning plate 2, and has also swung the rear plate 4 backward until its ledge 4^a and its flange 4^b have cleared the rear of the cigar stack, as is clearly illustrated in Fig. 5.

At this point in the cycle, the cam roller 54 starts to travel up an incline of the cam surface 55. This causes the lever 44 to push the hopper supporting frame 22 upward until it has traversed about four-fifths of its downward movement. During this time, the cam roller 76 has been idling, and the front and rear plates have been held in their outwardly swung positions as illustrated in Fig. 6, by reason of the pusher plate 69 sliding upward on the face 72 of the lever 71 as illustrated in Fig. 11. With the front and rear plates in this position, the flange 3^a is located on a line with the top of the bottom row of cigars, and the depending flange 4^b of the plate 4

is in a direct line with the rear end of the bottom row. At this time, the cam roller 54 again idles, holding the hopper at this elevation, while the cam roller 76 rolls up an incline of its cam surface, causing the lever 71 to be moved backward to its original position, thereby releasing the pusher plate 69. This release of the pusher plate allows the springs 67 to expand; the pressure being exerted against the knurled nuts 68, and the push rods 63 and 64 are moved backward until the clamp 70 contacts with the boss 22; when the front and rear plates will again have taken their original perpendicular positions. This inward swing of the rear plate pushes the bottom row of cigars forward by means of its depending flange 4^b, while the flange 3^a of the front plate has gone in between the curved ends of the bottom row and those of the row above it as illustrated in Fig. 7. When the bottom row of cigars are pushed forward by the flange 4^b, the entire stack of rows would move forward with it, and it is for the purpose of preventing this movement that I employ the aligning plate 2.

As the cam disc continues its cycle, the cam roller 76 again idles, and the cam roller 54 rolls up another incline, causing the lever 44 to push the supporting frame 22 and the hopper upward to its original starting position leaving the bottom row of cigars free and clear of the hopper, as illustrated in Figs. 3 and 8. At this point, the clutch mechanism becomes inactive and the conveyor belt starts to carry the deposited row of cigars toward a banding or wrapping mechanism with either of which, or both, this invention will cooperate.

It will be understood that the machine as illustrated is applicable for use with either blunt end cigars as shown or cigars that are rounded at both ends; it being easily seen that the depending flange 4^b would push a round end cigar forward as readily as the blunt ended ones shown. Should it be desired to handle only cigars which are rounded at both ends, the depending flange 4^b may be dispensed with and the ledge 4^a will then be given the form of the flange 3^a. This would allow it to enter between the curves of the ends as does flange 3^a without pushing the bottom row forward as illustrated without departing from the spirit of the invention.

From this consideration of the hopper to conveyor feeding mechanism, it will be seen that the machine automatically performs the required depositing of an unmutilated row of cigars from the bottom of the hopper to the conveyor. It will also be seen that the cigar supply is automatically coordinated with the movement of the cigars by the conveyor and that the overfeeding of cigars from the hopper is impossible as the feed is controlled by the passage of the last cigar under a pair of feeler fingers. While this invention is disclosed in connection with one preferred structural embodiment thereof, it will be clearly understood that various changes in the mechanical construction and a full use of equivalents may be resorted to throughout without departing from the spirit of the invention.

In accordance with the provisions of the patent statues, I have described my invention, but I desire it understood that it is not confined to the particular form shown and described, the same being merely illustrative, and that the invention can be carried out in other ways without departing from the spirit of my invention, and therefore, I claim broadly the right to employ all equivalent instrumentalities coming within the scope of the appended claims, and by means of which, objects of my invention are attained and new results accomplished; as it is obvious that the particular embodiments herein shown and described are only some of many that can be employed to attain these objects and accomplish these results.

Having now described my invention, what I claim and desire to secure by Letters Patent is:

1. In a cigar handling machine, a hopper in which rows of cigars are retained in the form of a stack, means for depositing said stack upon a conveyor, and means for leaving the bottom row of cigars of said stack upon a conveyor, said last means including hinged sides of said hopper.

2. In a cigar handling machine, a hopper in which rows of cigars are retained in the form of a stack, and means for imparting a reciprocal motion to said hopper for depositing said stack upon a conveyor.

3. In a cigar handling machine, a hopper in which rows of cigars are retained in the form of a stack, means for imparting a reciprocal motion to said hopper for depositing said stack upon a conveyor, and means for leaving the bottom row of cigars of said stack deposited upon said conveyor.

4. In a cigar handling machine, a hopper in which rows of cigars are retained in the form of a stack, and means for imparting a reciprocal motion to said hopper for depositing said stack upon a conveyor, said hopper including hinged sides adapted to separate the bottom row of cigars from the stack.

5. In a cigar machine, a hopper in which cigars are retained in rows which form a stack, said hopper including hinged sides, means for imparting a reciprocal motion to said hopper for depositing said stack upon a conveyor, said sides being movable to leave the bottom row of cigars of said stack deposited upon said conveyor.

6. In a machine of the character described, a hopper having pivoted members, said pivoted members having flanges adapted to support a stack of cigars.

7. In a cigar handling machine, a hopper having movable side walls, means for vertically moving the walls to vertically move a stack of cigars, means for pivotally moving the walls to separate a row of cigars from the stack, and means for jointly moving the walls to jointly lift the remainder of the stack and therewith move the segregated row.

FRANCIS X. MALOCSAY.