PCT WORLD INTELLECTUAL PROPERTY ORGANIZATION
International Bureau

INTERNATIONAL APPLICATION PUBLISHED UNDER THE PATENT COOPERATION TREATY (PCT)

(51) International Patent Classification 6 : F16L 47/06, 9/12, 49/02 — A1

(11) International Publication Number: WO 96/18064

(43) International Publication Date: 13 June 1996 (13.06.96)

(21) International Application Number: PCT/GB95/02809

(22) International Filing Date: 1 December 1995 (01.12.95)

(30) Priority Data:
9424501.6 5 December 1994 (05.12.94) GB

(71) Applicant *(for all designated States except US)*: AL-QUDAIBI, Suliman, Ahmed [KW/KW]; Kuwait Sponge Industries Co. W.L.L., P.O. Box 5090, Safat, 13051 (KW).

(71)(72) Applicant and Inventor: BOATMAN, Peter, James [GB/KW]; Kuwait Sponge Industries Co. W.L.L., P.O. Box 5090, Safat, 13051 (KW).

(74) Agent: DREVER, Ronald, Fergus; Swindell & Pearson, 48 Friar Gate, Derby DE1 1GY (GB).

(81) Designated States: AM, AT, AU, BB, BG, BR, BY, CA, CH, CN, CZ, DE, DK, EE, ES, FI, GB, GE, HU, IS, JP, KE, KG, KP, KR, KZ, LK, LR, LT, LU, LV, MD, MG, MN, MW, MX, NO, NZ, PL, PT, RO, RU, SD, SE, SG, SI, SK, TJ, TM, TT, UA, UG, US, UZ, VN, European patent (AT, BE, CH, DE, DK, ES, FR, GB, GR, IE, IT, LU, MC, NL, PT, SE), OAPI patent (BF, BJ, CF, CG, CI, CM, GA, GN, ML, MR, NE, SN, TD, TG), ARIPO patent (KE, LS, MW, SD, SZ, UG).

Published
With international search report.
Before the expiration of the time limit for amending the claims and to be republished in the event of the receipt of amendments.

(54) Title: PIPE ASSEMBLY

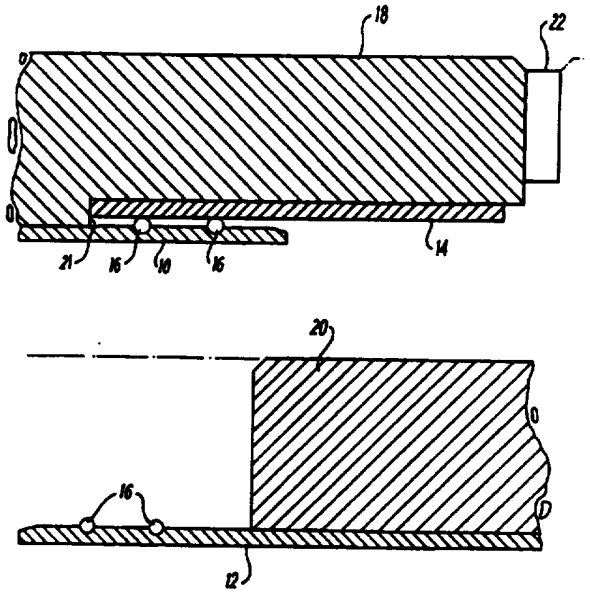

(57) Abstract

A pipe is assembled from sections (10, 12) of a liner pipe formed of a moulded glass reinforced plastics material (GRP). A sleeve (14), also of moulded GRP, sealingly surrounds the joint between the sections (10, 12). An outer pipe of polymer concrete is formed in sections (18, 20) on the liner pipe sections (10, 12) to surround the latter together with the sleeve (14). The sections (18, 20) have a packer (22) provided between adjacent ends, and the joint is offset from the joint between the liner pipe sections (10, 12). The GRP of the liner pipe can withstand high chemical concentrations in toxic sewage, the sleeve (14) preventing seepage of sewage and being able to withstand chemical attack by any passing through the inner joint. The polymer concrete enables the pipe to withstand jacking forces, and is also resistant to chemical attack from a basically saline surrounding soil.

FOR THE PURPOSES OF INFORMATION ONLY

Codes used to identify States party to the PCT on the front pages of pamphlets publishing international applications under the PCT.

AT	Austria	**GB**	United Kingdom	**MR**	Mauritania
AU	Australia	**GE**	Georgia	**MW**	Malawi
BB	Barbados	**GN**	Guinea	**NE**	Niger
BE	Belgium	**GR**	Greece	**NL**	Netherlands
BF	Burkina Faso	**HU**	Hungary	**NO**	Norway
BG	Bulgaria	**IE**	Ireland	**NZ**	New Zealand
BJ	Benin	**IT**	Italy	**PL**	Poland
BR	Brazil	**JP**	Japan	**PT**	Portugal
BY	Belarus	**KE**	Kenya	**RO**	Romania
CA	Canada	**KG**	Kyrgystan	**RU**	Russian Federation
CF	Central African Republic	**KP**	Democratic People's Republic of Korea	**SD**	Sudan
CG	Congo			**SE**	Sweden
CH	Switzerland	**KR**	Republic of Korea	**SI**	Slovenia
CI	Côte d'Ivoire	**KZ**	Kazakhstan	**SK**	Slovakia
CM	Cameroon	**LI**	Liechtenstein	**SN**	Senegal
CN	China	**LK**	Sri Lanka	**TD**	Chad
CS	Czechoslovakia	**LU**	Luxembourg	**TG**	Togo
CZ	Czech Republic	**LV**	Latvia	**TJ**	Tajikistan
DE	Germany	**MC**	Monaco	**TT**	Trinidad and Tobago
DK	Denmark	**MD**	Republic of Moldova	**UA**	Ukraine
ES	Spain	**MG**	Madagascar	**US**	United States of America
FI	Finland	**ML**	Mali	**UZ**	Uzbekistan
FR	France	**MN**	Mongolia	**VN**	Viet Nam
GA	Gabon				

Pipe Assembly

This invention relates to a pipe assembly, and particularly a corrosion resistant pipe assembly adapted for use with liquids having high chemical concentrations or of a corrosive nature and in ground having a corrosive nature.

Pipes are either laid in the ground by cutting an open trench, or are laid at increased depths by micro-tunnelling where the pipes are jacked through the ground. The pipes in the latter case have to be strong enough to withstand the forces imposed by jacking, and in each case have also to be strong enough to withstand the inherent ground forces. In conditions where the pipe contents have a high chemical concentration or are of a corrosive nature, the pipes cannot be made of conventional materials, which are incapable of withstanding chemical attack by the contents such as raw sewage, and sea water.

Pipes which are corrosion resistant, such as glass reinforced plastics or rigid PVC pipes, are classed as flexible pipes and rely on the surrounding ground to provide their strength. As a result, after laying the pipes, back filling has to be carried out fairly

carefully using special graded materials. In areas with a high water table, or if construction takes place at a later date near the pipes, the ground surrounding the pipes can be disturbed, so removing the support for the pipes.

To overcome this, thicker pipes could be used, but this becomes expensive. Alternatively, glass reinforced plastics pipes incorporating sand with a glass fibre reinforcement have been used, but these are not very corrosion resistant, and the sand incorporated causes the laminate to break down so that they are not suitable for use at pressure.

Also in some countries, the nature of the ground is such that the pipes have to withstand possible attack from corrosive elements in the surrounding soil and are subject to high relative movements between adjacent pipe sections. Often they can be subject to not being laid in accordance with manufacturer's recommendations.

According to the present invention there is provided a pipe having an inner section formed of a corrosion resistant material, an outer section formed of a material designed to withstand external forces applied to the pipe, and a sleeve located between the inner and outer sections to sealingly overlie a free end of the

inner section, the sleeve being formed of a corrosion resistant material.

Preferably the inner section is moulded from a glass reinforced plastics material, preferably a material formed of a corrosion resistant resin and corrosion resistant glass fibre. The sleeve is preferably also moulded from a glass reinforced plastics material, for example a material formed of a corrosion resistant resin with corrosion resistant glass fibre.

Preferably also the outer section is formed of polymer concrete, for example formed from synthetic resin and inorganic fillers. The polymer concrete may be formed with an abrasion resistant outer face, for example of glass reinforced plastics material such as a synthetic resin with glass fibre.

According to the present invention there is further provided a pipe assembly comprising a plurality of inner pipe sections for end to end arrangement, each inner pipe section being formed of a corrosion resistant material, and a plurality of outer pipe sections for end to end arrangement surrounding the inner pipe sections, the outer pipe sections each being formed of a material designed to withstand external forces applied to the assembly, and at least one sleeve for sealingly

surrounding the joint, the sleeve being formed of a corrosion resistant material.

Preferably the inner pipe sections are each moulded from a glass reinforced plastics material, preferably a material formed of a corrosion resistant resin and corrosion resistant glass fibre. The or each sleeve is preferably also moulded from a glass reinforced plastics material, for example a material formed of a corrosion resistant resin with corrosion resistant glass fibre.

Preferably also the outer pipe sections are each formed of polymer concrete, for example formed from synthetic resin and inorganic fillers. The polymer concrete may be formed with an abrasion resistant outer face, for example of glass reinforced plastics material such as a synthethic resin with glass fibre.

The respective sleeve may be arranged to overlie each side of the joint, and at least one seal may be provided between the sleeve and each side of the joint. Each seal may be chemically resistant, and may be formed of rubber, for example a hydrofluoric rubber or an EPDM rubber.

At each joint of the outer pipe sections, a packer

may be provided for locating between the adjacent ends of the respective pipe sections, and the packer may be formed of wood. Said one sleeve may be provided for sealingly surrounding the joint between the or each pair of outer pipe sections. The or each outer sleeve is preferably formed of a glass reinforced plastics material, for example formed from corrosion resistant resin with corrosion resistant glass fibre, and may locate in respective recesses in the outer faces of the outer pipe sections.

Each of the inner pipe sections may be provided at its inner surface with a homogeneous lining formed from a chemically resistant resin together with glass fibre.

The present invention yet further provides a method of assembling a pipe comprising providing a plurality of inner pipe sections each formed of a corrosion resistant material, forming a plurality of outer pipe sections surrounding the inner pipe sections, the outer pipe sections each being formed of a material designed to withstand external forces applied to the assembly and sealingly surrounding the joint with a sleeve which is formed of a corrosion resistant material.

Embodiments of the present invention will now be

described by way of example only, with reference to the the accompanying drawings, in which:-

Fig. 1 is a sectional view through part of one embodiment of a sewage pipe assembly prior to adjacent pipe sections being interconnected; and

Fig. 2 is a sectional view through part of another embodiment of a sewage pipe assembly with adjacent pipe sections interconnected.

Referring to Fig. 1 of the drawings, there is shown a joint area between an intended end to end connection between a pair of sewage pipe sections, prior to the sections being joined together. An inner or liner pipe has two sections 10, 12 intended to be in end to end alignment, each section 10, 12 being formed of a corrosion resistant material sufficient to withstand the high chemical concentrations to be found in sewage in certain conditions. The sections 10, 12 are preferably each formed of a moulded glass reinforced plastics (GRP) material, for example a corrosion resistant resin such as a vinylester resin with corrosion resistant glass fibre. Also, each section 10, 12 may be formed homogeneously with an inner liner or facing formed from a chemically higher resistant resin and glass fibre. The sections 10, 12 can be formed as filament wound pipes with a minimum thickness of 6 mm.

A sleeve 14 surrounds the joint between the sections 10, 12 and overlies the ends of the latter, the sleeve 14 preferably being formed of a corrosion resistant material, for example a moulded GRP material. Again, the latter material may be formed from a corrosion resistant resin such as a vinylester resin with corrosion resistant glass fibre. The sleeve 14 sealingly surrounds the joint between the pipe sections 10, 12 by means of a pair of rubber sealing rings 16 between the sleeve 14 and each of the sections 10, 12. The seals 16 are preferably formed of a chemically resistant rubber, and may be of a hydrofluoric rubber or EPDM.

When the pipe assembly has to be strong enough to withstand forces imposed by jacking through the ground during the process of micro-tunnelling, conventional materials such as concrete are undesirable in that, for strength, the concrete has to be very thick so that the resultant pipe is very heavy, and also, due to the corrosive nature of the soil in some countries, the concrete is susceptible to chemical attack. To have sufficient strength, a pipe formed of GRP would also have to be very thick and consequently would be very expensive. A GRP pipe formed by the sections 10, 12 is given sufficient strength by the provision of an outer pipe formed of a strength giving material such as

polymer concrete, the outer pipe being illustrated in the drawing as having two pipe sections 18, 20 arranged to locate in end to end alignment, with the joint therebetween being off-set from the joint between the inner pipe sections 10, 12. For this purpose, the outer pipe section 18 has an annular recess 21 on its inner face in which to locate the sleeve 14.

The polymer concrete sections 18, 20 are moulded around the respective GRP pipe sections 10, 12. During moulding, shuttering for the polymer concrete is coated with a synthetic resin glass fibre reinforcement which provides extra strength and an abrasion or scratch resistant outer face to the outer pipe sections 18, 20. A packer 22, preferably of wood, is provided between adjacent ends of the pipe sections 18, 20.

The outer faces of the pipe sections 18, 20 may be recessed adjacent the joint area whereby an outer sleeve (not shown) can sealingly locate therein, such an outer sleeve preferably being formed of a GRP material, for example of a corrosion resistant resin such as a vinylester resin with corrosion resistant glass fibre.

With such an assembled pipe, the GRP of the inner pipe can withstand high chemical concentrations with toxic liquids passing therethrough, the sleeve 14

preventing seepage of liquid and being able to withstand chemical attack by any liquids passing through the joint in the pipe sections 10, 12. The increased strength of polymer concrete enables the assembled pipe to withstand jacking forces without a large and heavy assembled pipe as would otherwise be required. The polymer concrete is also resistant to chemical attack from the basically saline surrounding soil, when used for example in Middle East countries. The use of the external sleeve further prevents the ingress of ground water into the assembled pipe, and in addition affords much greater shear strength.

In Fig. 2 of the drawings, like reference numbers are used for like parts with the first embodiment shown in Fig. 1. In the Fig. 2 embodiment, the sleeve 14 is omitted, and one pair of the rubber sealing rings 16 seals the joint directly between the sections 10, 12.

The outer faces of the pipe sections 18, 20 are recessed adjacent the joint area, each recess being stepped in a direction away from the joint to provide a first recessed section 24 at the joint, and a second, more shallow, recessed section 26. An outer sleeve 28 locates across the joint in the recesses, with a first sealing ring 30 being located in each recessed section 24 between the sleeve 28 and the respective pipe section

18, 20, and a second sealing ring 32 being located in each of the recessed sections 26 to locate between a respective end of the sleeve 28 and an end shoulder 34. The sleeve 28 is preferably formed of a GRP material, for example of a corrosion resistant resin such as a vinylester resin with corrosion resistant glass fibre.

The pipe of Fig. 2 may omit the sleeve 28 and associated recesses in the outer face, to be used as a standard jacking pipe, or may be profiled at the respective ends of the pipe sections 18, 20 and omit the packer 22, for use as a standard pipe.

When a pipe is required for laying in an open cut trench, i.e. where jacking forces are not involved, it is appropriate to have a pipe of increased stiffness, particularly in some countries where the nature of the ground is such that increased relative movement between pipe sections can be anticipated. The inner GRP pipe takes into account the high chemical concentrations of the contents, but the inherent flexibility of GRP would otherwise allow movement of the pipe due to the surrounding ground conditions, and this in turn might lead to sealing problems. Use of the outer pipe, preferably of polymer concrete, enables a sufficient increase in stiffness to prevent undesirable relative movement between pipe sections, without large increases

in pipe sizes. The pipe of Fig. 2 may also be appropriate for laying in an open cut trench.

The use of polymer concrete together with GRP components can result in a 50% increase in strength of the assembled pipe in relation to a polymer concrete pipe. The resultant pipe is as rigid as a concrete pipe but does not require to have steel reinforcement. A polymer concrete pipe without GRP elements can only work at low pressures, but with GRP elements, the assembled pipe can work at high pressures, for example 2500 psi, and can also withstand vacuum.

Various modifications may be made without departing from the invention, which is applicable to gravity pipes or pressure pipes. For example, different designs of seals may be used and different pipe materials may be used provided they meet the necessary requirements.

Claims:-

1. A pipe having an inner section formed of a corrosion resistant material, an outer section formed of a material designed to withstand external forces applied to the pipe, and a sleeve located between the inner and outer sections to sealingly overlie a free end of the inner section, the sleeve being formed of a corrosion resistant material.

2. A pipe according to Claim 1, wherein the inner section is moulded from a glass reinforced plastics material.

3. A pipe according to Claim 2, wherein the material is formed of a corrosion resistant resin and corrosion resistant glass fibre.

4. A pipe according to any of Claims 1 to 3, wherein the sleeve is moulded from a glass reinforced plastics material.

5. A pipe according to Claim 4, wherein the material of the sleeve is formed of a corrosion resistant resin with corrosion resistant glass fibre.

6. A pipe according to any of the preceding Claims, wherein the outer section is formed of polymer concrete.

7. A pipe according to Claim 6, wherein the polymer concrete is formed with an abrasion resistant outer face.

8. A pipe according to Claim 6, wherein the outer face is formed of a glass reinforced plastics material.

9. A pipe according to Claim 8, wherein the outer face is provided by a synthetic resin with glass fibre.

10. A pipe assembly comprising a plurality of inner pipe sections for end to end arrangement, each inner pipe section being formed of a corrosion resistant material, a plurality of outer pipe sections for end to end arrangement surrounding the inner pipe sections, the outer pipe sections each being formed of a material designed to withstand external forces applied to the assembly, and at least one sleeve for sealingly surrounding the joint, the sleeve being formed of a corrosion resistant material.

11. A pipe assembly according to Claim 10, wherein the inner pipe sections are each moulded from a glass reinforced plastics material.

12. A pipe assembly according to Claim 11, wherein the material is formed of a corrosion resistant resin and corrosion resistant glass fibre.

13. A pipe assembly according to any of Claims 10 to 12, wherein or each sleeve is moulded from a glass reinforced plastics material,

14. A pipe assembly according to Claim 13, wherein the sleeve material is formed of a corrosion resistant resin with corrosion resistant glass fibre.

15. A pipe assembly according to any of Claims 10 to 14, wherein the outer pipe sections are each formed of polymer concrete.

16. A pipe assembly according to Claim 15, wherein the polymer concrete is formed with an abrasion resistant outer face.

17. A pipe assembly according to Claim 15, wherein the outer face is formed of a glass reinforced plastics material.

18. A pipe assembly according to Claim 16, wherein the outer face is provided by a synthethic resin with glass fibre.

19. A pipe assembly according to any of Claims 10 to 18, wherein said one sleeve sealingly surrounds the joint between the or each pair of inner pipe sections.

20. A pipe assembly according to any of Claims 10 to 18, wherein said one sleeve is provided for sealingly surrounding the joint between the or each pair of outer pipe sections.

21. A pipe assembly according to Claim 20, including the sleeve according to Claim 19.

22. A pipe assembly according to any of Claims 19 to 21, wherein the respective sleeve is arranged to overlie each side of the joint, and at least one seal is provided between the sleeve and each side of the joint.

23. A pipe assembly according to Claim 22, wherein each seal is chemically resistant.

24. A pipe assembly according to Claim 22 or 23, wherein each seal is formed of a hydrofluoric rubber.

25. A pipe assembly according to Claim 22 or 23, wherein each seal is formed of an EPDM rubber.

26. A pipe assembly according to any of Claims 10 to

24, wherein, at each joint of the outer pipe sections, a packer is provided for locating between the adjacent ends of the respective pipe sections,

27. A pipe assembly according to Claim 26, wherein the packer is formed of wood.

28. A pipe assembly according to any of Claims 20 to 27, wherein the or each outer sleeve locates in respective recesses in the outer faces of the outer pipe sections.

29. A pipe assembly according to any of Claims 10 to 28, wherein each of the inner pipe sections is provided at its inner surface with a homogeneous lining formed from a chemically resistant resin together with glass fibre.

30. A method of assembling a pipe comprising providing a plurality of inner pipe sections each formed of a corrosion resistant material, forming a plurality of outer pipe sections surrounding the inner pipe sections, the outer pipe sections each being formed of a material designed to withstand external forces applied to the assembly and sealingly surrounding the joint with a sleeve which is formed of a corrosion resistant material.

31. A pipe substantially as hereinbefore described with reference to the accompanying drawings.

32. A pipe assembly substantially as hereinbefore described with reference to the accompanying drawings.

33. A method of assembling a pipe substantially as hereinbefore described with reference to accompanying drawings.

1/2

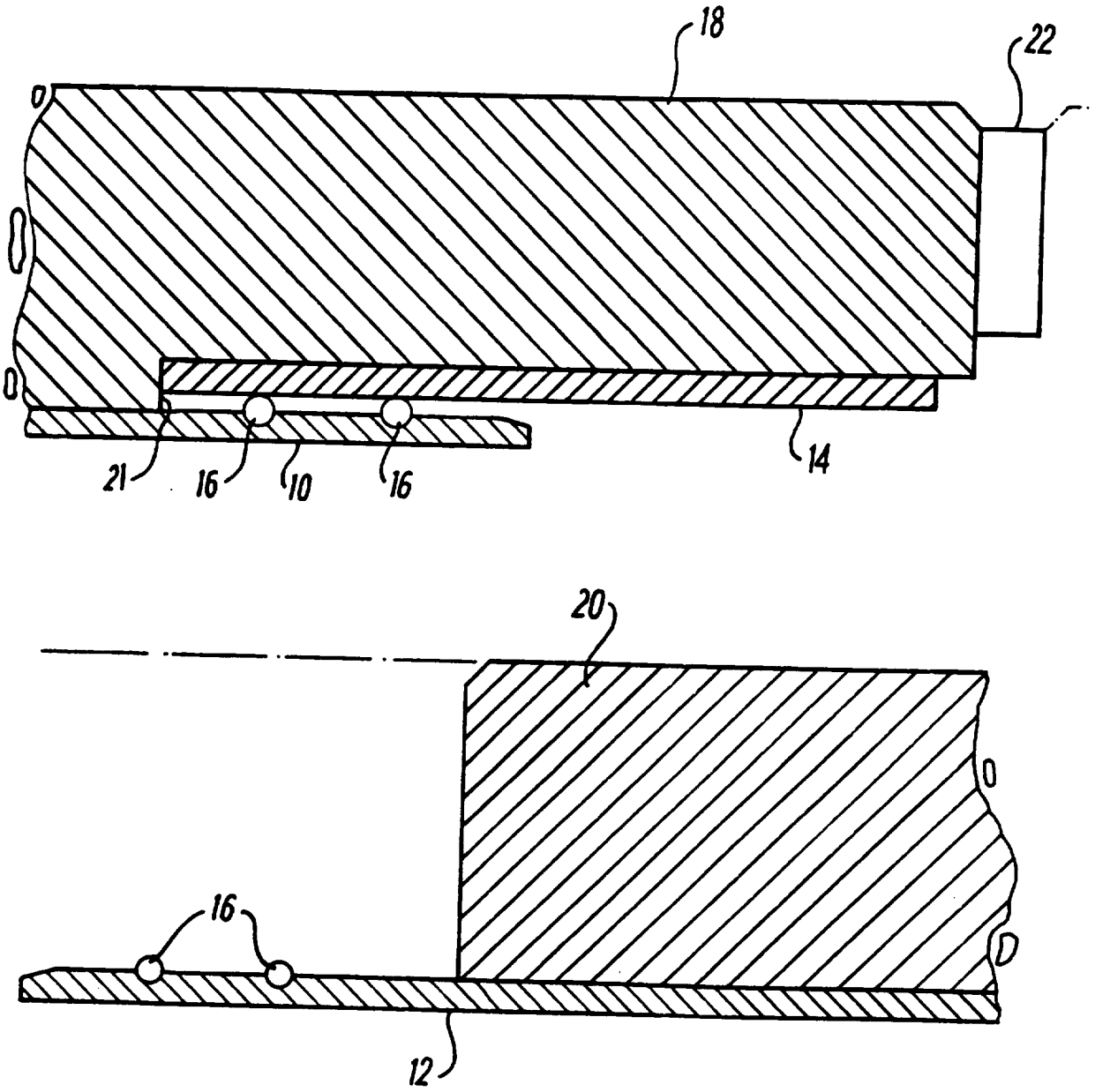

FIG. 1

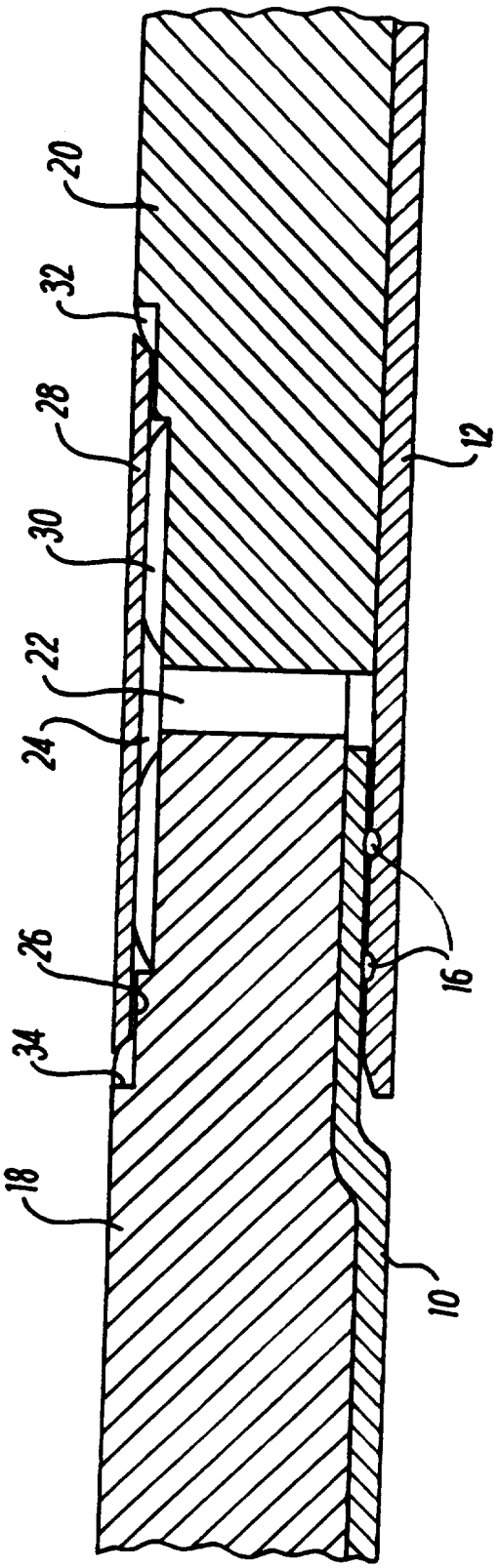

FIG. 2

INTERNATIONAL SEARCH REPORT

Inter nal Application No
PCT/GB 95/02809

A. CLASSIFICATION OF SUBJECT MATTER
IPC 6 F16L47/06 F16L9/12 F16L49/02

According to International Patent Classification (IPC) or to both national classification and IPC

B. FIELDS SEARCHED

Minimum documentation searched (classification system followed by classification symbols)
IPC 6 F16L

Documentation searched other than minimum documentation to the extent that such documents are included in the fields searched

Electronic data base consulted during the international search (name of data base and, where practical, search terms used)

C. DOCUMENTS CONSIDERED TO BE RELEVANT

Category *	Citation of document, with indication, where appropriate, of the relevant passages	Relevant to claim No.
X Y	EP,A,0 017 254 (GRUENZWEIG & HARTMANN MONTAGE ;FIBERCAST GMBH (DE)) 15 October 1980 see the whole document ---	1-5, 10-14, 19,26, 29,30 6,15
X X Y	US,A,4 167 953 (CARLSTROM BORGE I) 18 September 1979 see the whole document ---	10-12, 19-22, 26,29,30 23-25 6,15, 26-28
Y A	US,A,5 054 824 (WYSS WALTER) 8 October 1991 see column 3, line 26 - column 3, line 28; figure 4 ---	28 4,5,8,9

-/--

[X] Further documents are listed in the continuation of box C.

[X] Patent family members are listed in annex.

* Special categories of cited documents :

"A" document defining the general state of the art which is not considered to be of particular relevance

"E" earlier document but published on or after the international filing date

"L" document which may throw doubts on priority claim(s) or which is cited to establish the publication date of another citation or other special reason (as specified)

"O" document referring to an oral disclosure, use, exhibition or other means

"P" document published prior to the international filing date but later than the priority date claimed

"T" later document published after the international filing date or priority date and not in conflict with the application but cited to understand the principle or theory underlying the invention

"X" document of particular relevance; the claimed invention cannot be considered novel or cannot be considered to involve an inventive step when the document is taken alone

"Y" document of particular relevance; the claimed invention cannot be considered to involve an inventive step when the document is combined with one or more other such documents, such combination being obvious to a person skilled in the art.

"&" document member of the same patent family

Date of the actual completion of the international search	Date of mailing of the international search report
27 March 1996	23.04.96

Name and mailing address of the ISA	Authorized officer
European Patent Office, P.B. 5818 Patentlaan 2 NL - 2280 HV Rijswijk Tel. (+ 31-70) 340-2040, Tx. 31 651 epo nl, Fax: (+ 31-70) 340-3016	Phlix, P

Form PCT ISA 210 (second sheet) (July 1992)

INTERNATIONAL SEARCH REPORT

Inter nal Application No
PCT/GB 95/02809

C.(Continuation) DOCUMENTS CONSIDERED TO BE RELEVANT

Category *	Citation of document, with indication, where appropriate, of the relevant passages	Relevant to claim No.
Y	US,A,3 953 629 (WESCH LUDWIG) 27 April 1976 see column 3, line 3 - column 3, line 20 ---	6,15
Y	US,A,4 450 873 (SADLER THOMAS H ET AL) 29 May 1984 see column 1, line 16 - column 1, line 32 ---	6,15
Y	FR,A,2 421 324 (TUYAUX BONNA) 26 October 1979 see figures 3,4 -----	26,27

1

INTERNATIONAL SEARCH REPORT

Information on patent family members

International Application No
PCT/GB 95/02809

Patent document cited in search report	Publication date	Patent family member(s)		Publication date
EP-A-0017254	15-10-80	DE-A-	2913876	16-10-80
		AT-T-	3904	15-07-83
		WO-A-	8002189	16-10-80
US-A-4167953	18-09-79	SE-B-	414770	18-08-80
		SE-A-	7505442	13-11-76
US-A-5054824	08-10-91	CH-A-	677522	31-05-91
		DE-A-	3934430	17-05-90
US-A-3953629	27-04-76	BE-A-	779339	30-05-72
		CH-A-	606684	15-11-78
		DE-A-	2129143	21-12-72
		FR-A,B	2140678	19-01-73
		GB-A-	1372477	30-10-74
		NL-A-	7207776	13-12-72
		OA-A-	4025	15-09-79
		SE-B-	405461	11-12-78
US-A-4450873	29-05-84	US-A-	4171238	16-10-79
FR-A-2421324	26-10-79	NONE		