(12) INTERNATIONAL APPLICATION PUBLISHED UNDER THE PATENT COOPERATION TREATY (PCT)

(19) World Intellectual Property Organization
International Bureau

(43) International Publication Date
13 July 2017 (13.07.2017)

WIPO | PCT

(10) International Publication Number
WO 2017/120188 A1

(51) International Patent Classification:
E21B 33/12 (2006.01) *E21B 17/00* (2006.01)
E21B 33/128 (2006.01)

(21) International Application Number:
PCT/US2017/012127

(22) International Filing Date:
4 January 2017 (04.01.2017)

(25) Filing Language: English

(26) Publication Language: English

(30) Priority Data:
14/989,199 6 January 2016 (06.01.2016) US

(71) Applicant: **BAKER HUGHES INCORPORATED** [US/US]; 17021 Aldine Westfield, Houston, TX 77073 (US).

(72) Inventors: **DENG, Guijun**; 46 W. Artist Grove Place, The Woodlands, TX 77382 (US). **CAYSON, Andrew, J.**; 14900 Memorial Drive, Apt. 156, Houston, TX 77079 (US). **WAKEFIELD, John, K.**; 15623 Tylermont Drive, Cypress, TX 77429 (US). **PRIETO, Carlos, A.**; 26706 Mandrake Falls Court, Katy, TX 77494 (US). **KENDALL, Alexander, M.**; 2024 Indiana Street, Houston, TX 77019 (US).

(74) Agent: **DUPHORNE, Darin, H.**; Intellectual Property Counsel, Baker Hughes Incorporated, 17021 Aldine Westfield, Houston, TX 77073 (US).

(81) Designated States *(unless otherwise indicated, for every kind of national protection available)*: AE, AG, AL, AM, AO, AT, AU, AZ, BA, BB, BG, BH, BN, BR, BW, BY, BZ, CA, CH, CL, CN, CO, CR, CU, CZ, DE, DJ, DK, DM, DO, DZ, EC, EE, EG, ES, FI, GB, GD, GE, GH, GM, GT, HN, HR, HU, ID, IL, IN, IR, IS, JP, KE, KG, KH, KN, KP, KR, KW, KZ, LA, LC, LK, LR, LS, LU, LY, MA, MD, ME, MG, MK, MN, MW, MX, MY, MZ, NA, NG, NI, NO, NZ, OM, PA, PE, PG, PH, PL, PT, QA, RO, RS, RU, RW, SA, SC, SD, SE, SG, SK, SL, SM, ST, SV, SY, TH, TJ, TM, TN, TR, TT, TZ, UA, UG, US, UZ, VC, VN, ZA, ZM, ZW.

(84) Designated States *(unless otherwise indicated, for every kind of regional protection available)*: ARIPO (BW, GH, GM, KE, LR, LS, MW, MZ, NA, RW, SD, SL, ST, SZ, TZ, UG, ZM, ZW), Eurasian (AM, AZ, BY, KG, KZ, RU, TJ, TM), European (AL, AT, BE, BG, CH, CY, CZ, DE, DK, EE, ES, FI, FR, GB, GR, HR, HU, IE, IS, IT, LT, LU, LV, MC, MK, MT, NL, NO, PL, PT, RO, RS, SE, SI, SK, SM, TR), OAPI (BF, BJ, CF, CG, CI, CM, GA, GN, GQ, GW, KM, ML, MR, NE, SN, TD, TG).

Declarations under Rule 4.17:

— *as to applicant's entitlement to apply for and be granted a patent (Rule 4.17(ii))*

— *as to the applicant's entitlement to claim the priority of the earlier application (Rule 4.17(iii))*

Published:

— *with international search report (Art. 21(3))*

— *before the expiration of the time limit for amending the claims and to be republished in the event of receipt of amendments (Rule 48.2(h))*

(54) Title: SLOTTED ANTI-EXTRUSION RING ASSEMBLY

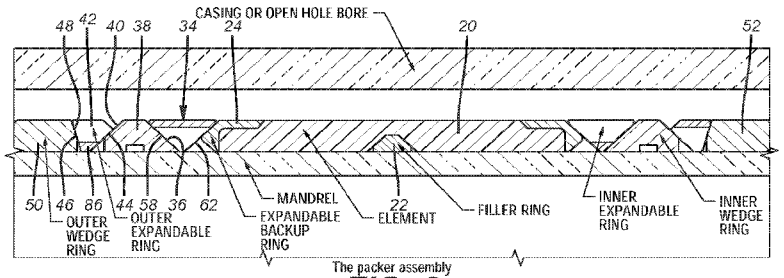

FIG. 2

(57) Abstract: A sealing element is flanked by wedge-shaped extrusion ring assemblies. The extrusion rings are continuous for 360 degrees and are slotted from the outside dimension and alternatively from the inside dimension to allow the diameter to increase to the surround tubular or open hole. The extrusion rings climb a ramp on an adjacent pedestal ring on the way out to the borehole wall. Depending on the dimension of the gap to be spanned the extrusion ring slides a variable distance up the pedestal ring ramp. An optional anchor ring is initially forced up an opposite ramp of the pedestal ring. If the sealing gap is short the anchor ring can be eliminated. For larger gaps the anchor ring moves out far enough toward the borehole wall to contact the extrusion ring located on an opposing ramp of the pedestal ring so that reaction forces are directed to keep the anchor ring wedged in position for support of the extrusion ring assembly.

WO 2017/120188 A1

SLOTTED ANTI-EXTRUSION RING ASSEMBLY

FIELD OF THE INVENTION

[0001] The field of the invention is sealing systems for subterranean tools against tubular or open hole or cased hole and more particularly anti-extrusion barriers for low, medium and extended reach for a seal element.

BACKGROUND OF THE INVENTION

[0002] In the unconventional drilling and completion industry, oil and gas deposits are often produced from tight reservoir formations through the use of fracturing and frack packing methods. To frack a well involves the high pressure and high velocity introduction of water and particulate media, typically a sand or proppant, into the near wellbore to create flow paths or conduits for the trapped deposits to flow to surface, the sand or proppant holding the earthen conduits open. Often, wells have multiples of these production zones. Within each production zone it is often desirable to have multiple frack zones. For these operations, it is necessary to provide a seal known as a frack packer, between the outer surface of a tubular string and the surrounding casing or borehole wall, below the zone being fractured, to prevent the pumped fluid and proppant from travelling further down the borehole into other production zones. Therefore, there is a need for multiple packers to provide isolation both above and below the multiple frack zones.

[0003] A packer typically consists of a cylindrical elastomeric element that is compressed axially, or set, from one end or both by gages within a backup system that cause the elastomer to expand radially and form a seal in the annular space. Gages are compressed axially with various setting mechanisms, including mechanical tools from surface, hydraulic pistons, atmospheric chambers, etc. Setting typically requires a fixed end for the gages to push against. These fixed ends are often permanent features of a mandrel but can include a dynamic backup system. When compressed, the elastomeric seal has a tendency to extrude past the gages. Therefore, anti-extrusion backups have become common in the art. However, typical elastomeric seals

maintain the tendency to extrude through even the smallest gaps in an anti-extrusion backup system.

[0004] In cased-hole applications, anchoring of compression set packers is a common feature in the completion architecture. Anchoring is provided by wedge-shaped slips with teeth that ride up ramps or cones and bite into the casing before a packer is set. These systems are not part of the backup system nor are they designed to provide anti-extrusion. Often they are used in the setting of the packer to center the assembly which lowers the amount of axial force needed to fully set the elastomer seal. Once set, anchoring systems are also useful for the life of the packer to provide a uniform extrusion gap, maintain location and help support the weight of a bottom-hole assembly in the case of coiled tubing frack jobs. Anchors also prevent tube movement in jointed strings resulting from the cooling of the string by the frack fluid. Movement of the packers can cause them to leak and lose seal.

[0005] In open-hole frack pack applications it is rarer for the packer to have anchoring mechanisms, as the anchor teeth create point load locations that can overstress the formation, causing localized flow paths around the packer through the near well-bore. However, without anchors, movement from the base pipe tubing can further energize the elastomeric seal. Energizing the seal from tube movement tends to overstress the near wellbore as well, leading to additional overstressing of the wellbore, allowing communication around the packer, loss of production, and potential loss of well control to surface. However, the art of anchoring has been reintroduced in new reservoirs in deep-water open-hole fracking operations. The current state of the art in open-hole frack pack operations requires a choice between losing sealing due to anchor contact induced fractures, packer movement, or over-energizing of the elastomeric element.

[0006] Extrusion barriers involving tapers to urge their movement to block an extrusion path for a sealing element have been in use for a long time as evidenced by US 4204690. Some designs have employed tapered surfaces to urge the anti-extrusion ring into position by wedging them outwardly as in US 6598672 or in some cases inwardly as in US 8701787. Other designs simply wrap thin metal rings at the extremities of the sealing element that are designed to contact the surrounding tubular to create the anti-extrusion barrier.

Some examples of these designs are US 8479809; US 7708080; US 2012/0018143 and US 2013/0147120. Of more general interest in the area of extrusion barriers are US 9140094 and WO 2013/128222.

[0007] In some applications the gap across which the seal is expected to function is quite large placing such applications beyond the limits of the design in US 6598672. There is a need for an extended reach design that can withstand the pressure differentials. The present invention addresses this need with a wedge shaped extrusion ring assembly that, depending on the gap to be spanned is pushed on opposing ramps along a pedestal ring for extended reach when contacted by an outer support ring. To fixate the extrusion ring in the extended position an outer support ring also moves into contact with the extrusion ring in its extended position on the pedestal ring. In the extended reach configuration of the extrusion ring, the backup ring moves part way toward the surrounding tubular or borehole. In shorter reach applications the extrusion ring can move out to the surrounding tubular or borehole wall on one side of the pedestal ring and the outer support ring is eliminated. The backup ring is wedged against the surrounding borehole wall to allow it to act as an anchor for the plug that has the sealing system. In the extended reach configuration the reaction forces from the extrusion ring are directed into the abutting backup ring and into the setting system so that the backup ring is prevented from being squeezed out of its wedged position against the pedestal ring. These and other aspects of the present invention will be more readily apparent to those skilled in the art from a review of the description of the preferred embodiment and the associated drawings while understanding that the full scope of the invention is to be found in the appended claims.

SUMMARY OF THE INVENTION

[0008] A sealing element is flanked by wedge-shaped extrusion ring assemblies. The extrusion rings are continuous for 360 degrees and are slotted from the outside dimension and alternatively from the inside dimension to allow the diameter to increase to the surround tubular or open hole. The extrusion rings climb a ramp on an adjacent pedestal ring on the way out to the borehole wall. Depending on the dimension of the gap to be spanned the extrusion ring slides a variable distance up the pedestal ring ramp. An optional anchor ring is initially forced up an opposite ramp of the pedestal ring. If the

sealing gap is short the anchor ring can be eliminated. For larger gaps the anchor ring moves out far enough toward the borehole wall to contact the extrusion ring located on an opposing ramp of the pedestal ring so that reaction forces are directed to keep the anchor ring wedged in position for support of the extrusion ring assembly.

BRIEF DESCRIPTION OF THE DRAWINGS

[0009] FIG. 1a is a prior art perspective view of split extrusion rings keyed together with splits opposed at 180 degrees shown in the run in condition;

[0010] FIG. 1b is the view of FIG. 1a in the expanded condition showing the size increase for the split in the adjacent rings;

[0011] FIG. 2 is a section view in the run in position for a long reach embodiment;

[0012] FIG. 3 is the view of FIG. 2 in the set position;

[0013] FIG. 4a is a perspective view of the extrusion ring in the run in position;

[0014] FIG. 4b is the view of FIG. 4a in the set position;

[0015] FIG. 5 is a side view of a backup ring that is located next to a sealing element;

[0016] FIG. 6 is a perspective view of an optional anchoring ring shown in the run in condition;

[0017] FIG. 7 is a section view of a short reach embodiment in the run in position;

[0018] FIG. 8 is the view of FIG. 7 in the set position;

[0019] FIG. 9 is a perspective view of FIG. 3.

DETAILED DESCRIPTION OF THE PREFERRED EMBODIMENT

[0020] To appreciate the benefits of the present invention it is necessary to review the state of the art in compression set element extrusion barriers. The sealing element design is typically one or more rubber sleeves that are axially compressed against a surrounding tubular. Extrusion barriers can be one or more layers of flexible thin sheet located at an end of a sealing assembly. As the sealing element deforms due to axial compression the extrusion barrier rings such as item 64 in US 5311938 bends with the end of sealing element and makes contact with the opposing wall to bridge the

sealing gap with the idea that the rubber is prevented from extruding axially. While serviceable this design has issues in releasing which sometimes led to the packer getting stuck even when the sealing element extended and relaxed but the extrusion ring did not relax.

[0021] FIG. 1a shows another extrusion barrier ring assembly using a pair of split rings **10** and **12** that have splits **14** and **16** respectively. The rings **10** and **12** are keyed to prevent relative rotation to keep the splits **14** and **16** spaced 180 degrees apart. When the sealing element is axially compressed these rings are moved out radially on a ring with a taper to contact the surrounding tubular as the gaps **14** and **16** get substantially larger. The enlarged gaps still created issues for rubber extrusion for the sealing element particularly in high pressure high temperature applications. With pressure differentials of over 10,000 PSI extrusion past assemblies shown in FIGS. 1a and 1b was still a significant concern.

[0022] The present invention addresses this concern in high temperature and high pressure applications by the creation and application of a 360 expandable ring design featuring alternating inner and outer radially oriented slits. For low and medium reach the expandable ring rides up a wedge ring until the surrounding tubular or the open hole borehole is contacted. In high reach application an outer expandable ring of a similar design rides on an opposite side of a wedge ring until forced into supporting contact of the principal expandable ring pushing the principal expandable ring against the surrounding borehole or tubular. The expandable rings can be made of Teflon or another flexible material that is sufficiently resilient while resistant to high temperatures and well fluids.

[0023] FIG. 2 shows the basic layout for a long reach application. Sealing element **20** can optionally have a filler ring **22** in the center. The assemblies on opposed ends of the element **20** are preferably mirror image and so they will be described only for one side with the understanding that the opposed side is an identical mirror image. An extrusion barrier in the form of an expanding ring **24** is attached to the element **20** and is sufficiently flexible to move with it. FIG. 5 shows a section view of the bonded expanding ring **24**. Ring 24 prevents the sealing element from escaping the cut slots of ring **34** and better conformability to the casing inside diameter or the borehole wall

54. It could be made of non-metallic material or very ductile metallic material.

[0024] It has sides **26**, **28** and **30** against seal **20** and a ramp surface **32**. Inner expandable ring **34** rides on ramp **32** on one side and ramp **36** of ramp ring **38**. Ring **38** has another ramp **40** opposite ramp **36** on which rides outer expandable ring **42**. Ramp **44** on outer expandable ring **42** rides on ramp **40** of ring **38**. On the other side ramp **46** rides on ramp **48** of setting ring **50**. The setting sequence results from relative movement between rings **50** and **52**. Usually one is moving while the other is stationary. FIG. 3 shows the result of the relative movement. The element **20** is up against the borehole wall or surrounding tubular **54** as is the adjacent ring **24**. Ring **38** has shifted toward element **20** by going under ring **24** that is continuously supported for 360 degrees by expandable ring **34**. Inner expandable ring **34** has moved against the borehole wall or tubular **54** by sliding along opposed ramp surfaces **32** and **36**. The outer expandable ring **42** has moved out on ramps **40** and **48** until its surface **56** engages surface **58** of inner expandable ring **34** to wedge it against the borehole wall or tubular **54**. The new relative position of rings **50** and **52** can be releasably locked to hold the FIG. 3 set position until it is time to retrieve the packer. The abutting of rings **42** and **34** allows ring **34** to travel further out radially than in the FIG. 8 embodiment which is otherwise the same except outer expandable ring **42** is not shown because the required radial movement in FIG. 8 is much less than in FIG. 3. As a result in FIG. 8 the inner expandable ring **34** simply rides out on ramps **36** and **32** until contact is made with the borehole wall or tubular **54**. Ring **38** abuts ring **50** and does not go under ring **24** as in FIG. 3. The reach in FIG. 8 is much shorter than in FIG. 3.

[0025] FIGS. 4a and 4b show ring **34** in the run in and the set positions respectively. An outer face **60** continues along a tapered surface **62** to internal surface **64** seen as the inner parallel surface of a trapezoidal section in FIG. 3 and a continuous line in perspective in the views of FIG. 4. Slots **66** circumferentially alternate with slots **68** and are radially oriented to preferably align with the center of ring **34**. Slots **66** start at the outer face **60** and slots **68** start at the surface **64**. Slots **68** end in a transverse segment **70** and slots **66** end in a transverse segment **72**. The transverse segments are there to limit stress as the slots **66** and **68** open up as the sealing element **20** is set against the

borehole wall or tubular **54**. Outer expandable ring **42** is shown in perspective in FIG. 6 and essentially has a similar slot configuration as described in FIGS. 4a and 4b with the section profile being different as shown in FIGS. 2 and 3. However it is the same continuous 360 degree design for the ring **42** as the ring **34** with alternating slots with transverse end portions that start from opposing ends of the ring structure. Specifically, slots **80** and **82** start respectively at outer face **84** and inner dimension **86** seen as a ring in FIG. 6 and as a flat in section in FIG. 2. The slots extend radially and preferably in alignment with the center of ring **42**. Alternatively the slots can extend axially but radially is preferred. At the respective ends of slots **80** and **82** are transverse ends **88** and **90**. As ring **42** expands from the FIG. 2 to the FIG. 3 position, the slots **80** and **82** open up to allow the diameter to increase until surface **56** hits surface **58** of inner expandable ring **34** as shown in FIG. 3.

[0026] Rings **34** and **40** can be Teflon, metallic, composite to name a few examples. The shape can be created with lasers or wire EDM fabrication methods. Although in FIGS. 2 and 3 a single inner ring **34** and outer ring **40** are illustrated multiple pairs of such rings that function in the same way can be used. In the case of FIGS. 7 and 8 multiple pairs of expandable ring **36** and ramp ring **38** can be used and they can operate in the same manner as illustrated for a single such pair of rings as shown in FIGS. 7 and 8. The 360 degree design for rings **34** and **42** combined with solid expandable ring **24**, which prevents the rubber element **20** from escaping through cut slots in ring **34** and improves conformance to tubular or borehole inside diameter dramatically reduces extrusion of seal **20** even though the slots expand for the larger set position. The 360 degree feature of the rings **34**, **42** and **24**, if used, limit the extrusion gaps and allow a given sealing system **20** to be serviceable in higher pressure differential applications without extrusion risk. The design is modular so that it is simple to switch between the FIG. 2 and FIG. 7 configurations for different applications. The ring **42** backing up the ring **34** wedges ring **34** in the FIG. 3 set position wedges in ring **34** to hold it in position against high differential pressures that can exceed 10,000 PSI. The slot ends can be a transverse slot or an enlarged rounded end or other shape that limit stress concentration at the ends of the radial slots.

[0027] The above description is illustrative of the preferred embodiment and many modifications may be made by those skilled in the art without departing from the invention whose scope is to be determined from the literal and equivalent scope of the claims below:

We claim:

1. A expandable extrusion barrier ring assembly for a compression set sealing system for a borehole barrier, comprising:

   at least one continuous 360 ring (34,42) having an inner and outer face; **characterized by**

   a plurality of inner slots (68) extending from said inner face alternating with a plurality of outer slots (66) extending from said outer face.

2. The assembly of claim **1**, wherein:

   said inner (68) and outer slots (66) are oriented radially or axially.

3. The assembly of claim **2**, wherein:

   said inner (68) and outer slots (66) align with a center of said ring (34,42).

4. The assembly of claim **1**, wherein:

   said inner (68) and outer slots (66) extend circumferentially for 360 degrees of said ring (34,42).

5. The assembly of claim **1**, wherein:

   said inner (68) and outer slots (66) extend radially partly through said ring (34,42).

6. The assembly of claim **1**, wherein:

   said inner (68) and outer slots (66) have an end shape to reduce stress concentration as said ring (34,42) enlarges in diameter.

7. The assembly of claim **1**, wherein:

   said inner face of said ring (34,42) contacting a mandrel on the barrier for run in and pushed radially away from contact with said mandrel and against a borehole wall or surrounding tubular (54) in a set position.

8. The assembly of claim **7**, wherein:

   said ring (34,42) abutting a ramp ring (38) on said mandrel on one side and backup ring (24) having a taper on an opposite side such that said ring (34,42) moves away from said mandrel

by virtue of said ramp ring (38) and backup ring (24) moving closer to each other.

9. The assembly of claim **8**, wherein:

said ramp (38) and backup (24) rings have diverging tapers in a direction moving away from said mandrel such that said tapers radially wedge said ring (34,42) against the borehole wall or surrounding tubular (54).

10. The assembly of claim **9**, wherein:

said at least one ring (34,42) comprises an inner expandable backup ring (34) and an outer expandable backup ring (42) separated by said ramp ring (38);

said outer expandable backup ring (42) contacting said inner expandable backup ring (34) as both rings (34,42) move radially on opposed slopes of said ramp ring (38).

11. The assembly of claim **10**, wherein:

said outer expandable backup ring (42) is out of contact with the borehole wall or surrounding tubular (54) when contacting said inner expandable backup ring (34).

12. The assembly of claim **11**, wherein:

said ramp ring (38) moves between said mandrel and said backup ring (24) as said inner expandable backup ring (34) comes in contact with the borehole wall or the surrounding tubular (54).

13. The assembly of claim **11**, wherein:

said backup ring (24) attached to a sealing element (20) mounted to said mandrel;

said outer expandable backup ring (42) positioned between diverging tapers on said ramp ring (38) and a setting ring such that relative movement on said mandrel between said setting ring and said ramp ring (38) pushes said outer expandable backup ring (42) into said inner expandable backup ring (34).

14. The assembly of claim **9**, wherein:

said backup ring (24) attached to a sealing element (20) mounted to said mandrel;

said inner expandable backup ring (34) located between diverging tapers in a direction away from said mandrel on said ramp ring (38) and said backup ring (24) such that movement of said backup (24) and ramp (38) rings toward each other forces said inner expandable backup ring (34) away from said mandrel and against the borehole wall or surrounding tubular (54).

15. The assembly of claim **14**, wherein:

said at least one ring (34,42) comprises an inner expandable backup ring (34) and an outer expandable backup ring (42) separated by a ramp ring (38);

said outer expandable backup ring (42) contacting said inner expandable backup ring (34) as both inner and outer expandable backup rings (34,42) move radially on opposed slopes of said ramp ring (38).

16. The assembly of claim **9**, wherein:

said at least one ring (34,42) comprises two rings (34,42) with one each on opposed sides of a sealing element (20) for selective contact with a borehole wall or a surrounding tubular (54).

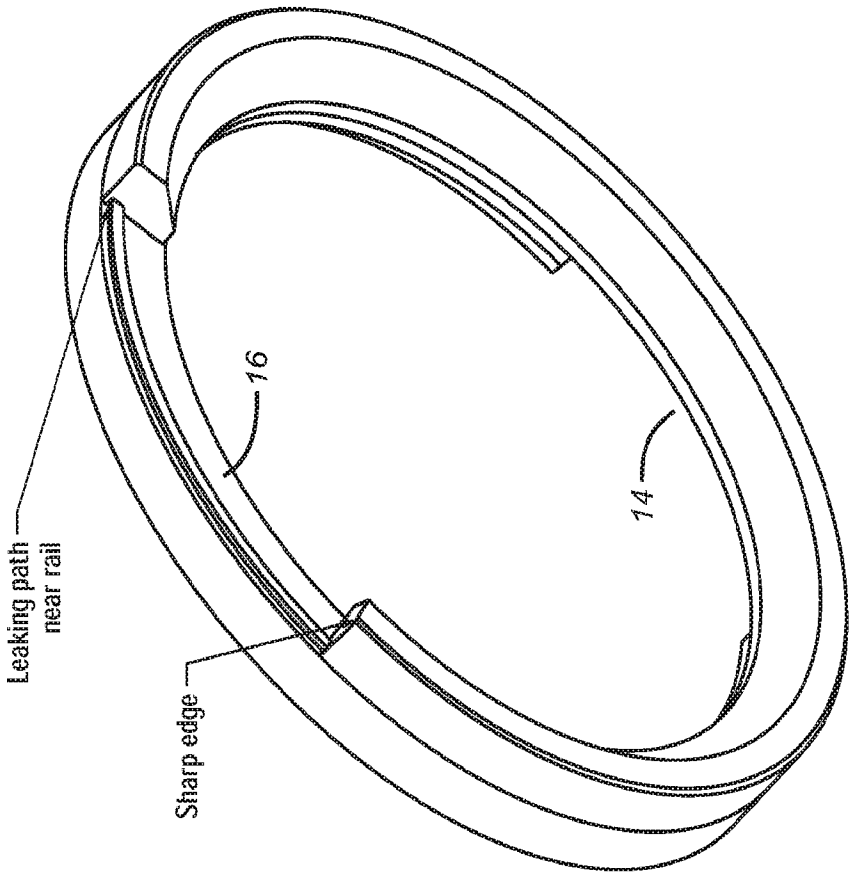

After setting
(PRIOR ART)

FIG. 1b

Backup rings used in Model 'D' Packer

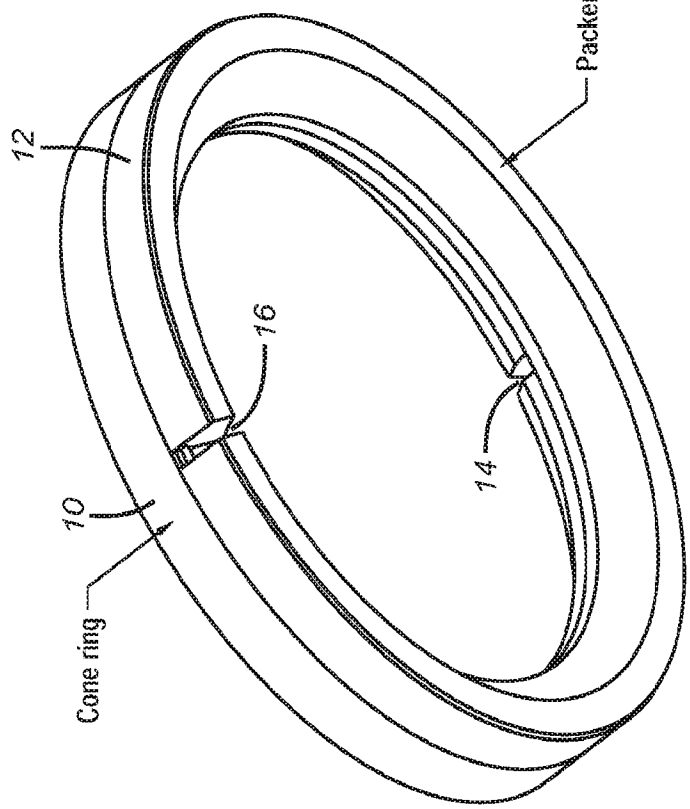

Before setting
(PRIOR ART)

FIG. 1a

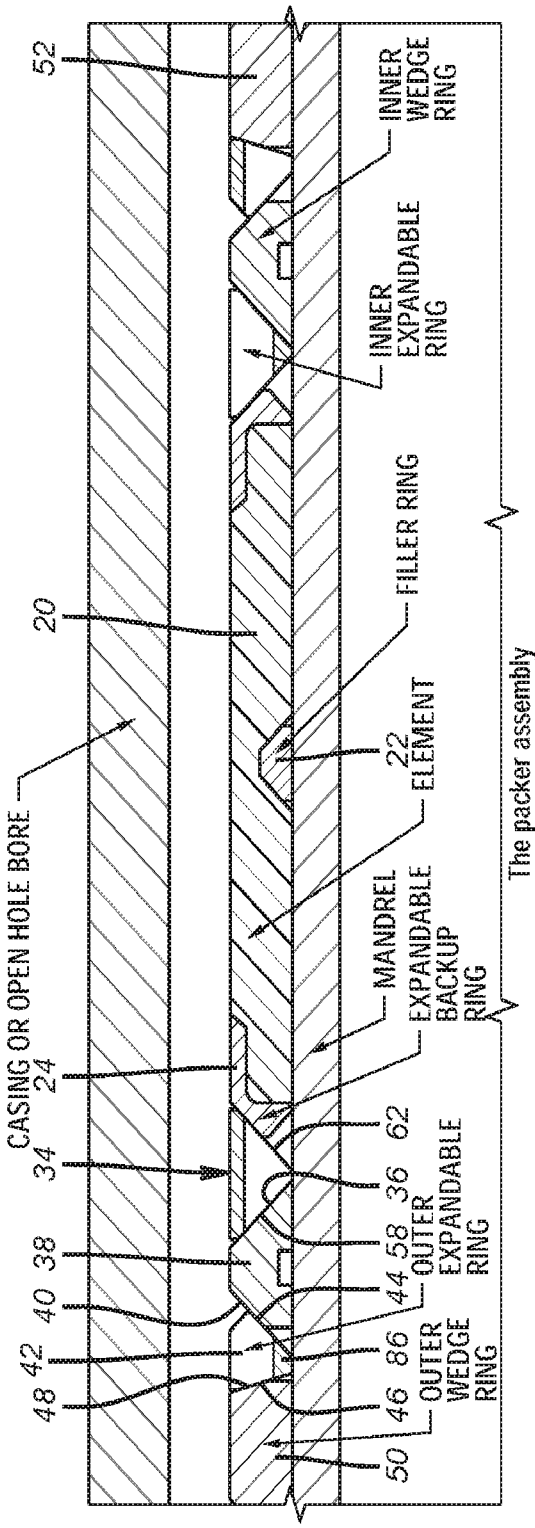
52
INNER WEDGE RING
INNER EXPANDABLE RING
FILLER RING
20
22 ELEMENT
MANDREL
EXPANDABLE BACKUP RING
CASING OR OPEN HOLE BORE
24
34
62
36
38
58
44
OUTER EXPANDABLE RING
40
42
86
OUTER WEDGE RING
48
46
50
The packer assembly

FIG. 2

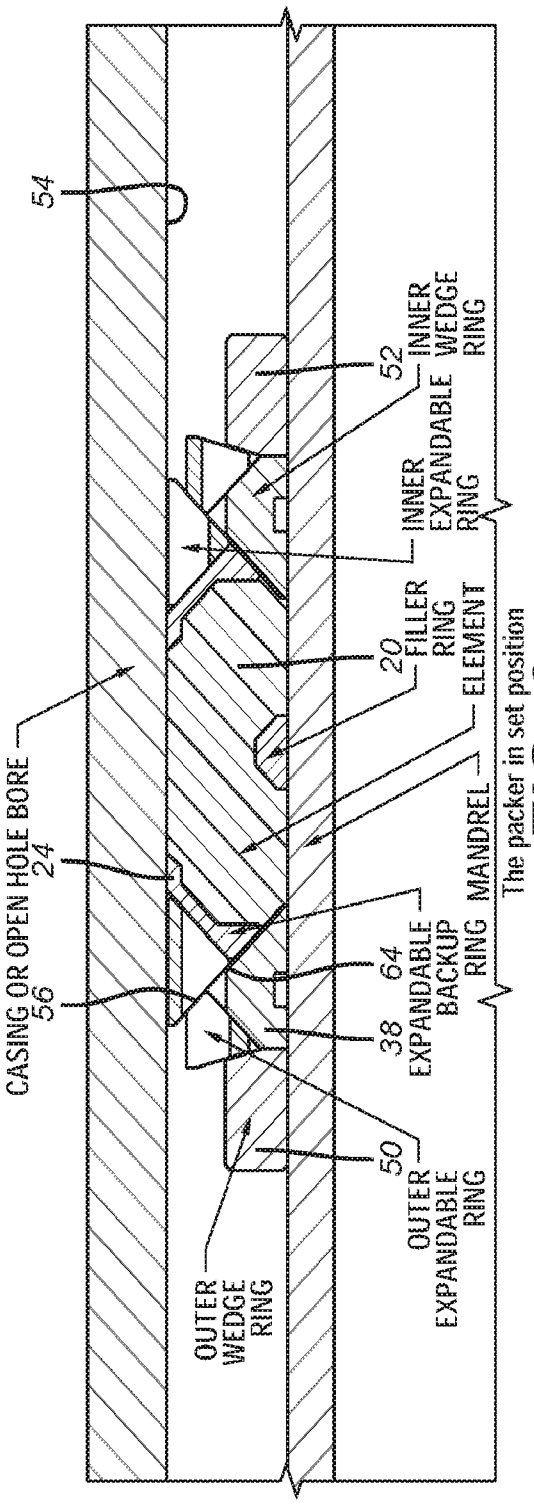
54
52
INNER WEDGE RING
INNER EXPANDABLE RING
20
FILLER RING
ELEMENT
CASING OR OPEN HOLE BORE
24
56
MANDREL
64
38
EXPANDABLE BACKUP RING
50
OUTER EXPANDABLE RING
OUTER WEDGE RING
The packer in set position

FIG. 3

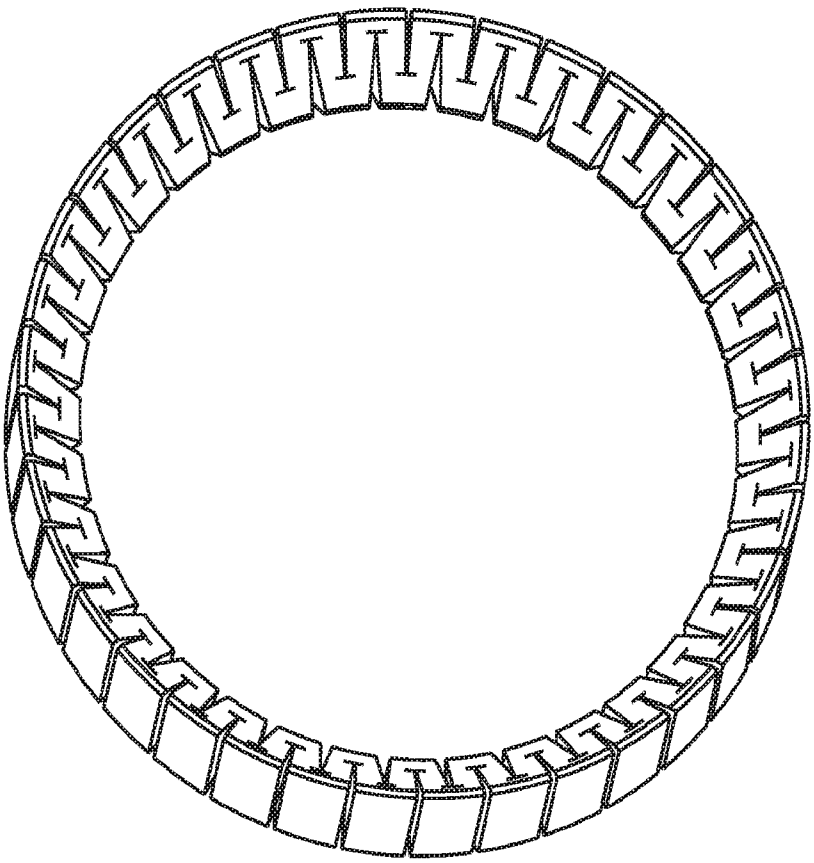

After setting

FIG. 4b

Inner expandable ring at run in position and setting position

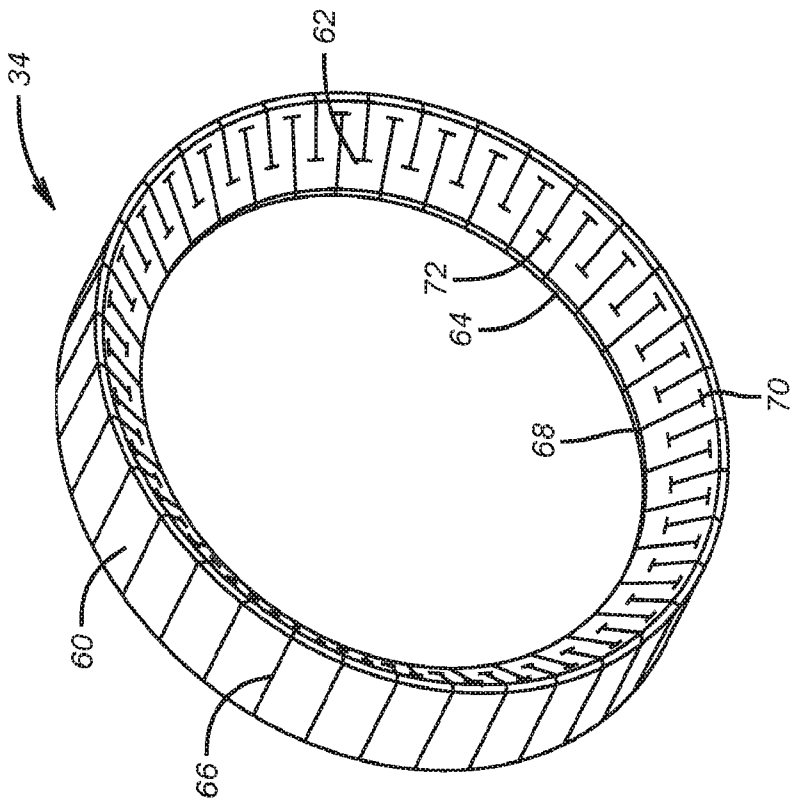

Before setting

FIG. 4a

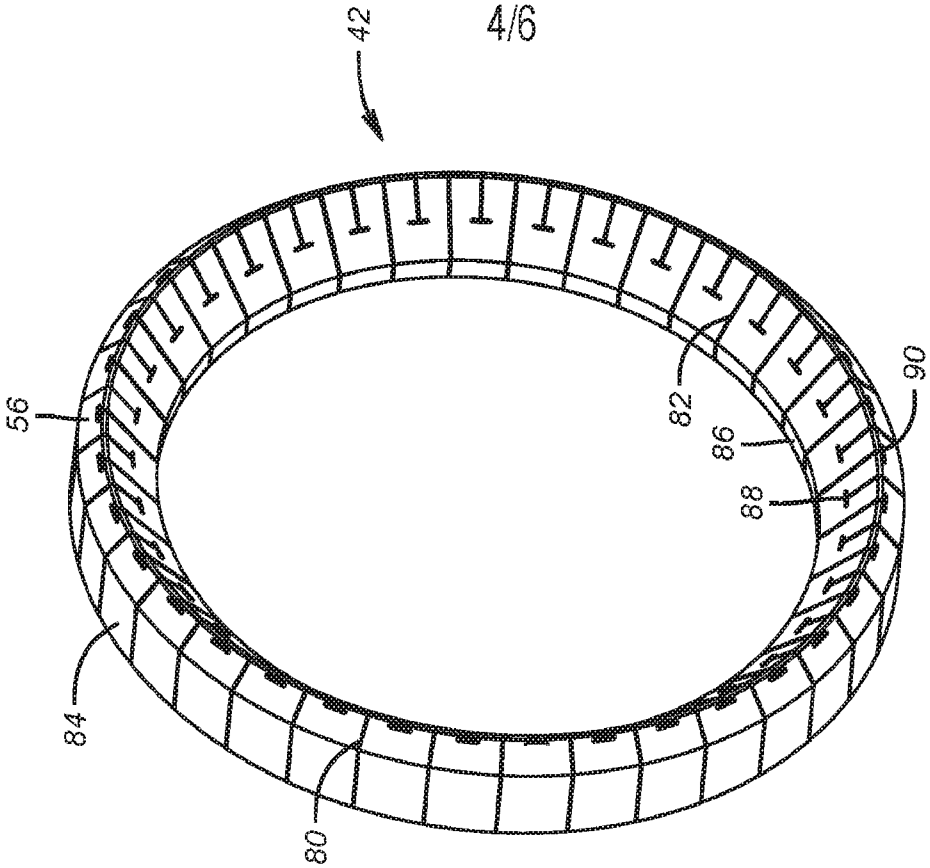

Outer Expandable Ring

FIG. 6

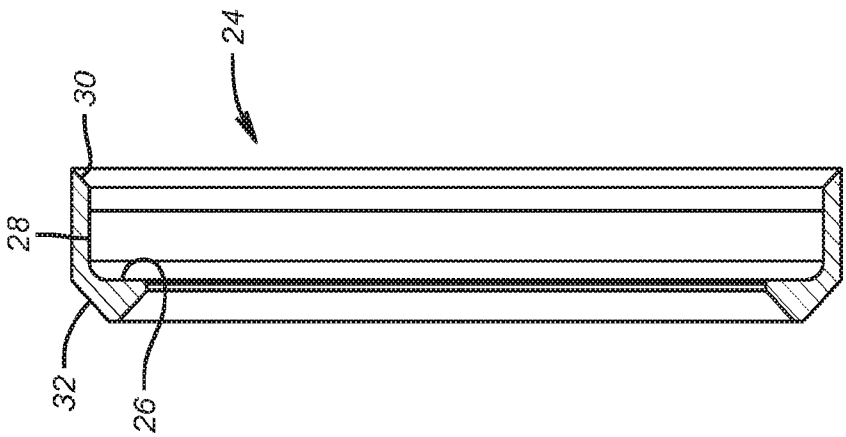

Expandable Backup Ring

FIG. 5

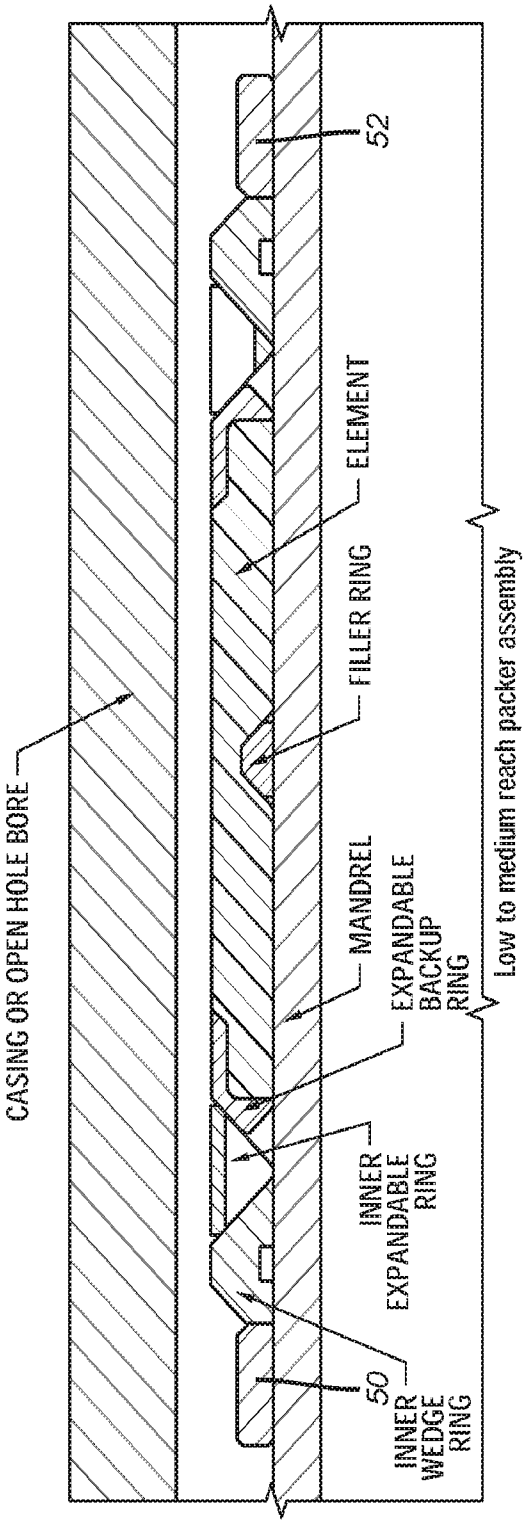
CASING OR OPEN HOLE BORE
52
ELEMENT
FILLER RING
MANDREL
EXPANDABLE BACKUP RING
INNER EXPANDABLE RING
50
INNER WEDGE RING
Low to medium reach packer assembly

FIG. 7

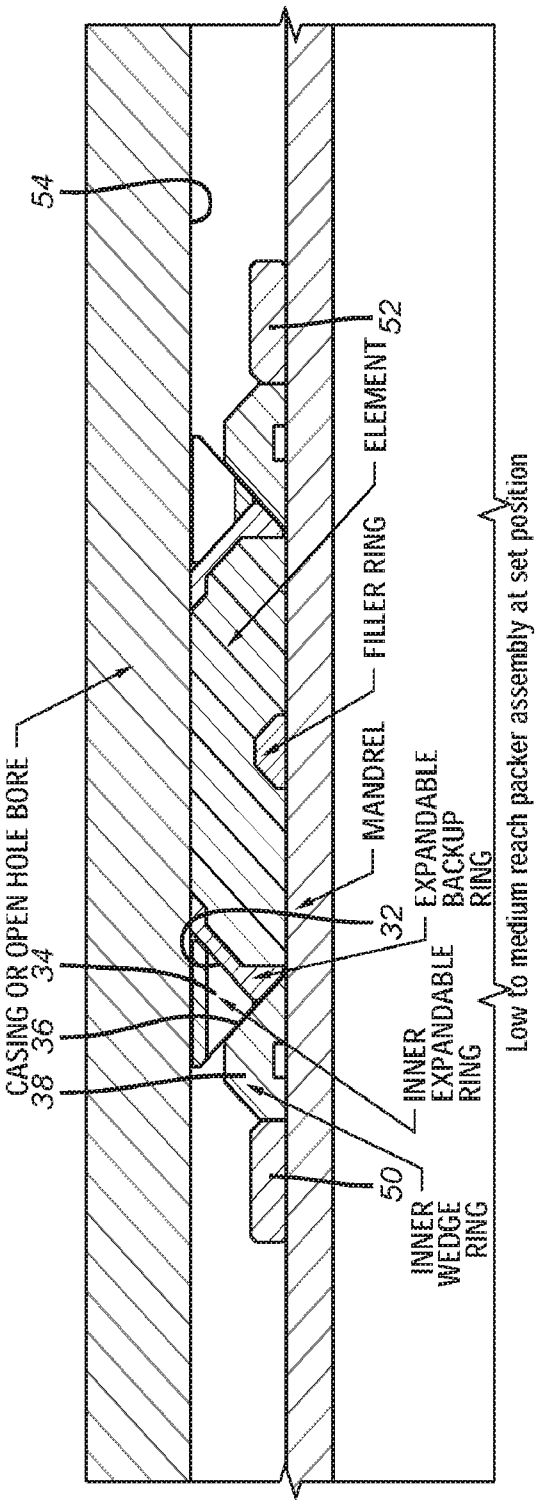
54
52
ELEMENT
FILLER RING
MANDREL
32
EXPANDABLE BACKUP RING
CASING OR OPEN HOLE BORE
34
36
38
INNER EXPANDABLE RING
50
INNER WEDGE RING
Low to medium reach packer assembly at set position

FIG. 8

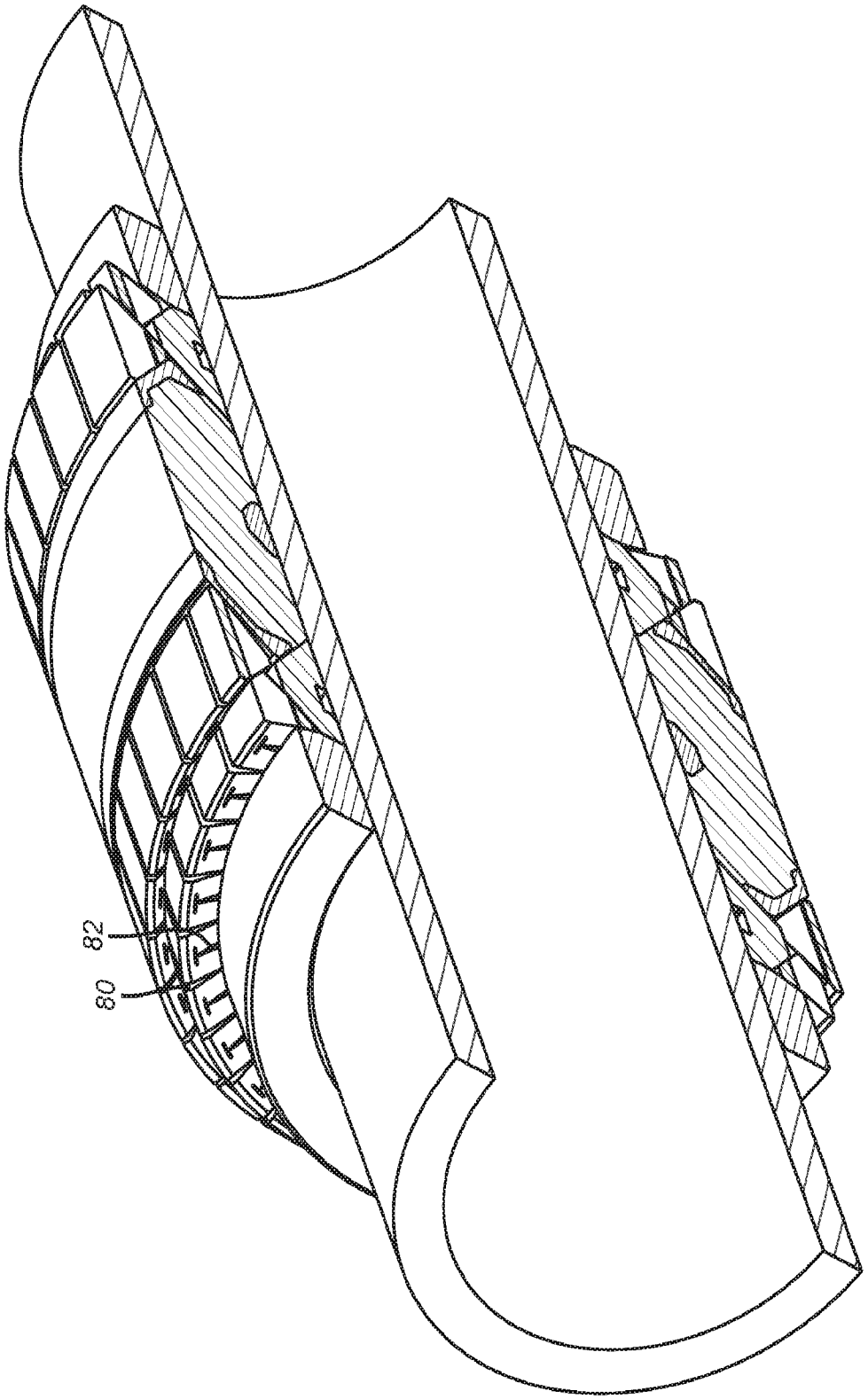

3D view when the packer in set position

FIG. 9

INTERNATIONAL SEARCH REPORT

International application No.
PCT/US2017/012127

A. CLASSIFICATION OF SUBJECT MATTER

E21B 33/12(2006.01)i, E21B 33/128(2006.01)i, E21B 17/00(2006.01)i

According to International Patent Classification (IPC) or to both national classification and IPC

B. FIELDS SEARCHED

Minimum documentation searched (classification system followed by classification symbols)
E21B 33/12; E21B 33/127; E21B 23/00; E21B 33/128; E21B 17/00

Documentation searched other than minimum documentation to the extent that such documents are included in the fields searched
Korean utility models and applications for utility models
Japanese utility models and applications for utility models

Electronic data base consulted during the international search (name of data base and, where practicable, search terms used)
eKOMPASS(KIPO internal) & Keywords: packer, anti-extrusion ring, inner slot, outer slot, sealing, ramp and backup ring

C. DOCUMENTS CONSIDERED TO BE RELEVANT

Category*	Citation of document, with indication, where appropriate, of the relevant passages	Relevant to claim No.
X	US 2009-0065191 A1 (REID et al.) 12 March 2009 See paragraphs [0066]-[0067], [0079], [0087] and figures 2-3, 6, 12-13.	1-6
Y		7-9,14
A		10-13,15-16
Y	US 2010-0186970 A1 (BURNETT et al.) 29 July 2010 See paragraphs [0043], [0051]-[0056] and figures 2-3.	7-9,14
A	US 2002-0043368 A1 (BELL et al.) 18 April 2002 See paragraphs [0032]-[0039], [0054] and figures 1-11.	1-16
A	US 2012-0217025 A1 (SHKURTI et al.) 30 August 2012 See paragraphs [0011], [0045] and figures 1, 4, 10-11.	1-16
A	US 2010-0038074 A1 (PATEL, DINESH R.) 18 February 2010 See paragraphs [0020]-[0030] and figures 1-10.	1-16

☐ Further documents are listed in the continuation of Box C.

☒ See patent family annex.

* Special categories of cited documents:
"A" document defining the general state of the art which is not considered to be of particular relevance
"E" earlier application or patent but published on or after the international filing date
"L" document which may throw doubts on priority claim(s) or which is cited to establish the publication date of another citation or other special reason (as specified)
"O" document referring to an oral disclosure, use, exhibition or other means
"P" document published prior to the international filing date but later than the priority date claimed
"T" later document published after the international filing date or priority date and not in conflict with the application but cited to understand the principle or theory underlying the invention
"X" document of particular relevance; the claimed invention cannot be considered novel or cannot be considered to involve an inventive step when the document is taken alone
"Y" document of particular relevance; the claimed invention cannot be considered to involve an inventive step when the document is combined with one or more other such documents,such combination being obvious to a person skilled in the art
"&" document member of the same patent family

Date of the actual completion of the international search	Date of mailing of the international search report
29 May 2017 (29.05.2017)	**29 May 2017 (29.05.2017)**

Name and mailing address of the ISA/KR
International Application Division
Korean Intellectual Property Office
189 Cheongsa-ro, Seo-gu, Daejeon, 35208, Republic of Korea
Facsimile No. +82-42-481-8578

Authorized officer
LEE, Chang Ho
Telephone No. +82-42-481-8288

INTERNATIONAL SEARCH REPORT

Information on patent family members

International application No.
PCT/US2017/012127

Patent document cited in search report	Publication date	Patent family member(s)	Publication date
US 2009-0065191 A1	12/03/2009	EP 2017432 A2	21/01/2009
		EP 2017432 A3	28/12/2016
		GB 2451099 A	21/01/2009
		GB 2451099 B	04/04/2012
		US 8327929 B2	11/12/2012
US 2010-0186970 A1	29/07/2010	GB 2467040 A	21/07/2010
		GB 2467040 B	14/11/2012
		NO 20100072 A	20/07/2010
		US 8276678 B2	02/10/2012
US 2002-0043368 A1	18/04/2002	AT 273441 T	15/08/2004
		DE 60104793 T2	18/08/2005
		EP 1197632 A2	17/04/2002
		EP 1197632 A3	05/03/2003
		EP 1197632 B1	11/08/2004
		US 6598672 B2	29/07/2003
US 2012-0217025 A1	30/08/2012	US 8701787 B2	22/04/2014
		WO 2012-118772 A2	07/09/2012
		WO 2012-118772 A3	28/02/2013
US 2010-0038074 A1	18/02/2010	US 7938176 B2	10/05/2011
		WO 2010-019819 A1	18/02/2010