Dec. 30, 1947.

A. B. ATKINSON

2,433,330

TONE CONTROL ARRANGEMENT

Filed Feb. 16, 1943

FIG. 1.

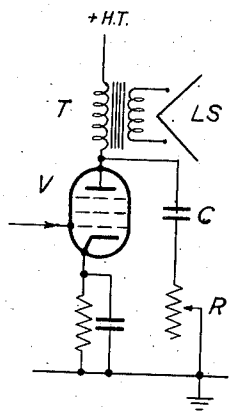

FIG. 2.

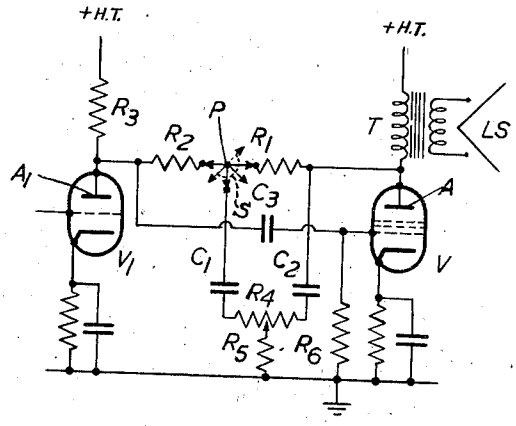

Inventor

Alan Baxter Atkinson

By George J. Hyde

Attorney

Patented Dec. 30, 1947

2,433,330

UNITED STATES PATENT OFFICE

2,433,330

TONE CONTROL ARRANGEMENT

Alan Baxter Atkinson, Sidcup, England, assignor to Standard Telephones and Cables Limited, London, England, a British company

Application February 16, 1943, Serial No. 476,067
In Great Britain February 20, 1942

2 Claims. (Cl. 179—171)

1

The present invention relates to tone control circuits for radio receiving sets and the like.

In broadcast receiving sets it is frequently the practice to provide an adjustable circuit shunting the anode circuit of the output valve to give a variable attenuation for the higher audio frequencies, so that the user may modify the quality of tone produced by the loudspeaker. When negative feedback is used in radio receivers, the application of this simple method of tone control becomes difficult, and it is the object of the present invention to provide an equally simple arrangement applicable to receiver circuits employing feedback, which moreover, gives additional facilities.

According to the invention, there is provided a radio receiving set comprising an output valve amplifying stage working into a load connected to the anode circuit, a preceding valve amplifying stage coupled thereto, and a feedback circuit connecting the anodes of the valves, the said feedback circuit comprising an attenuating circuit having an adjustable member, characterised in this, that adjustment of the said member to one limit of its range causes the level of the high frequencies delivered to the load to be raised relatively to that of the low frequencies, and adjustment to the other limit of the range causes the said level of the high frequencies to be lowered.

The invention will be understood from the following description which refers to the accompanying drawing, in which:

Fig. 1 shows a schematic circuit diagram of a tone control arrangement typical of the prevailing practice hitherto; and

Fig. 2 shows a schematic circuit diagram of a tone control arrangement applied to a receiver circuit employing negative feedback, according to the invention.

In Fig. 1 there is shown an example of a commonly used tone control circuit. The valve V is the output valve of the receiver and the anode circuit is connected in the usual way through a transformer T to a loudspeaker LS. The valve V will generally be a pentode with an indirectly heated cathode as shown, biassed with the conventional condenser-shunted resistance.

The tone control circuit comprises a condenser C and a resistance R connected in series, and shunting the anode circuit. It is usually arranged so that either R or C may be adjusted, either in steps, or continuously; generally R is variable and may consist of a carbon track rheostat adjustable from zero to, say, 100,000 ohms. The values of R and C are also usually chosen so

2

that when R has its maximum value, the load shunting the output transformer T limits the increase with frequency of the impedance of the loudspeaker as presented to the anode circuit through the transformer T.

This method of tone control has several defects, among which are the following:

1. The load presented to the anode circuit of the valve is varied by adjustment of the resistance R, and serious distortion in the range of the attenuated frequencies may occur, and modulation products may be produced;

2. At any setting of the variable element R, the rate of change of attenuation with frequency is small and control of the higher frequencies undesirably affects the intermediate frequencies.

These defects are greatly accentuated when negative feedback is employed. The attenuation introduced in the anode circuit tends to be reduced by the action of the feedback, so that the desired attenuation can only be obtained by the use of extreme values for R and C, resulting in the introduction of the above-mentioned defects in aggravated form.

The manner in which these difficulties may be overcome according to the invention is shown in Fig. 2. The output stage comprises the valve V as in Fig. 1, together with the transformer T and loudspeaker LS. The preceding stage comprising a valve V_1 is likewise shown, the anode A_1 being coupled to the grid of V by means of the usual condenser C3 and grid leak resistance R6. The anode A_1 is connected to the high tension supply through a resistance R3. Both the cathodes are biassed with the usual condenser-shunted resistance.

So far, the circuit is conventional, and its operation is well known. The invention lies in the provision of the adjustable feedback circuit comprising resistances R_1, R_2, R_4 and R_5, and condensers C_1 and C_2, which form an attenuator connecting the anodes A and A_1, and earth (or other point of constant potential). R_4 is an adjustable potentiometer which enables the frequency characteristic of the attenuation to be varied within wide limits. It will be seen that the tone control features of Fig. 1 are retained, since the condenser C_2 and the resistance R_5 and part of R_4 correspond with C and R. When the sliding contact of R_4 is at the C_2 end, there will be maximum attenuation of the higher frequencies in the load as before; and moreover, the attenuation of the feedback circuit increases with frequency and is a maximum for any given frequency when the sliding contact is at the C_1 end. This means

that the overall gain of the amplifier, taking into account the feedback, will be a maximum also. Thus it will be seen that the arrangement provides the possibility of raising or lowering the level of the high frequencies with respect to the low frequencies, according to the setting of the contact on R_4. By suitable choice of the values of the components, a wide range of adjustment can be provided.

In radio receivers designed to handle several different wave bands, it is sometimes preferable to dispense with feedback when operating in one or more of the bands of shorter wavelengths. The circuit of Fig. 2 is well adapted for this type of receiver, because, as can clearly be seen, the feedback circuit can be easily disconnected by a simple switch S, designed, for example, to break the connections at the point P, leaving the tone control operating as in Fig. 1.

What is claimed is:

1. In an audio-amplifier, an anode load circuit, an input grid circuit, a negative feedback circuit comprising two resistances in series and coupling anode and grid circuit, an attenuating circuit in shunt to one of said resistances, comprising a resistance potentiometer having a sliding contact connected through a fixed resistance to a point of constant potential, one end of the potentiometer being connected to the anode, said connection including a condenser, the other end of the potentiometer being connected to the junction point of the series resistances, said connection including a further condenser to vary its frequency characteristic between maximum attenuation and maximum output at a given high frequency of the range, at the one limit, and minimum attenuation at said frequency, at the other limit.

2. An audio-amplifier comprising an output valve amplifying stage working into a load connected to its anode circuit, a preceding valve amplifying stage, means for coupling said output stage with the preceding stage, a feedback circuit feeding back part of the output stage to the grid of said stage, an attenuating circuit including a resistance potentiometer having a sliding contact connected to a point of constant potential, said connection including a fixed resistance, one end of the potentiometer being connected to the anode of the output valve, said connection including a condenser, means including two series-connected resistances connected to the anodes of the two stages, the junction point of the series resistance being connected to the other end of the potentiometer, said connection including a further condenser, and switching means for disconnecting the feedback circuit by breaking the connections at the junction point.

ALAN BAXTER ATKINSON.

REFERENCES CITED

The following references are of record in the file of this patent:

UNITED STATES PATENTS

Number	Name	Date
2,217,267	Eisele	Oct. 8, 1940
2,264,715	Rohr	Dec. 2, 1941
2,256,072	Bruck	Sept. 16, 1941
2,261,356	Foster	Nov. 4, 1941
2,065,344	Newton	Dec. 22, 1936